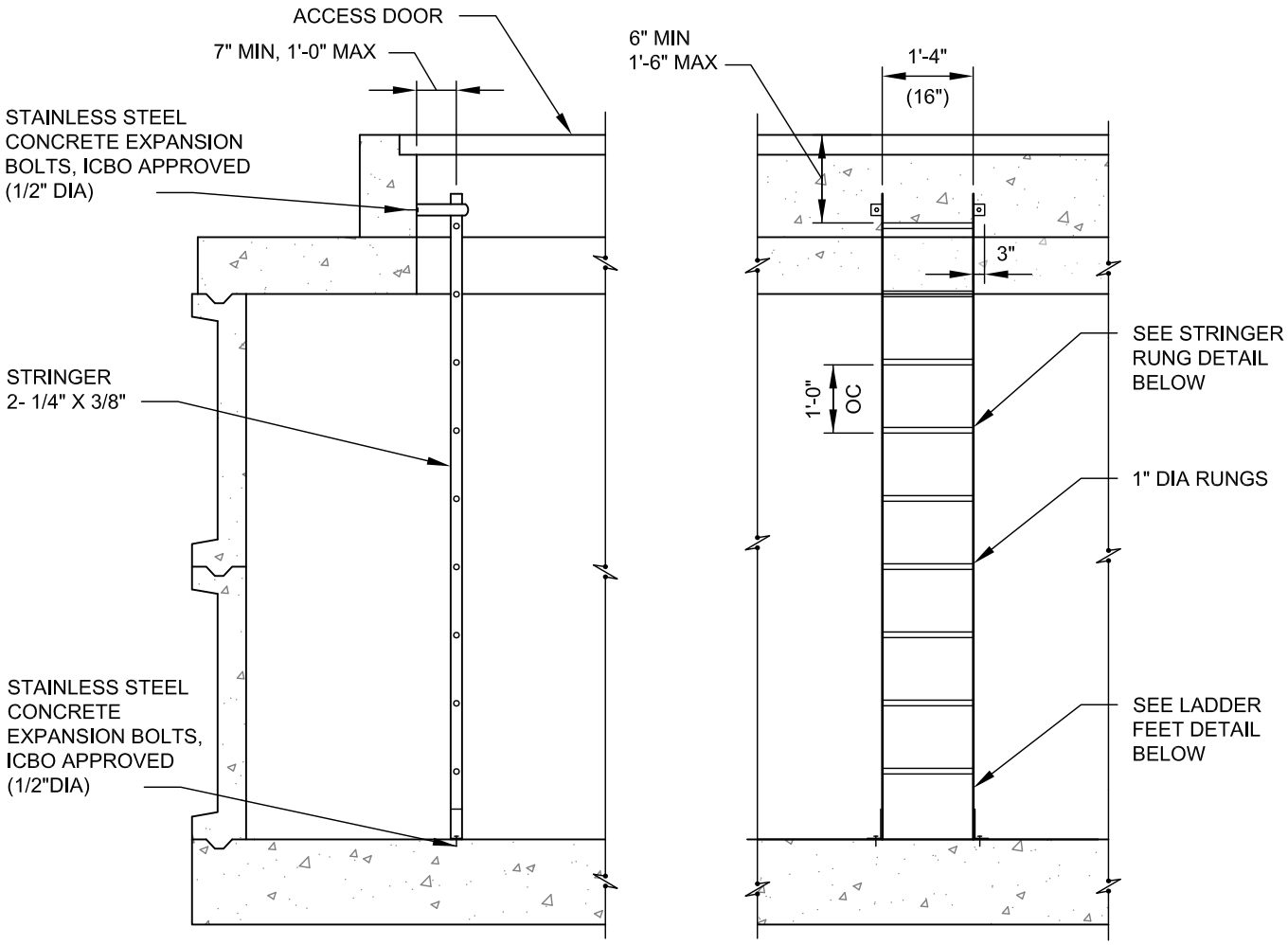

NOTES:

ALL RUNGS SHALL BE CORREGATED, KNURLED, DIMPLED, COATED WITH SKID-RESISTANT MATERIAL, OR OTHERWISE TREATED TO MINIMIZE SLIPPING.

ALUMINUM LADDER SECTION

NTS

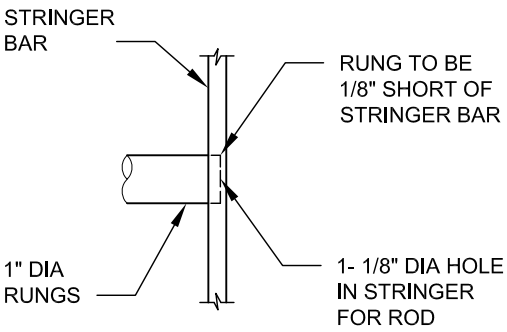

STRINGER / RUNG DETAIL

NTS

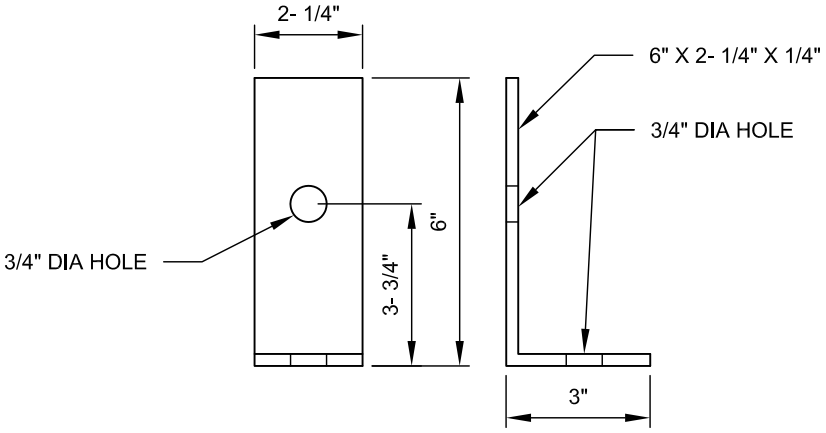

LADDER FEET DETAIL

NTS

Scott Thomasson

APPROVED BY: SCOTT THOMASSON
WATER/WASTEWATER ENGINEERING MANAGER

REVISION DATE: JULY 01, 2015

CityofRedmond WASHINGTON

STANDARD DETAILS

WATER METER VAULT AND PRV STATION LADDER DETAILS

FILE NAME: SD710B.DWG

DETAIL NUMBER: **710B**