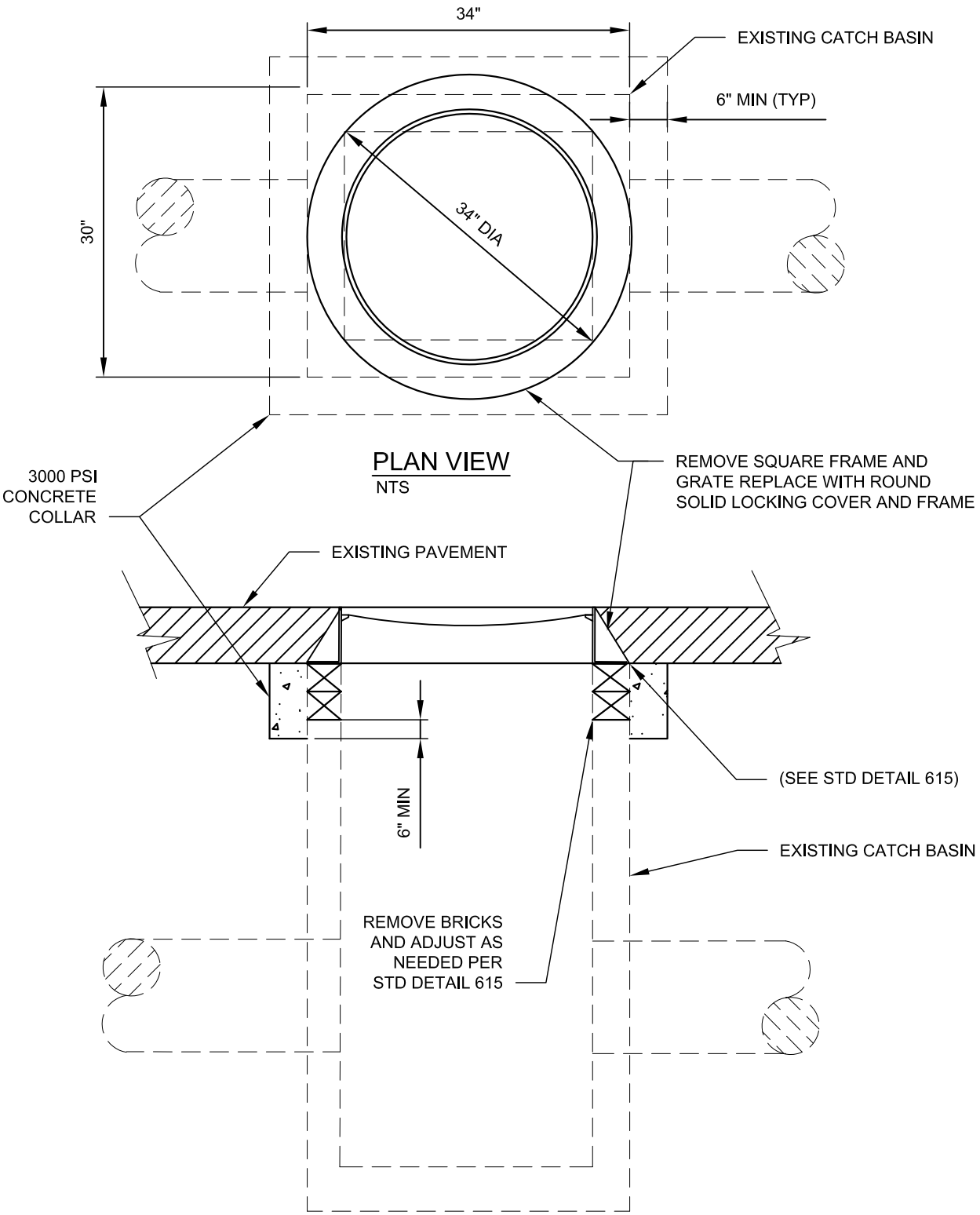

Gary M. Schimek

APPROVED BY: GARY M. SCHIMEK
NATURAL RESOURCES/STORMWATER ENGINEERING MANAGER

REVISION DATE: JULY 01, 2015

CityofRedmond WASHINGTON

STANDARD DETAILS

REPLACE FRAME & GRATE WITH RING & COVER

FILE NAME: SD631.DWG

DETAIL NUMBER: **631**