DRAWN BY: MARK SUJKA

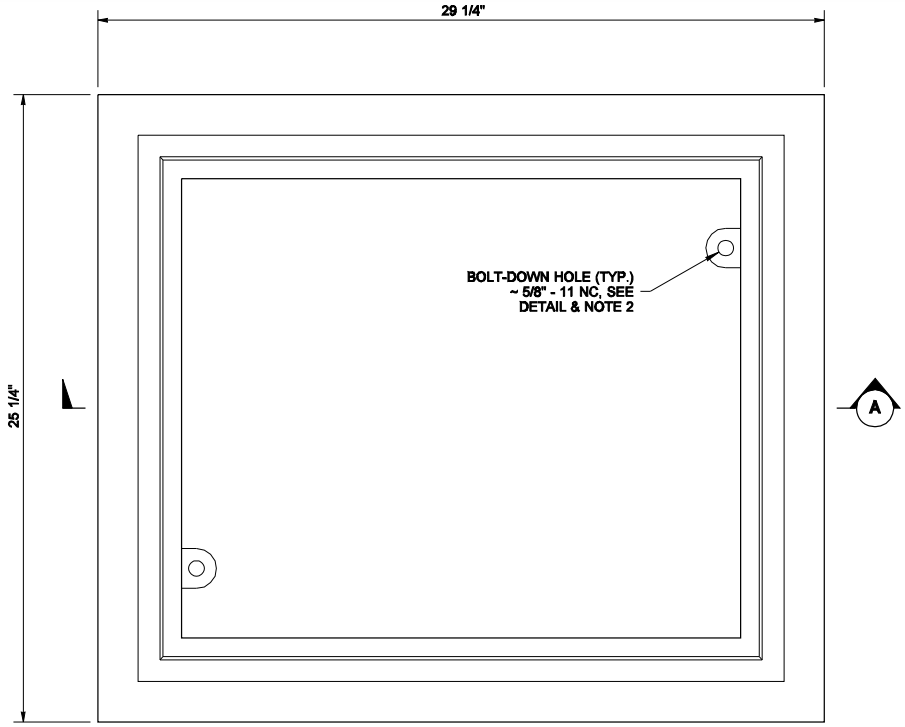


TOP

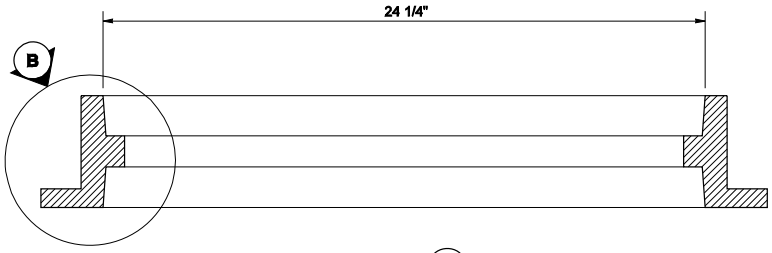


SECTION A

## NOTES

1. This frame is designed to accommodate 20" × 24" grates or covers as shown on Standard Plans B-30.20, B-30.30, B-30.40 and B-30.50.
2. When bolt-down grates or covers are specified in the Contract, provide two holes in the frame that are vertically aligned with the grate or cover slots. Tap each hole to accept a 5/8" - 11 NC × 2" allen head cap screw. Location of bolt down holes varies among different manufacturers.
3. Refer to Standard Specification 9-05.15(2) for additional requirements.

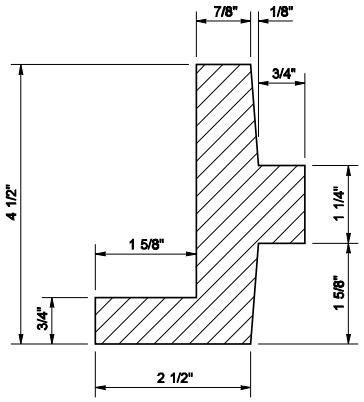


DETAIL B

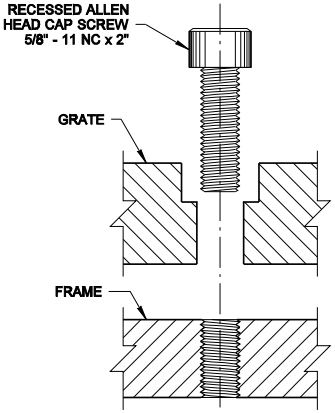


SECTION

**BOLT-DOWN DETAIL**
SEE NOTE 2

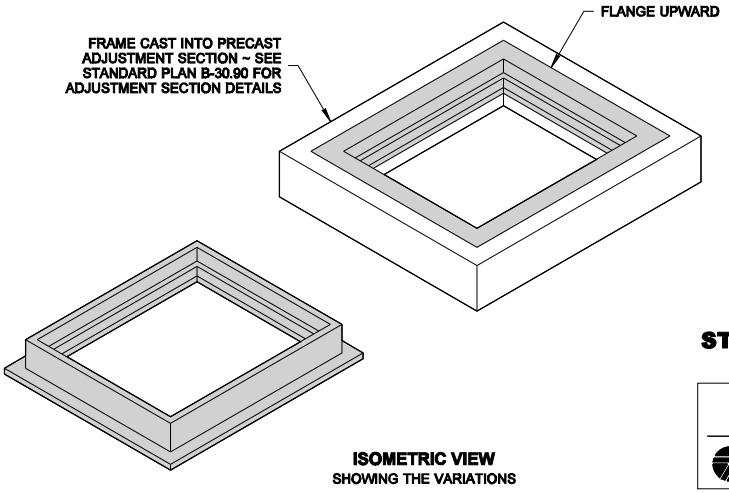


**ISOMETRIC VIEW**
SHOWING THE VARIATIONS

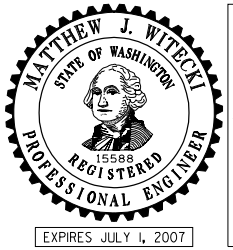


NOTE: THIS PLAN IS NOT A LEGAL ENGINEERING DOCUMENT BUT AN ELECTRONIC DUPLICATE. THE ORIGINAL, SIGNED BY THE ENGINEER AND APPROVED FOR PUBLICATION, IS KEPT ON FILE AT THE WASHINGTON STATE DEPARTMENT OF TRANSPORTATION. A COPY MAY BE OBTAINED UPON REQUEST.

# RECTANGULAR FRAME (REVERSIBLE)

## STANDARD PLAN B-30.10-00

SHEET 1 OF 1 SHEET

APPROVED FOR PUBLICATION

*Harold J. Peterfeso* — STATE DESIGN ENGINEER — *06-08-06* — DATE

Washington State Department of Transportation