DRAWN BY: MARK SUJKA

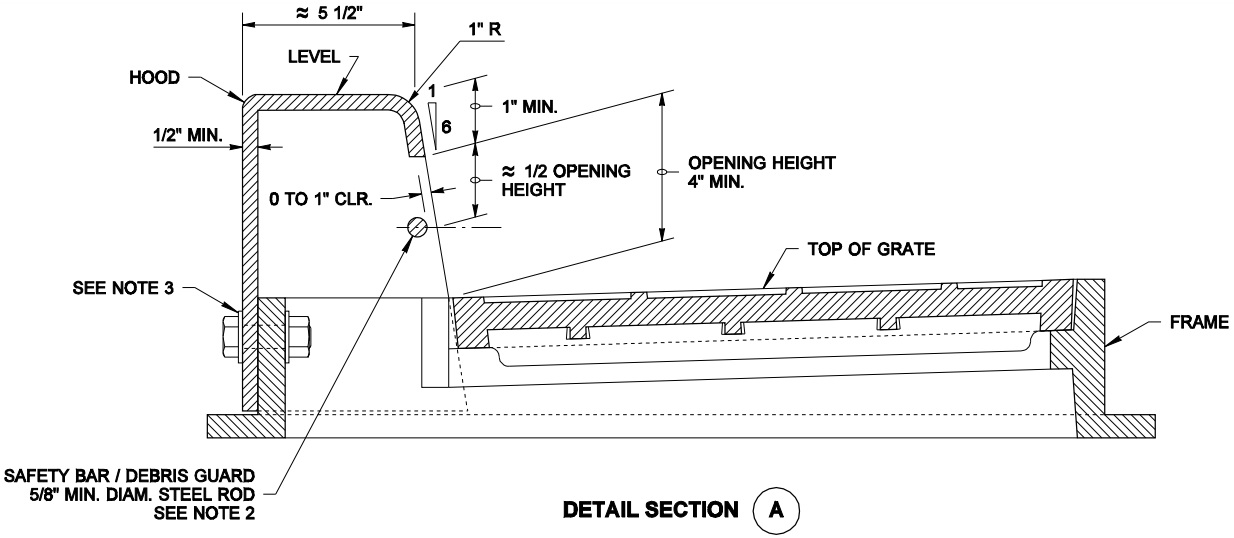

DETAIL SECTION (A)

NOTES

1. The asymmetry of the Combination Inlet shall be considered when calculating the offset distance for the catch basin. See **SECTION A**.
2. The dimensions of the Frame and Hood may vary slightly among different manufacturers. The Frame may have cast features intended to support a grate guard. Hood units shall mount outside of the Frame. The methods for fastening the Safety Bar / Debris Guard Rod to the Hood may vary. The Hood may include casting lugs. The top of the Hood may be cast with a pattern.
3. Attach the Hood to the frame with two 3/4" × 2" hex head bolts, nuts, and oversize washers. The washers shall have diameters adequate to assure full bearing across the slots.
4. When bolt-down grates are specified in the contract, provide two holes in the frame that are vertically aligned with the grate slots. Tap each hole to accept a 5/8" × - 11 NC × 2" allen head cap screw. Location of bolt-down holes varies among different manufacturers. See **BOLT- DOWN DETAIL** , Standard Plan B-30.10.
5. Only ductile iron Vaned Grates shall be used. See Standard Plans B-30.30 and B-30.40 for grate details. Refer to Standard Specification 9-05.15(2) for additional requirements.
6. This plan is intended to show the installation details of a manufactured product. It is not the intent of this plan to show the specific details necessary to fabricate the castings shown on this drawing.

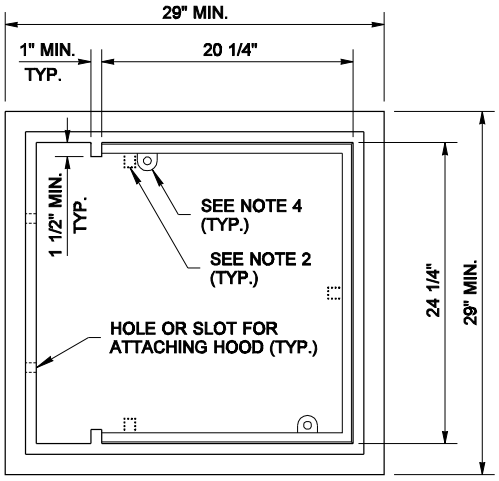

TOP VIEW

FRAME DETAIL

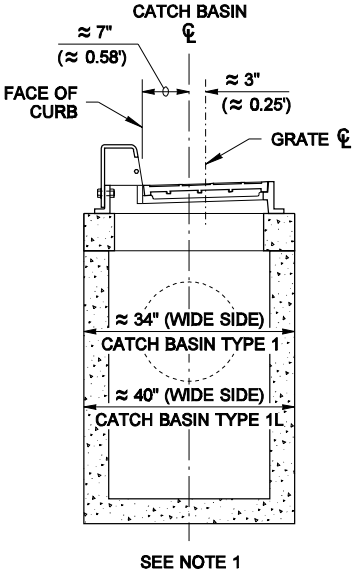

SECTION (A)

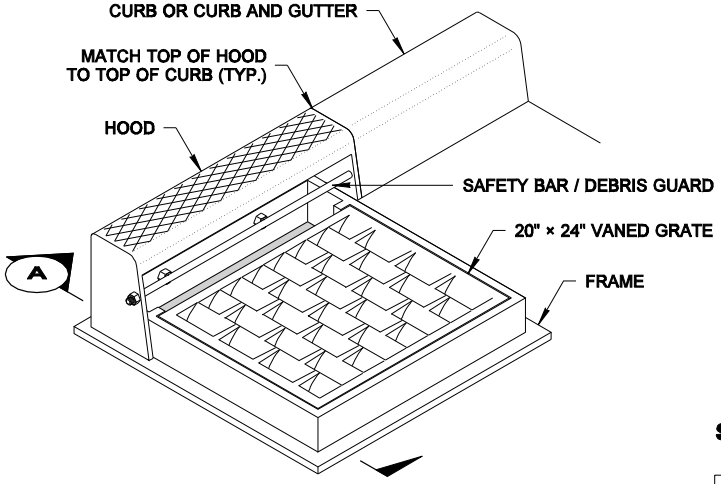

ISOMETRIC VIEW

COMBINATION INLET

FRAME, HOOD, AND VANED GRATE

NOTE: THIS PLAN IS NOT A LEGAL ENGINEERING DOCUMENT BUT AN ELECTRONIC DUPLICATE. THE ORIGINAL, SIGNED BY THE ENGINEER AND APPROVED FOR PUBLICATION, IS KEPT ON FILE AT THE WASHINGTON STATE DEPARTMENT OF TRANSPORTATION. A COPY MAY BE OBTAINED UPON REQUEST.

COMBINATION INLET

STANDARD PLAN B-25.20-00

SHEET 1 OF 1 SHEET

APPROVED FOR PUBLICATION

Harold J. Peterfeso — STATE DESIGN ENGINEER — *06-08-06* DATE

Washington State Department of Transportation