DRAWN BY: MARK SUJKA

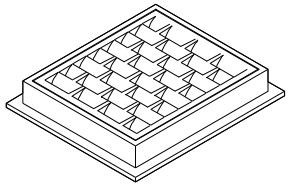

FRAME AND VANED GRATE

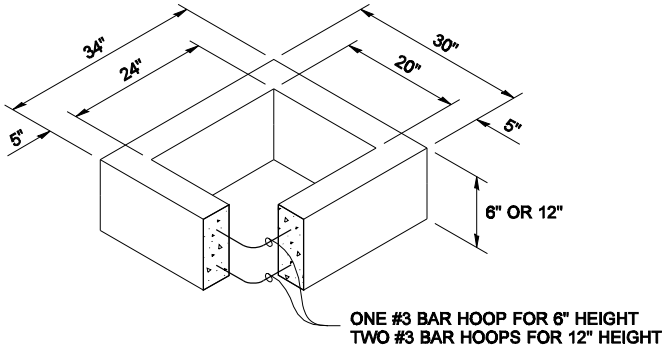

RECTANGULAR ADJUSTMENT SECTION

PIPE ALLOWANCES	
PIPE MATERIAL	MAXIMUM INSIDE DIAMETER
REINFORCED OR PLAIN CONCRETE	12"
ALL METAL PIPE	15"
CPSSP * (STD. SPEC. 9-05.20)	12"
SOLID WALL PVC (STD. SPEC. 9-05.12(1))	15"
PROFILE WALL PVC (STD. SPEC. 9-05.12(2))	15"

* CORRUGATED POLYETHYLENE STORM SEWER PIPE

NOTES

1. As acceptable alternatives to the rebar shown in the **PRECAST BASE SECTION**, fibers (placed according to the Standard Specifications), or wire mesh having a minimum area of 0.12 square inches per foot shall be used with the minimum required rebar shown in the **ALTERNATIVE PRECAST BASE SECTION**. Wire mesh shall not be placed in the knockouts.
2. The knockout diameter shall not be greater than 20". Knockouts shall have a wall thickness of 2" minimum to 2.5" maximum. Provide a 1.5" minimum gap between the knockout wall and the outside of the pipe. After the pipe is installed, fill the gap with joint mortar in accordance with Standard Specification 9-04.3.
3. The maximum depth from the finished grade to the lowest pipe invert shall be 5'.
4. The frame and grate may be installed with the flange up or down. The frame may be cast into the adjustment section.
5. The Precast Base Section may have a rounded floor, and the walls may be sloped at a rate of 1:24 or steeper.
6. The opening shall be measured at the top of the precast base section.
7. All pickup holes shall be grouted full after the basin has been placed.

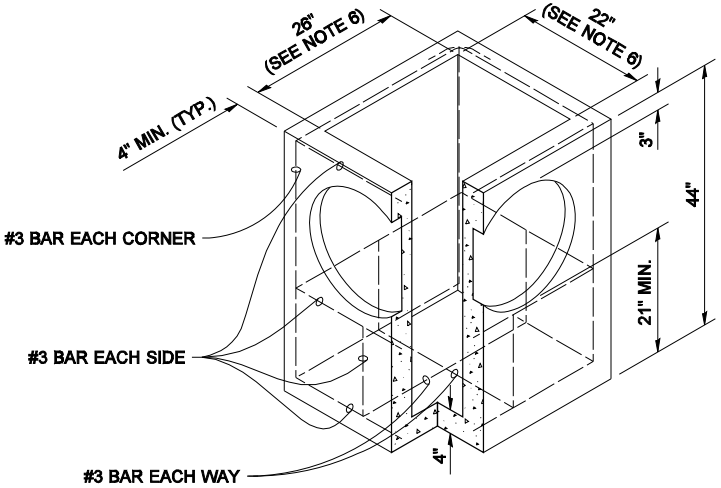

PRECAST BASE SECTION

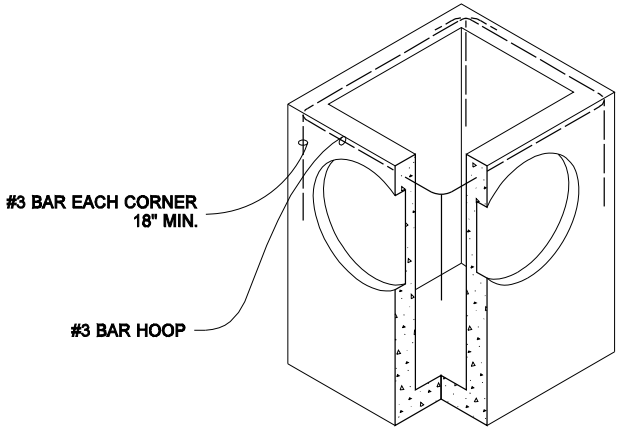

SEE NOTE 1

ALTERNATIVE PRECAST BASE SECTION

NOTE: THIS PLAN IS NOT A LEGAL ENGINEERING DOCUMENT BUT AN ELECTRONIC DUPLICATE. THE ORIGINAL, SIGNED BY THE ENGINEER AND APPROVED FOR PUBLICATION, IS KEPT ON FILE AT THE WASHINGTON STATE DEPARTMENT OF TRANSPORTATION. A COPY MAY BE OBTAINED UPON REQUEST.

CATCH BASIN TYPE 1

STANDARD PLAN B-5.20-00

SHEET 1 OF 1 SHEET

APPROVED FOR PUBLICATION

Harold J. Peterfeso — STATE DESIGN ENGINEER

06-01-06 — DATE

Washington State Department of Transportation