Transportation Impact Analysis

THE BOND

Prepared for:
Main Street Property Group, LLC

May 2016

Prepared by:

transpogroup
WHAT TRANSPORTATION CAN BE.

11730 118th Avenue NE, Suite 600
Kirkland, WA 98034-7120
Phone: 425-821-3665
Fax: 425-825-8434
www.transpogroup.com

15525.00

© 2016 Transpo Group

Table of Contents

Introduction **1**
Project Description 1
Study Scope 1

Existing & Future Without-Project Conditions **4**
Street System 4
Transit Service 4
Non-Motorized Facilities 5
Traffic Volumes 5
Traffic Operations 8
Traffic Safety 8

Project Impacts **10**
Trip Generation 10
Trip Distribution & Assignment 10
Traffic Volume Impact 12
Traffic Operations Impact 12
Site Access Evaluation 14
Parking 14

Mitigation **16**
Transportation Impact Fees 16

Findings and Recommendations **17**

Appendix

Appendix A: Traffic Counts
Appendix B: LOS Definitions
Appendix C: LOS Worksheets
Appendix D: Sight Distance Triangles

Figures

Figure 1. Site Vicinity & Study Intersections 2
Figure 2. Preliminary Site Plan 3
Figure 3. Existing and Future (2019) Without-Project Weekday PM Peak Hour Traffic Volumes 7
Figure 4. Weekday PM Peak Hour Trip Distribution & Assignment 11
Figure 5. Future (2019) With-Project Weekday Peak Hour Traffic Volumes 13

Tables

Table 1. Study Area Existing Street System Summary 4
Table 2. Existing and Future Weekday PM Peak Hour Intersection LOS Summary 8
Table 3. Three-Year Collision Summary – 2013 to 2015 9
Table 4. Estimated Weekday Vehicle Trip Generation[1] 10
Table 5. Traffic Volume Impacts at Study Intersections 12
Table 6. Existing and Future Weekday PM Peak Hour Intersection LOS Summary 12

Introduction

This transportation impact analysis (TIA) identifies potential transportation-related impacts associated with the construction of a residential apartment project containing up to 139 units. The project is located along East Lake Sammamish Parkway NE about a quarter-mile south of NE 65th Street in Redmond, WA. As necessary, mitigation measures are identified that would offset or reduce significant transportation related impacts that the project may have on the surrounding transportation system.

Project Description

The proposed project is located at 6000 East Lake Sammamish Parkway NE and would include the development of 139 apartment units.[1] Figure 1 illustrates the site vicinity and surrounding streets and Figure 2 shows a preliminary site plan. It is anticipated that the development would be built and occupied by 2019. Although a few single family houses currently occupy the project site, no credit for existing land use was considered for the project and thus provides a conservative analysis.

The proposed project would provide 171 parking stalls accommodated by structured parking beneath each building and surface stalls between the buildings. Of these parking stalls, 34 would be tandem parking stalls (17 tandem spaces serving up to 34 vehicles). Residents would be required to pay a monthly fee of $95 to use each of parking stall.

Access to the project site would be provided via a single driveway on East Lake Sammamish Parkway NE. The project would also provide a non-motorized connection from the project site to Redmond-Fall City Road NE, near the 185th Avenue NE/ Redmond-Fall City Road NE intersection. In addition, on-street frontage improvements along East Lake Sammamish Parkway NE would be completed with the project, including extending the two-way left-turn lane (TWLTL) on East Lake Sammamish Parkway NE past the site access driveway.

Study Scope

The scope of this analysis is consistent with the analysis of similar projects in the area previously approved by City of Redmond staff and was coordinated with City Staff. Based on the anticipated vehicular impacts of the proposed project, the following intersections were selected for analysis:

1. E Lake Sammamish Parkway NE/ NE 65th Street
2. E Lake Sammamish Parkway NE/ Redmond Way
3. NE 70th Street/ Redmond Way (SR 202)

In addition, the site access driveway was evaluated under future (2019) with-project conditions.

The scope of the analysis included a review of existing and future without-project conditions in the vicinity of the project site under weekday PM peak hour. This scope includes a review of the surrounding roadway network, existing and future without-project weekday PM peak hour traffic volumes, traffic operations, collision history, non-motorized facilities, and transit service. Future (2019) with-project conditions were estimated by adding site-generated traffic to future without-project volumes. The project's impacts on the surrounding transportation system were identified by comparing the future with-project conditions to the future without-project conditions.

[1] 35 open one-bedroom units, 76 one-bedroom units, and 28 two-bedroom units

Site Vicinity and Study Intersections

The Bond

FIGURE

1

transpogroup
WHAT TRANSPORTATION CAN BE.

May 17, 2016 - 3:23pm mattt Q:\Projects\15\15525.00 - East Lake Sammamish MF\Graphics\East Lake Sammamish (The Bond).dwg Layout: Site Vicinity

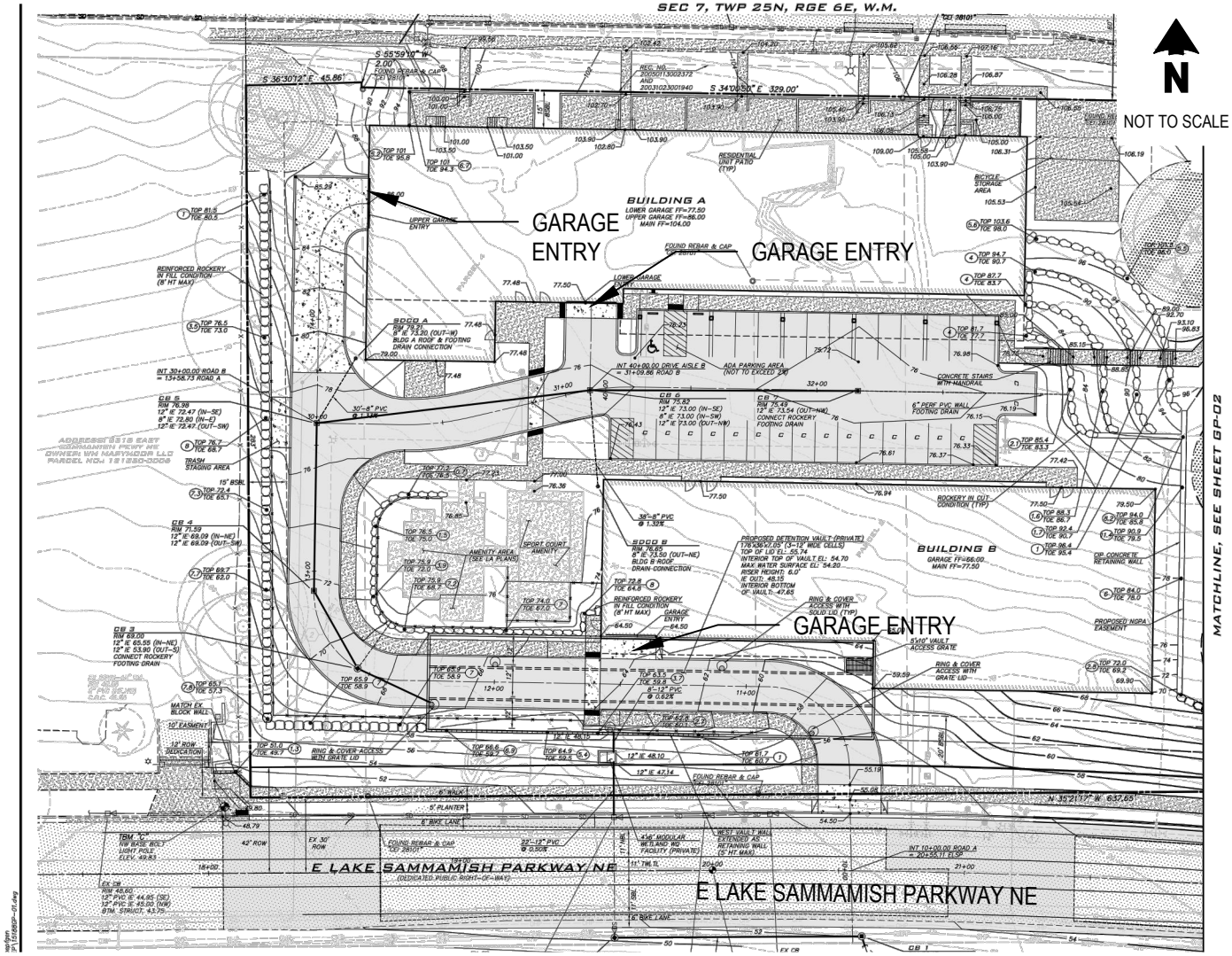

Preliminary Site Plan

The Bond

FIGURE

2

transpogroup
WHAT TRANSPORTATION CAN BE.

May 18, 2016 - 2:30pm mattt Q:\Projects\15\15525.00 - East Lake Sammamish MF\Graphics\East Lake Sammamish (The Bond).dwg Layout: Site Plan

Existing & Future Without-Project Conditions

This section describes both existing and future (2019) without-project conditions within the vicinity of the proposed project. Study area characteristics are summarized for the street system, existing and future forecasted without-project traffic volumes, traffic operations, traffic safety, transit service, and non-motorized facilities.

Street System

The following sections describe the existing street network within the vicinity of the proposed project and anticipated changes resulting from planned improvements.

Existing

Characteristics of the existing street system in the proposed project vicinity are shown in Table 1. The street system in the vicinity of the site provides pedestrian connectivity via sidewalks on both sides of study area roadways with the exception of the west side of E Lake Sammamish Parkway NE, which maintains a striped shoulder. It should be noted that just west of the street is the Sammamish River Trail runs north-south along East Lake Sammamish Parkway and provides a separated trail for non-motorized travel.

Table 1. Study Area Existing Street System Summary

Roadway	Arterial Classification	Posted Speed Limit	Number of Travel Lanes	Parking	Sidewalks	Bicycle Facilities
Redmond Way (SR 202)	Principal Arterial	45 mph	5/6 lanes	No	Yes	Yes
E Lake Sammamish Parkway NE	Minor Arterial	35 mph	2 lanes	No	Yes[1]	Yes
NE 70th Street	Local Street	25 mph	4 lanes	No	Yes[2]	No
NE 65th Street	Local Street	25 mph	2 lanes	Yes	Yes[3]	Yes

1. Sidewalk provided on the east side the street only
2. Sidewalks provided intermittently on the south side and not on the north side of the street
3. Sidewalk provided on the south side of the street only

Planned Improvements

A review of the City of Redmond *2016 – 2021 Transportation Improvement Plan (TIP)* did not identify any planned improvements that would alter existing channelization, capacity, transit, or non-motorized facilities in the project vicinity.

Transit Service

The nearest bus stops to the proposed development are located at the intersection of 185th Avenue NE/ Redmond Way which can be accessed by the non-motorized access from the project site. Additional bus service is provided within one-quarter mile of the project site at the 185th Avenue NE/ NE 65th Street intersection. Bus transit service in the study area is provided by King County Metro Transit and Sound Transit. The following transit routes operate within the project vicinity.

Routes 216 and 219 operate between the Bear Creek Park and Ride, Issaquah, and Downtown Seattle. Route 216 stops at the 185th Avenue NE/NE 65th Street intersection while route 219 stops at 185th Avenue NE/ Redmond Way intersection within the project vicinity. It should be noted that both intersections are within one quarter-mile of the proposed project site. Service is provided on a daily basis with headways of less than 10 minutes during the weekday PM peak hour. These routes do not operate outside of peak hour travel times.

Route 268 operates between Redmond and Downtown Seattle. Service is provided on weekdays during the AM and PM peak hours only with headways of approximately 20 to 30 minutes during peak travel times.

Route 269 operates between Issaquah and Overlake with stops in Redmond. Service is provided on weekdays during the AM and PM peak hours only with headways of approximately 30 to 60 minutes or less during peak travel times.

Route 554 operates between Redmond, Issaquah, and Downtown Seattle with stops at the Eastgate and Mercer Island Park and Rides. Service is only provided in the early morning and late evening with sporadic headways; service is not provided during either the AM or PM peak hour periods.

Non-Motorized Facilities

The following sections summarize existing non-motorized facilities within the study area. The proposed project site is located within close proximity to the Sammamish River Trail that is designated for non-motorized uses such as pedestrians and bicycles.

Pedestrian

The study area contains a sidewalk network with sidewalks provided along both sides of most study area roads. All study intersections in the project vicinity are controlled by traffic signals with full or partial pedestrian crosswalks provided. The Sammamish River Trail is located west of the project site and provides additional pedestrian connections throughout Redmond. Based on a review of *The City of Redmond Transportation Master Plan* (2013), no specific pedestrian related improvements were identified within the study area.

Bicycle

The Sammamish River Trail is the only dedicated multi-use bicycle facility located in the immediate vicinity of the project site, and provides bicycle connections throughout Redmond and to other regional facilities such as the Burke-Gilman Trail. Within the study area, there are separated bicycle lanes on both NE 65th Street and E Lake Sammamish Parkway NE. Bicycles otherwise share the travelled way with motor vehicles. Based on a review of *The City of Redmond Transportation Master Plan* (2013), no specific bicycle related improvements were identified within the study area.

Traffic Volumes

The following sections summarize existing traffic volumes and forecast future (2019) without-project traffic volumes within the study area.

Existing

Existing traffic volumes used for this analysis were collected in August 2015[2] and May 2016. To account for different count dates, 2015 volumes were balanced to the higher amount between study intersections 1 and 2. Additionally, intersection turning-movement counts collected in 2015 were grown by two percent for an additional year (2015-2016) to assure the representation of existing 2016 volumes. This growth rate is consistent with other projects completed in the vicinity of this project.

[2] August 2015 traffic counts provided in the Transportation Improvement Analysis for the Wood Springs Suites development (December 2015).

Figure 3 illustrates the existing weekday PM peak hour traffic volumes at the study intersections, rounded to the nearest 5 vehicles. Detailed traffic counts are provided in Appendix A.

Future (2019)

Future without-project weekday PM peak hour traffic volumes were estimated by growing existing traffic volumes by two percent per year to 2019 conditions, the same growth rate used to scale the 2015 counts to 2016 volumes.

Based on coordination with City of Redmond staff, two pipeline projects were identified within the study vicinity: The aforementioned Wood Springs Suites and the Marymoor Apartments. 2019 PM peak hour without-project volumes, inclusive of the background rate and pipeline projects, are summarized in Figure 3.

EXISTING (2016)

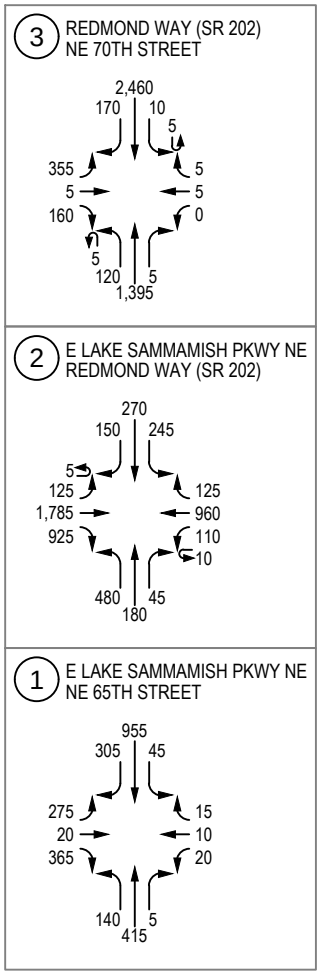

FUTURE (2019) WITHOUT PROJECT

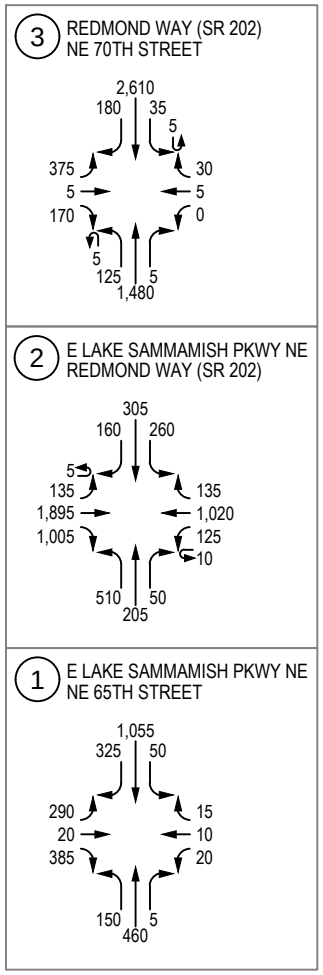

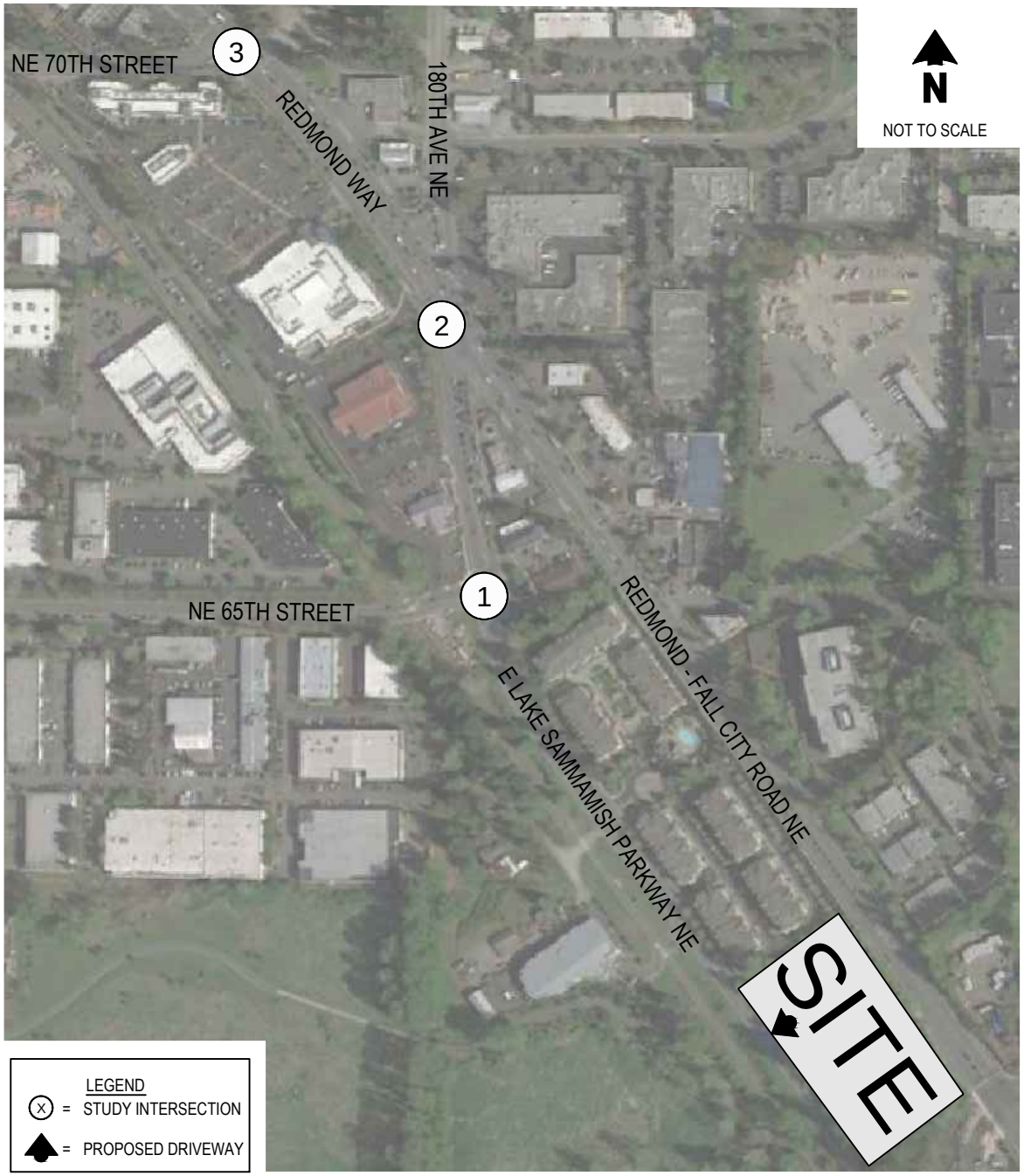

Existing & Future (2019) Without Project Weekday PM Peak Hour Traffic Volumes

FIGURE **3**

The Bond

transpogroup
WHAT TRANSPORTATION CAN BE.

May 17, 2016 - 3:23pm mattt Q:\Projects\15\15525.00 - East Lake Sammamish MF\Graphics\East Lake Sammamish (The Bond).dwg Layout: Existing & Future Without Project

Traffic Operations

The operational characteristics of an intersection are determined by calculating the intersection level of service (LOS). For signalized locations, LOS is measured in average delay per vehicle and is reported for the intersections as a whole. At side-street stop-controlled intersections, LOS is measured in average delay per vehicle during the peak hour of traffic and is reported for the worst operating movement of the intersection. Traffic operations for an intersection can be described alphabetically with a range of levels of service (LOS A through F), with LOS A indicating free-flowing traffic and LOS F indicating extreme congestion and long vehicle delays. Appendix B contains a detailed explanation of LOS criteria and definitions.

Weekday PM peak hour traffic operations for existing and future without-project conditions were evaluated at the intersection of East Lake Sammamish Parkway NE/ NE 65th Street based on the procedures identified in the *Highway Capacity Manual* (HCM, 2010). PM peak hour traffic operations at the other two study intersections along Redmond Way were evaluated using HCM 2000 due to the presence of U-turns. All calculations were completed using the Synchro 9 software program.

Existing signal timing settings[3] were used for existing conditions while splits and offsets were optimized under future without-project conditions. Existing and forecast (2019) without-project weekday PM peak hour intersection operations are summarized in Table 2. The City of Redmond maintains an operations standard of LOS D or better. Detailed LOS worksheets for each intersection analysis are included in Appendix C.

Table 2. Existing and Future Weekday PM Peak Hour Intersection LOS Summary

		Existing (2016)			2019 Without-Project		
Intersection	**Traffic Control**	**LOS[1]**	**Delay[2]**	**WM[3]**	**LOS**	**Delay**	**WM**
1. E Lake Sammamish Parkway NE/ NE 65th Street	Signalized	C[4]	32	-	D[4]	37	-
2. E Lake Sammamish Parkway NE/ Redmond Way	Signalized	F[5]	164	-	F[5]	173	-
3. Redmond Way/ NE 70th Street	Signalized	C[5]	28	-	C[5]	31	-

1. Level of Service (A – F) as defined by the *Highway Capacity Manual* (TRB, 2010)
2. Average delay per vehicle in seconds.
3. Worst movement (WM) reported for unsignalized intersections, NB = northbound
4. Evaluated using HCM 2010
5. Evaluated using HCM 2000

As shown in Table 2, all study intersections currently operate at LOS C or better during the PM peak hour with the exception of East Lake Sammamish Parkway NE/ Redmond Way, which operates at LOS F under existing conditions. In 2019 with the anticipated growth in traffic volumes, operations at the signalized study intersections will experience increases in overall vehicle delay and the intersection of E Lake Sammamish Parkway NE/ NE 65th Street is anticipated to degrade from LOS C to LOS D under without-project conditions. All intersections would meet the City of Redmond's LOS D Standard with the exception of E Lake Sammamish Parkway NE/ Redmond Way, which operates at LOS F under both pre-project conditions. These results are consistent with previous studies completed in the area.[4]

Traffic Safety

Recent collision records were reviewed within the study area to identify if any existing traffic safety issues exist at the study intersections. Collision data for the three most recent calendar years were provided by the Washington State Department of Transportation (WSDOT)

[3] Signal Timing settings provided in the Wood Spring Suites TIA Worksheets

[4] Wood Springs Suites TIA (December 2015) and Marymoor Apartments (December 2015)

(January 1, 2013 and December 31, 2015). In addition to the intersections, collision data along the roadways adjacent to the project site were also summarized. The collision history within the study area is summarized in Table 3.

Table 3. Three-Year Collision Summary – 2013 to 2015

Location	Number of Collisions			Total	Annual Average	Collisions per MEV[1]
	2013	2014	2015			
Intersection						
1. NE 65th Street/ E Lake Sammamish Parkway NE	2	1	3	6	2.0	0.21
2. E Lake Sammamish Parkway NE/ Redmond Way	18	19	18	55	18.3	0.99
3. NE 70th Street/ Redmond Way	3	6	8	17	5.7	0.34
Roadway Segments						
E Lake Sammamish Parkway NE (Redmond Way to 187th Avenue NE)	3	5	4	12	4.0	-

Source: WSDOT
1. Million Entering Vehicles

The collision rate is representative of the number of collisions per one million entering vehicles (MEV) at each intersection. Intersections with a rate greater than 1.00 collision per MEV are typically considered for further investigation to determine whether an adverse condition exists. As shown in the table, all study intersections are at or below 1.00 collisions per MEV although intersection number 2 is at 0.99 collision/MEV. It should be noted, however, that there were no fatalities and only 2 evident injury collision over the past three years of data. Additionally, the majority of collisions reported over the past three years (36) were either rear-end or side-swipe collisions. This particular intersection experiences congestion during the PM peak period, as evidenced by its LOS F operation in the previous section. Considering the collision types and congestion issues at the intersection, many of the collisions are likely congestion related and do not represent an adverse safety condition.

Similarly, considering roadway segments, E Lake Sammamish Parkway between Redmond Way and 187th Avenue NE, there was an average of less than 4 collisions per year. The number or rate of collisions do not suggest a systemic existing safety issue.

Project Impacts

The following sections summarize the proposed project's impacts on the surrounding street system. First, traffic volumes generated by the proposed project are estimated and then distributed and assigned to adjacent roadways within the study area. Next, project trips are added to future without-project traffic volumes and the potential impact to traffic operations, safety, transit, and non-motorized facilities are identified. Site-specific items are also discussed such as the traffic operations of the site's access driveway and estimated on-site parking demand.

Trip Generation

Trip generation for the proposed residential development is summarized in Table 4. Estimates for the project-generated vehicle trips were calculated using average peak hour trip rates for apartments (Land Use # 220) published by the Institute of Transportation Engineers (ITE) in *Trip Generation* (9th Edition, 2012). As described previously, the proposed project would construct 139 new single-family residential units.

Table 4. Estimated Weekday Vehicle Trip Generation[1]

Land Use	Size	Daily Trips[2]	AM Peak-Hour Trips			PM Peak-Hour Trips		
			In	Out	Total	In	Out	Total
Apartment (LU #220)	139 DU	966	14	58	72	61	33	94

Notes: DU = dwelling unit, sf = square feet, LU= land use
1. Trip equations used from ITE Trip Generation Manual, 9th Editions, 2012

As shown in Table 4, the proposed development is anticipated to generate approximately 966 new daily vehicle trips. During the average weekday AM and PM peak hours, the proposed project is estimated to generate 72 and 94 vehicle trips, respectively.

Trip Distribution & Assignment

The weekday PM peak hour vehicular trips associated with the project were distributed to the roadway network consistent with previous projects in the project vicinity.[5] Trips generated by the proposed project are assigned to the roadway network and are shown in Figure 4.

[5] Marymoor Apartments, 6081 E Lake Sammamish Parkway NE, Permit Number BLDG-2016-02491

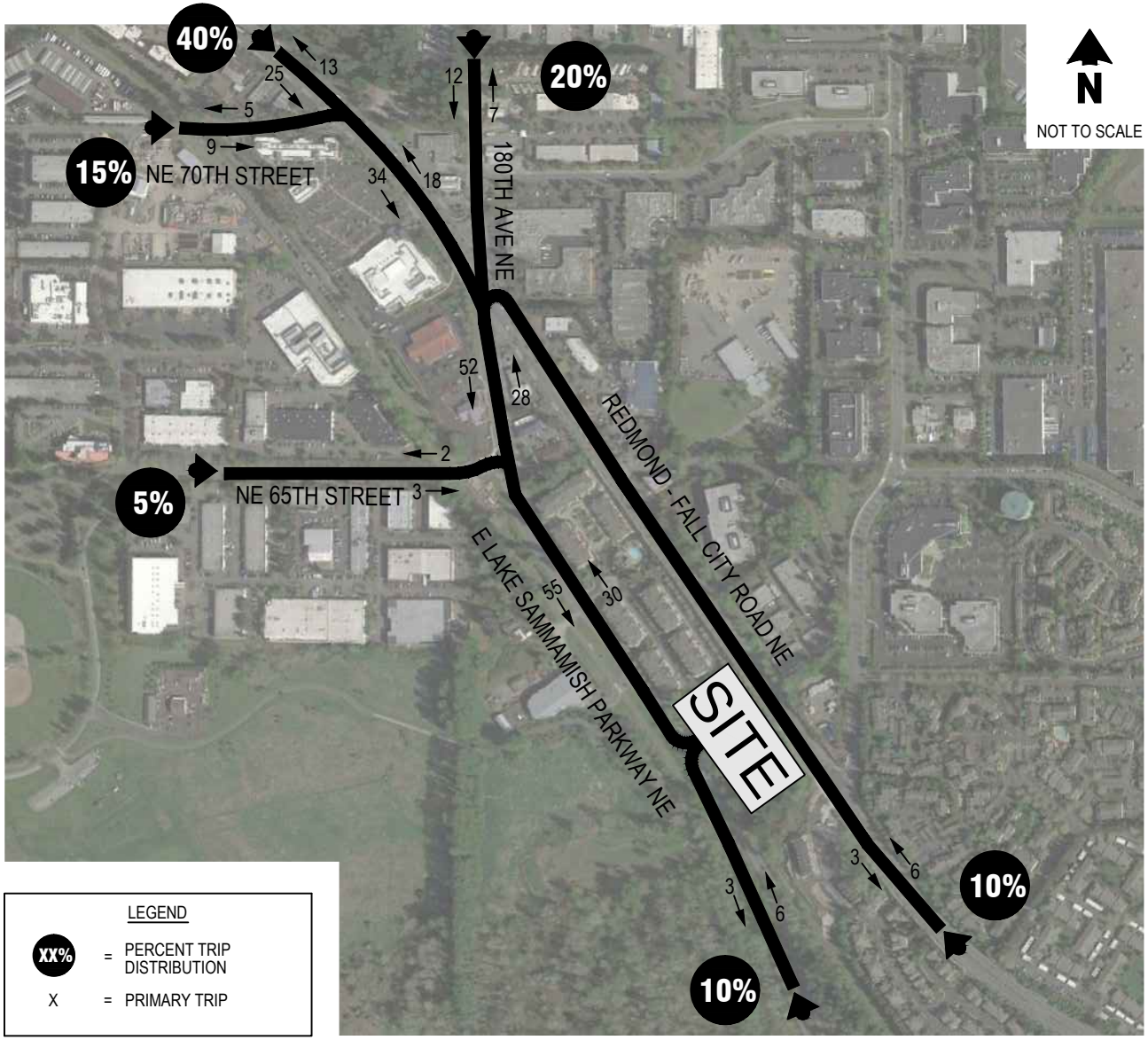

Weekday PM Peak Hour Project Trip Distribution and Assignment

FIGURE **4**

The Bond

transpogroup
WHAT TRANSPORTATION CAN BE.

May 17, 2016 - 3:23pm mattt Q:\Projects\15\15525.00 - East Lake Sammamish MF\Graphics\East Lake Sammamish (The Bond).dwg Layout: Inbound Trip Distribution

Traffic Volume Impact

Site-generated weekday PM peak hour traffic volumes were added to future without-project volumes at study intersections. The resulting future (2019) with-project peak hour traffic volumes are illustrated in Figure 5. Table 5 summarizes the anticipated increase in total entering traffic at the study intersections as well as the percent of future with-project traffic volumes attributable to the proposed residential project.

Table 5. Traffic Volume Impacts at Study Intersections

	Weekday PM Peak Hour Total Entering Vehicles			
Intersection	**2019 Without-Project**	**New Project Trips**	**2019 With-Project**	**Percent Project Share**
1. NE 65th Street/ E Lake Sammamish Parkway NE	2,785	85	2,870	3.0%
2. E Lake Sammamish Parkway NE/ Redmond Way	5,820	80	5,900	1.4%
3. NE 70th Street/ Redmond Way	5,030	52	5,082	1.0%

As shown in Table 5, the percent traffic volume impacts would be approximately 3 percent or less at each of the off-site intersections. The project would have the greatest impact at the NE 65th Street/ E Lake Sammamish Parkway NE intersection, which serves the lowest traffic volumes of the three study intersections.

Traffic Operations Impact

A future with-project level-of-service analysis was conducted for the weekday PM peak hour to analyze traffic impacts of the proposed project. The same methodologies were applied as described for existing and future without-project conditions. Cycle lengths were kept consistent from existing and without-project conditions, but splits and offsets were optimized under with-project conditions. Intersection parameters such as channelization and intersection control were consistent with those used in the evaluation of future without-project conditions. A comparison of future (2019) without-project and with-project weekday PM peak hour traffic operations is summarized in Table 6. Detailed LOS worksheets are provided in Appendix C.

Table 6. Existing and Future Weekday PM Peak Hour Intersection LOS Summary

		2019 Without-Project			2019 With-Project		
Intersection	**Traffic Control**	**LOS[1]**	**Delay[2]**	**WM[3]**	**LOS**	**Delay**	**WM**
1. E Lake Sammamish Parkway NE/ NE 65th Street	Signalized	D[4]	37	-	D[4]	36	-
2. E Lake Sammamish Parkway NE/ Redmond Way	Signalized	F[5]	173	-	F[5]	179	-
3. Redmond Way/ NE 70th Street	Signalized	C[5]	31	-	C[5]	32	-

1. Level of Service (A – F) as defined by the *Highway Capacity Manual* (TRB, 2010)
2. Average delay per vehicle in seconds.
3. Worst movement (WM) reported for unsignalized intersections, NB = northbound
4. Evaluated using HCM 2010
5. Evaluated using HCM 2000

During the weekday PM peak hour, the addition of project traffic results in a small increase in average intersection delay but with all locations operating at the same LOS compared to without-project conditions during the PM peak hour. The decrease in delay at the E Lake Sammamish Parkway NE/ NE 65th Street intersection can be attributed to the addition of traffic to low-delay movements and further optimization of splits and offsets. All off-site study intersections would meet the City of Redmond's LOS D standard with the exception of E Lake Sammamish Parkway NE/ Redmond Way.

FUTURE (2019) WITH PROJECT

3 REDMOND WAY (SR 202) / NE 70TH STREET

2,635
180 | 35
5
375 | 30
5 | 5
179 | 0
5
130 | 5
1,493

2 E LAKE SAMMAMISH PKWY NE / REDMOND WAY (SR 202)

317
160 | 260
5
135 | 135
1,895 | 1,020
1,039 | 131
10
528 | 53
212

1 E LAKE SAMMAMISH PKWY NE / NE 65TH STREET

1,107
325 | 50
290 | 15
20 | 10
388 | 20
152 | 5
488

SITE ACCESS DRIVEWAY

A E LAKE SAMMAMISH PKWY NE / SITE ACCESS

1,425
55
30
3
610 | 6

Future (2019) With Project Weekday PM Peak Hour Traffic Volumes

FIGURE **5**

The Bond

transpogroup
WHAT TRANSPORTATION CAN BE.

May 17, 2016 - 3:23pm mattt Q:\Projects\15\15525.00 - East Lake Sammamish MF\Graphics\East Lake Sammamish (The Bond).dwg Layout: Future With-Project Conditions

Site Access Evaluation

The following sections describe the results of the traffic operations and sight-distance analyses conducted for the proposed site access driveway.

Driveway Operations

Primary vehicle access to the site is proposed via E Lake Sammamish Parkway NE along the southwest side of the building. As previously noted, the project would construct frontage improvements that would extend the existing two-way left-turn lane past the site access driveway. The two-way left-turn lane will be extended east of the driveway by approximately 40 feet before tapering back to match the existing roadway width.

Traffic volumes forecast at the primary site access driveway are shown in Figure 5. Weekday PM peak hour traffic operations at this driveway with the addition of project generated traffic were evaluated under HCM 2010 and showed operations at LOS C with approximately 23 seconds of delay. Detailed LOS worksheets are provided in Appendix C.

Sight Distance Evaluation

Sight distance triangles were reviewed for the single access point for the project. Required sight triangles were defined based on RZC 21.52.040 and RZC Appendix 2. Sight distance triangles are defined based on a 35 mph posted speed, plus the +10 mph adjustment factor identified in the guidelines.

Appendix D highlights the sight distance triangles for the access driveway. As shown on the attachment, driveway and intersection sightlines at the driveway are met north and south of the driveway based on the City of Redmond requirements.

Parking

The following sections summarize the proposed parking supply, City of Redmond parking code requirements, and estimated peak parking demand. This information has also been summarized in a parking deviation request (Appendix E).

Parking Supply

The proposed project provides a total of 171 on-site parking spaces via both surface parking and an onsite parking garage at a rate of 1.23 stalls per dwelling unit. Of these parking stalls, 34 would be tandem parking stalls (17 tandem spaces serving up to 34 vehicles). Note that street frontage improvements at the proposed site would not include the addition of on-street parking.

Parking Code Requirements

The proposed project is required to provide parking that falls between a minimum and maximum number of vehicle parking stalls to meet the City of Redmond Zoning Code. The proposed project is located within the R-30 Multifamily Residential Zone and requirements for parking are outlined in RZC 21.08.140. Table 21.08.140C in the Redmond Zoning Code identifies specific parking supplies per residential unit. Specifically, the parking ratios are as follows: 1.2 for studio units, 1.5 for 1-bedroom units, 1.8 for 2-bedroom units, and 2.0 for 3-bedroom units. Based on this standard and the proposed used mix of 35 open one-bedroom units, 76 one-bedroom units, and 28 two-bedroom units, a supply of 207 parking spaces is required of the proposed project. As noted previously, the proposed project includes parking for up to 171 vehicles through on-site stalls.

Peak Parking Demand

To estimate the peak parking demand of the proposed project, an evaluation of King County Metro's *Right Size Parking* calculator was performed to better estimate parking demand in the project vicinity.

Based on the proposed unit mix and as shown in Exhibit 1, the *Right Size Parking* calculator estimates the peak parking demand at a rate of 1.14 vehicles per apartment based on the proposed unit mix of 35 open one-bedroom units, 76 one-bedroom units, and 28 two-bedroom units. It should be noted that 19 of the apartment units would be considered affordable housing units (at or below 80 percent area median income). Additionally, residents would be required to pay a $95 monthly fee for on-site parking stalls. This monthly fee data is included in the *Right Size Parking Calculator* along with the unit mix and affordable housing units.

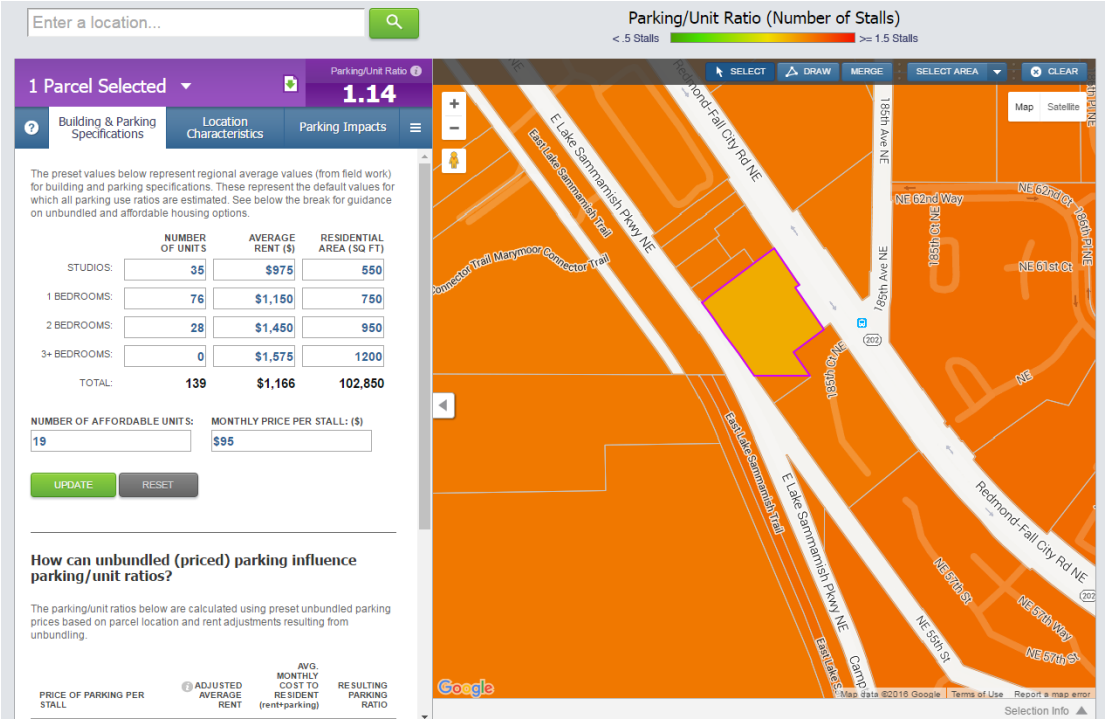

Exhibit 1 - King County Right Size Parking Calculator for "The Bond"

This results in an estimated peak parking demand ratio of 1.14 (159 vehicles). Though the parking supply does not meet the City of Redmond's zoning standard, the parking supply ratio of 1.23 (171 parking stalls) for the proposed project would accommodate the estimated peak parking demand as noted by the *Right Size Parking* calculator. Tandem spaces would be managed with a Transportation Management Program consistent with City of Redmond requirements.

Mitigation

Mitigation measures have been identified to reduce potential transportation-related project impacts. Specifically, the project does not cause any off-site intersections to fall below the City's adopted LOS standards. Based on this, no specific off-site measures are necessary to address project-related impacts.

Transportation Impact Fees

General impacts to the City's transportation system would be mitigated through the payment of City of Redmond Transportation Impact Fees. Per the City of Redmond Impact Fee[6] multifamily dwelling unit fee (for areas outside of Downtown and Overlake) is $3,992.06 per unit, resulting in an impact fee of $554,896.34 for the 139 unit project. This fee is a preliminary calculation and the final impact fee would be calculated by the City of Redmond at the time of building permit issuance.

[6] City of Redmond Impact Fees Schedule, effective 1/1/2016

Findings and Recommendations

This transportation impact study summarizes the project traffic impacts of the proposed project. General findings and recommendations include:

- The proposed project would develop up to 139 apartment units with a mix of 109 one-bedroom units and 30 two-bedroom units.
- The development is anticipated generate 966 new vehicular weekday daily trips, with 72 occurring during the weekday AM peak hour and 94 occurring during the weekday PM peak hour.
- Project traffic would represent approximately three percent or less of the 2019 weekday PM peak hour traffic volumes at all off-site study intersections.
- All study intersections are anticipated to operate at LOS D or better during the weekday PM peak hour with the project with the exception of East Lake Sammamish Parkway NE/ Redmond Way, which would operate at LOS F with or without project the addition of generated traffic.
- Vehicle access to the site would be provided along East Lake Sammamish Parkway NE. Planned improvements to the frontage include the addition of a two-way left-turn lane to assist inbound vehicles from the north turning into the site. During the weekday PM peak hour, the site access driveway on East Lake Sammamish Parkway NE would operate at LOS C. A pedestrian connection to Redmond-Fall City Road will also be provided.
- The proposed project would provide parking for up to 171 vehicles. The estimated peak parking demand as determined by King County's *Right Size Parking* would be accommodated by this proposed parking supply.

Appendix A:Traffic Counts

TRAFFIC DATA GATHERING

TURNING MOVEMENTS DIAGRAM

4:00 PM - 6:00 PM PEAK HOUR: 4:45 PM TO 5:45 PM

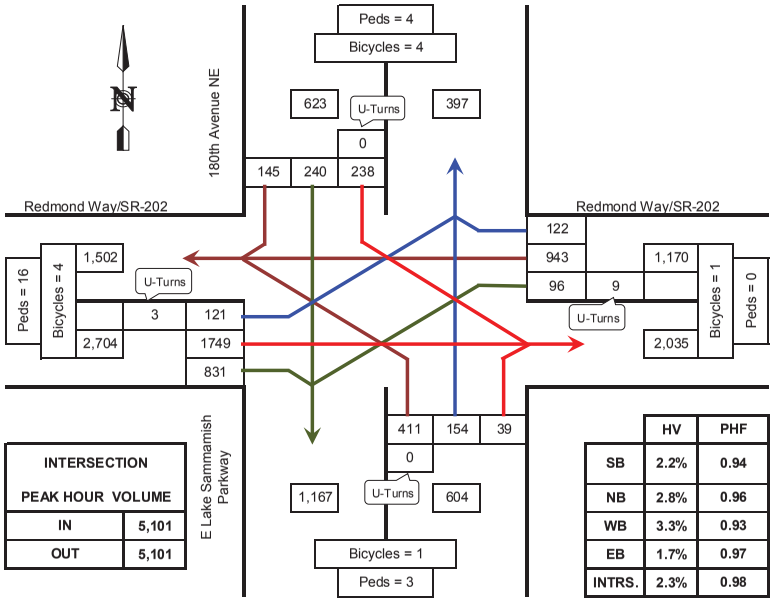

INTERSECTION PEAK HOUR VOLUME	
IN	5,101
OUT	5,101

	HV	PHF
SB	2.2%	0.94
NB	2.8%	0.96
WB	3.3%	0.93
EB	1.7%	0.97
INTRS.	2.3%	0.98

PHF = Peak Hour Factor
HV = Heavy Vehicles

Redmond Way/SR-202 @ 180th Avenue NE

Redmond, WA

COUNTED BY: CN/RM
DATE OF COUNT: Tue. 8/4/15
REDUCED BY: CN
TIME OF COUNT: 4:00 PM - 6:00 PM
REDUCTION DATE: Tue. 8/4/15
WEATHER: Sunny

TRAFFIC DATA GATHERING

INTERSECTION TURNING MOVEMENTS REDUCTION SHEET

LOCATION: Redmond Way/SR-202 @ 180th Avenue NE
Redmond, WA
DATE OF COUNT: Tue. 8/4/15
TIME OF COUNT: 4:00 PM - 6:00 PM
COUNTED BY: CN/RM
WEATHER: Sunny

TIME INTERVAL ENDING AT	FROM NORTH ON 180th Avenue NE							FROM SOUTH ON E Lake Sammamish Parkway							FROM EAST ON Redmond Way/SR-202							FROM WEST ON Redmond Way/SR-202							INTERVAL TOTALS
	Peds	Bikes	HV	UTurn	Left	Thru	Right	Peds	Bikes	HV	UTurn	Left	Thru	Right	Peds	Bikes	HV	UTurn	Left	Thru	Right	Peds	Bikes	HV	UTurn	Left	Thru	Right	
02:15 PM	0	0	0	0	0	0	0	0	0	0	0	0	0	0	0	0	0	0	0	0	0	0	0	0	0	0	0	0	0
02:30 PM	0	0	0	0	0	0	0	0	0	0	0	0	0	0	0	0	0	0	0	0	0	0	0	0	0	0	0	0	0
02:45 PM	0	0	0	0	0	0	0	0	0	0	0	0	0	0	0	0	0	0	0	0	0	0	0	0	0	0	0	0	0
03:00 PM	0	0	0	0	0	0	0	0	0	0	0	0	0	0	0	0	0	0	0	0	0	0	0	0	0	0	0	0	0
03:15 PM	0	0	0	0	0	0	0	0	0	0	0	0	0	0	0	0	0	0	0	0	0	0	0	0	0	0	0	0	0
03:30 PM	0	0	0	0	0	0	0	0	0	0	0	0	0	0	0	0	0	0	0	0	0	0	0	0	0	0	0	0	0
03:45 PM	0	0	0	0	0	0	0	0	0	0	0	0	0	0	0	0	0	0	0	0	0	0	0	0	0	0	0	0	0
04:00 PM	0	0	0	0	0	0	0	0	0	0	0	0	0	0	0	0	0	0	0	0	0	0	0	0	0	0	0	0	0
04:15 PM	1	1	1	0	39	44	38	1	0	2	0	87	33	8	0	0	7	2	17	230	22	1	0	12	0	18	407	158	1103
04:30 PM	0	0	2	0	40	47	35	1	0	3	0	75	31	9	0	1	11	6	15	231	27	0	0	14	1	15	446	178	1156
04:45 PM	2	2	3	0	56	51	40	4	0	3	0	122	41	11	0	1	9	1	24	253	27	3	0	11	0	23	413	160	1222
05:00 PM	1	4	5	0	56	56	38	0	0	1	0	94	41	11	0	1	9	3	20	219	28	3	1	18	3	33	424	222	1248
05:15 PM	3	0	5	0	51	57	39	2	0	4	0	108	36	8	0	0	11	2	29	253	31	2	0	8	0	32	444	171	1261
05:30 PM	0	0	2	0	70	59	32	0	0	7	0	111	37	10	0	0	11	2	27	244	32	8	0	7	0	28	425	223	1300
05:45 PM	0	0	2	0	61	68	36	1	1	5	0	98	40	10	0	0	8	2	20	227	31	3	3	12	0	28	456	215	1292
06:00 PM	0	1	4	0	68	51	36	2	0	4	0	88	37	8	0	0	11	4	20	209	25	4	3	8	0	29	410	180	1165
PEAK HOUR TOTALS	4	4	14	0	238	240	145	3	1	17	0	411	154	39	0	1	39	9	96	943	122	16	4	45	3	121	1749	831	INTERSECTION
ALL MOVEMENTS	623							604							1170							2704							5101
% HV	2.2%							2.8%							3.3%							1.7%							2.3%
PEAK HOUR FACTOR	0.94							0.96							0.93							0.97							0.98

PHF = Peak Hour Factor

4:00 PM - 6:00 PM PEAK HOUR: 4:45 PM TO 5:45 PM

REDUCED BY: CN

DATE OF REDUCTION: 8/4/2015

TRAFFIC DATA GATHERING

TURNING MOVEMENTS DIAGRAM

4:00 PM - 6:00 PM PEAK HOUR: 4:45 PM TO 5:45 PM

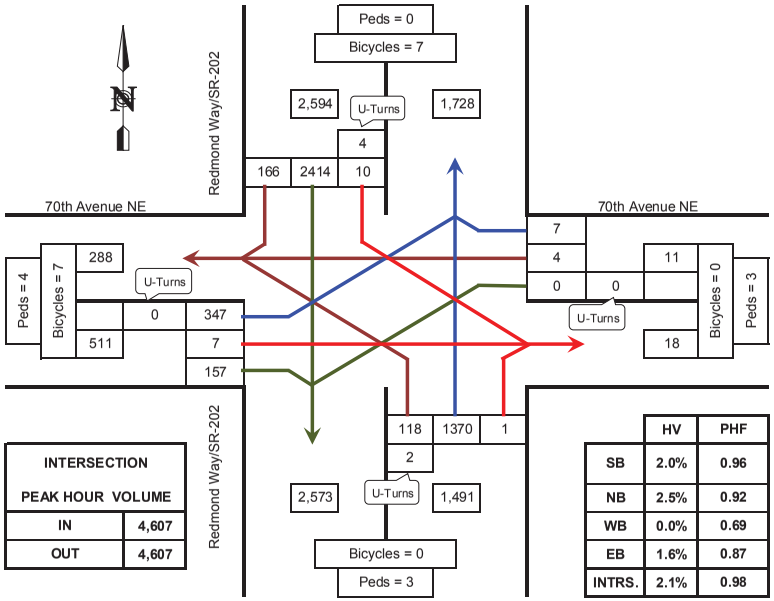

INTERSECTION PEAK HOUR VOLUME	
IN	4,607
OUT	4,607

	HV	PHF
SB	2.0%	0.96
NB	2.5%	0.92
WB	0.0%	0.69
EB	1.6%	0.87
INTRS.	2.1%	0.98

PHF = Peak Hour Factor
HV = Heavy Vehicles

Redmond Way/SR-202 @ 70th Avenue NE

Redmond, WA

COUNTED BY: VT

DATE OF COUNT: Tue. 8/4/15

REDUCED BY: CN

TIME OF COUNT: 4:00 PM - 6:00 PM

REDUCTION DATE: Fri. 8/7/15

WEATHER: Sunny

TRAFFIC DATA GATHERING

INTERSECTION TURNING MOVEMENTS REDUCTION SHEET

LOCATION: Redmond Way/SR-202 @ 70th Avenue NE
Redmond, WA

DATE OF COUNT: Tue. 8/4/15
TIME OF COUNT: 4:00 PM - 6:00 PM

COUNTED BY: VT
WEATHER: Sunny

TIME INTERVAL ENDING AT	FROM NORTH ON Redmond Way/SR-202							FROM SOUTH ON Redmond Way/SR-202							FROM EAST ON 70th Avenue NE							FROM WEST ON 70th Avenue NE							INTERVAL TOTALS
	Peds	Bikes	HV	UTurn	Left	Thru	Right	Peds	Bikes	HV	UTurn	Left	Thru	Right	Peds	Bikes	HV	UTurn	Left	Thru	Right	Peds	Bikes	HV	UTurn	Left	Thru	Right	
02:15 PM	0	0	0	0	0	0	0	0	0	0	0	0	0	0	0	0	0	0	0	0	0	0	0	0	0	0	0	0	0
02:30 PM	0	0	0	0	0	0	0	0	0	0	0	0	0	0	0	0	0	0	0	0	0	0	0	0	0	0	0	0	0
02:45 PM	0	0	0	0	0	0	0	0	0	0	0	0	0	0	0	0	0	0	0	0	0	0	0	0	0	0	0	0	0
03:00 PM	0	0	0	0	0	0	0	0	0	0	0	0	0	0	0	0	0	0	0	0	0	0	0	0	0	0	0	0	0
03:15 PM	0	0	0	0	0	0	0	0	0	0	0	0	0	0	0	0	0	0	0	0	0	0	0	0	0	0	0	0	0
03:30 PM	0	0	0	0	0	0	0	0	0	0	0	0	0	0	0	0	0	0	0	0	0	0	0	0	0	0	0	0	0
03:45 PM	0	0	0	0	0	0	0	0	0	0	0	0	0	0	0	0	0	0	0	0	0	0	0	0	0	0	0	0	0
04:00 PM	0	0	0	0	0	0	0	0	0	0	0	0	0	0	0	0	0	0	0	0	0	0	0	0	0	0	0	0	0
04:15 PM	0	0	8	0	3	553	36	3	0	11	0	24	368	0	3	3	0	0	0	2	5	2	2	2	0	82	0	32	1105
04:30 PM	0	0	11	1	1	632	43	0	0	9	1	23	374	0	1	0	1	0	0	0	1	0	1	2	0	72	1	41	1190
04:45 PM	0	1	9	1	2	546	30	4	0	13	1	20	378	1	1	0	0	0	0	1	4	2	0	0	0	87	1	24	1096
05:00 PM	0	2	21	2	3	615	41	1	0	12	1	28	354	0	1	0	0	0	0	0	0	3	0	1	0	81	1	39	1165
05:15 PM	0	2	10	0	3	582	40	0	0	8	1	29	328	0	0	0	0	0	0	0	3	0	3	3	0	114	3	30	1133
05:30 PM	0	0	8	0	2	593	35	1	0	10	0	33	373	1	0	0	0	0	0	1	3	0	1	2	0	83	3	50	1177
05:45 PM	0	3	14	2	2	624	50	1	0	8	0	28	315	0	2	0	0	0	0	3	1	1	3	2	0	69	0	38	1132
06:00 PM	2	0	8	1	0	591	36	1	0	11	1	28	312	0	1	0	0	0	0	0	0	0	0	0	0	63	1	43	1076
PEAK HOUR TOTALS	0	7	53	4	10	2414	166	3	0	38	2	118	1370	1	3	0	0	0	0	4	7	4	7	8	0	347	7	157	INTERSECTION
ALL MOVEMENTS	2594							1491							11							511							4607
% HV	2.0%							2.5%							0.0%							1.6%							2.1%
PEAK HOUR FACTOR	0.96							0.92							0.69							0.87							0.98

PHF = Peak Hour Factor

4:00 PM - 6:00 PM PEAK HOUR: 4:45 PM TO 5:45 PM

REDUCED BY: CN

DATE OF REDUCTION: 8/7/2015

Transpo Group
11730 118th Ave NE - Suite 600
Kirkland, WA, 98034
425-821-3665

Turn Count Summary

Location: E Lake Sammamish Pkwy at NE 65th St, Redmond Wa
GPS Coordinates: Lat=47.706020, Lon=-122.183261
Date: 2016-05-12
Day of week: Thursday
Weather: Sunny
Analyst: Tuan Nguyen

Total vehicle traffic

Interval starts	SouthBound			Westbound			Northbound			Eastbound			Total
	Left	Thru	Right	Left	Thru	Right	Left	Thru	Right	Left	Thru	Right	
16:00	4	183	40	2	1	3	27	78	1	71	1	49	460
16:15	5	230	39	3	0	2	23	75	1	30	4	38	450
16:30	6	226	58	5	2	3	43	85	0	46	3	68	545
16:45	12	240	57	7	1	8	28	94	0	26	2	74	549
17:00	10	234	72	4	1	1	33	89	3	80	6	107	640
17:15	10	259	67	4	2	4	35	107	0	37	4	82	611
17:30	12	243	70	4	2	6	27	101	2	70	3	88	628
17:45	14	219	95	7	4	6	45	119	2	89	8	86	694

Car traffic

Interval starts	SouthBound			Westbound			Northbound			Eastbound			Total
	Left	Thru	Right	Left	Thru	Right	Left	Thru	Right	Left	Thru	Right	
16:00	4	180	40	2	1	3	27	70	1	70	1	48	447
16:15	5	227	38	3	0	2	23	68	1	30	4	37	438
16:30	6	222	57	5	2	3	43	81	0	43	3	68	533
16:45	12	230	57	7	1	8	26	92	0	25	2	74	534
17:00	10	232	71	4	1	1	32	85	3	79	6	105	629
17:15	10	255	65	4	2	4	34	104	0	37	4	81	600
17:30	11	241	70	4	2	5	27	100	2	68	3	88	621
17:45	14	219	95	7	4	6	45	116	2	89	8	86	691

Truck traffic

Interval starts	SouthBound			Westbound			Northbound			Eastbound			Total
	Left	Thru	Right	Left	Thru	Right	Left	Thru	Right	Left	Thru	Right	
16:00	0	3	0	0	0	0	0	8	0	1	0	1	13
16:15	0	3	1	0	0	0	0	7	0	0	0	1	12
16:30	0	4	1	0	0	0	0	4	0	3	0	0	12
16:45	0	10	0	0	0	0	2	2	0	1	0	0	15
17:00	0	2	1	0	0	0	1	4	0	1	0	2	11
17:15	0	4	2	0	0	0	1	3	0	0	0	1	11
17:30	1	2	0	0	0	1	0	1	0	2	0	0	7
17:45	0	0	0	0	0	0	0	3	0	0	0	0	3

Pedestrian volumes

Interval starts	NE			NW			SW			SE			Total
	Left	Right	Total	Left	Right	Total	Left	Right	Total	Left	Right	Total	
16:00	2	0	2	1	0	1	0	1	1	1	0	1	5
16:15	2	2	4	1	1	2	0	0	0	1	0	1	7
16:30	1	0	1	0	0	0	0	2	2	0	2	2	5
16:45	0	0	0	0	1	1	0	0	0	0	1	1	2
17:00	0	0	0	0	0	0	0	1	1	0	0	0	1
17:15	1	0	1	0	1	1	0	1	1	2	0	2	5
17:30	0	0	0	0	0	0	0	0	0	3	0	3	3
17:45	1	1	2	0	0	0	0	1	1	6	1	7	10

Intersection Peak Hour

17:00 - 18:00

	SouthBound			Westbound			Northbound			Eastbound			Total
	Left	Thru	Right	Left	Thru	Right	Left	Thru	Right	Left	Thru	Right	
Vehicle Total	46	955	304	19	9	17	140	416	7	276	21	363	2573
Factor	0.82	0.92	0.80	0.68	0.56	0.71	0.78	0.87	0.58	0.78	0.66	0.85	0.93
Approach Factor	0.97			0.66			0.85			0.85			

Peak Hour Vehicle Summary

Vehicle	SouthBound			Westbound			Northbound			Eastbound			Total
	Left	Thru	Right	Left	Thru	Right	Left	Thru	Right	Left	Thru	Right	
Car	45	947	301	19	9	16	138	405	7	273	21	360	2541
Truck	1	8	3	0	0	1	2	11	0	3	0	3	32

Peak Hour Pedestrians

	NE			NW			SW			SE			Total
	Left	Right	Total	Left	Right	Total	Left	Right	Total	Left	Right	Total	
Pedestrians	2	1	3	0	1	1	0	3	3	11	1	12	19

Intersection Peak Hour

Location: E Lake Sammamish Pkwy at NE 65th St, Redmond Wa
GPS Coordinates: Lat=47.706020, Lon=-122.183261
Date: 2016-05-12
Day of week: Thursday
Weather: Sunny
Analyst: Tuan Nguyen

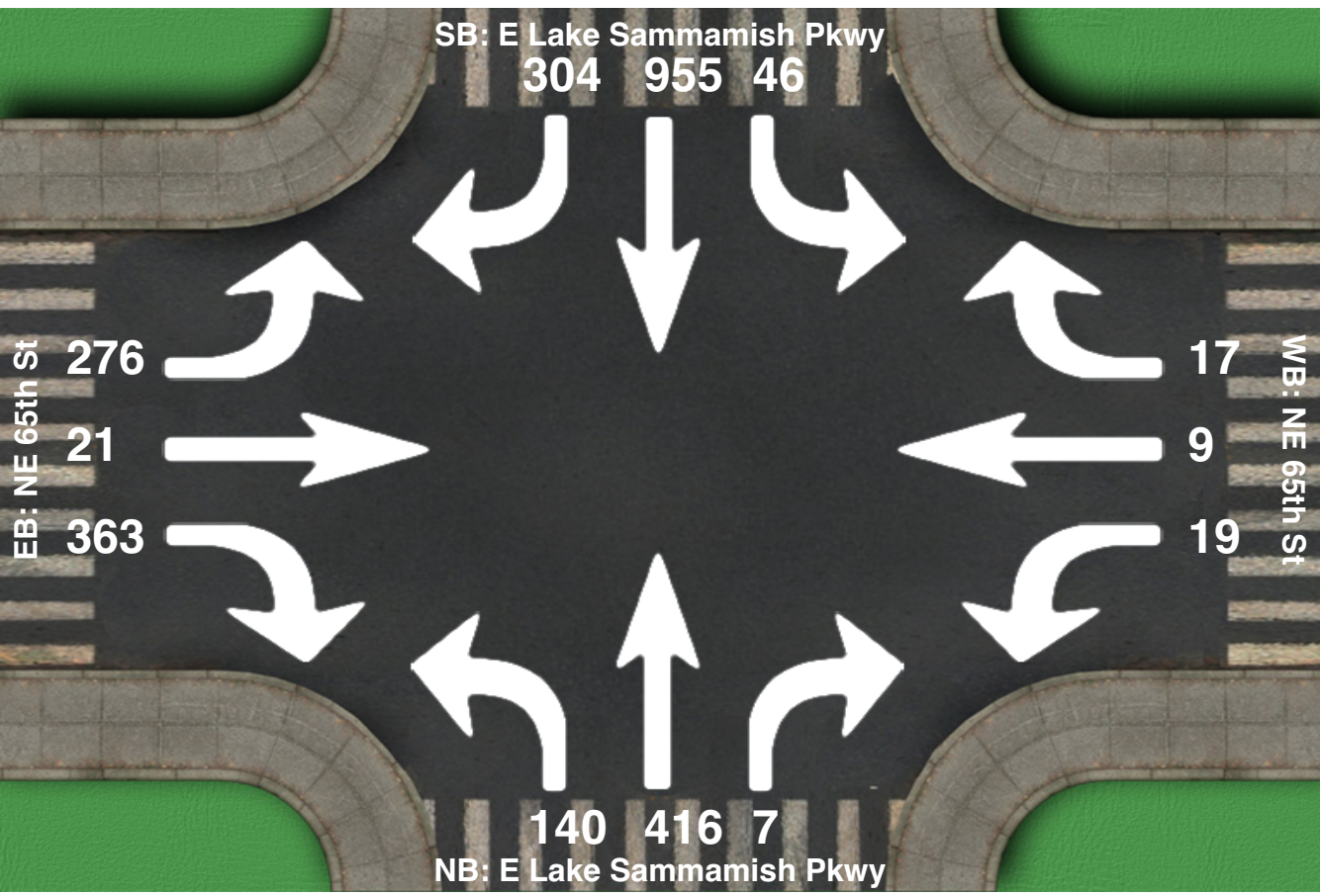

Intersection Peak Hour

17:00 - 18:00

	SouthBound			Westbound			Northbound			Eastbound			Total
	Left	Thru	Right	Left	Thru	Right	Left	Thru	Right	Left	Thru	Right	
Vehicle Total	46	955	304	19	9	17	140	416	7	276	21	363	2573
Factor	0.82	0.92	0.80	0.68	0.56	0.71	0.78	0.87	0.58	0.78	0.66	0.85	0.93
Approach Factor	0.97			0.66			0.85			0.85			

Appendix B:LOS Definitions

Highway Capacity Manual, 2000

Signalized intersection level of service (LOS) is defined in terms of the average total vehicle delay of all movements through an intersection. Vehicle delay is a method of quantifying several intangible factors, including driver discomfort, frustration, and lost travel time. Specifically, LOS criteria are stated in terms of average delay per vehicle during a specified time period (for example, the PM peak hour). Vehicle delay is a complex measure based on many variables, including signal phasing (i.e., progression of movements through the intersection), signal cycle length, and traffic volumes with respect to intersection capacity. Table 1 shows LOS criteria for signalized intersections, as described in the *Highway Capacity Manual* (Transportation Research Board, Special Report 209, 2000).

Table 1. Level of Service Criteria for Signalized Intersections

Level of Service	Average Control Delay (sec/veh)	General Description (Signalized Intersections)
A	≤10	Free Flow
B	>10 - 20	Stable Flow (slight delays)
C	>20 - 35	Stable flow (acceptable delays)
D	>35 - 55	Approaching unstable flow (tolerable delay, occasionally wait through more than one signal cycle before proceeding)
E	>55 - 80	Unstable flow (intolerable delay)
F	>80	Forced flow (jammed)

Source: *Highway Capacity Manual*, Transportation Research Board, Special Report 209, 2000.

Unsignalized intersection LOS criteria can be further reduced into two intersection types: all-way stop-controlled and two-way stop-controlled. All-way, stop-controlled intersection LOS is expressed in terms of the average vehicle delay of all of the movements, much like that of a signalized intersection. Two-way, stop-controlled intersection LOS is defined in terms of the average vehicle delay of an individual movement(s). This is because the performance of a two-way, stop-controlled intersection is more closely reflected in terms of its individual movements, rather than its performance overall. For this reason, LOS for a two-way, stop-controlled intersection is defined in terms of its individual movements. With this in mind, total average vehicle delay (i.e., average delay of all movements) for a two-way, stop-controlled intersection should be viewed with discretion. Table 2 shows LOS criteria for unsignalized intersections (both all-way and two-way, stop-controlled).

Table 2. Level of Service Criteria for Unsignalized Intersections

Level of Service	Average Control Delay (sec/veh)
A	0 - 10
B	>10 - 15
C	>15 - 25
D	>25 - 35
E	>35 - 50
F	>50

Source: *Highway Capacity Manual*, Transportation Research Board, Special Report 209, 2000.

Highway Capacity Manual 2010

Signalized intersection level of service (LOS) is defined in terms of a weighted average control delay for the entire intersection. Control delay quantifies the increase in travel time that a vehicle experiences due to the traffic signal control as well as provides a surrogate measure for driver discomfort and fuel consumption. Signalized intersection LOS is stated in terms of average control delay per vehicle (in seconds) during a specified time period (e.g., weekday PM peak hour). Control delay is a complex measure based on many variables, including signal phasing and coordination (i.e., progression of movements through the intersection and along the corridor), signal cycle length, and traffic volumes with respect to intersection capacity and resulting queues. Table 1 summarizes the LOS criteria for signalized intersections, as described in the *Highway Capacity Manual 2010* (Transportation Research Board, 2010).

Table 1. Level of Service Criteria for Signalized Intersections

Level of Service	Average Control Delay (seconds/vehicle)	General Description
A	≤10	Free Flow
B	>10 – 20	Stable Flow (slight delays)
C	>20 – 35	Stable flow (acceptable delays)
D	>35 – 55	Approaching unstable flow (tolerable delay, occasionally wait through more than one signal cycle before proceeding)
E	>55 – 80	Unstable flow (intolerable delay)
F[1]	>80	Forced flow (congested and queues fail to clear)

Source: *Highway Capacity Manual 2010*, Transportation Research Board, 2010.

1. If the volume-to-capacity (v/c) ratio for a lane group exceeds 1.0 LOS F is assigned to the individual lane group. LOS for overall approach or intersection is determined solely by the control delay.

Unsignalized intersection LOS criteria can be further reduced into two intersection types: all-way stop and two-way stop control. All-way stop control intersection LOS is expressed in terms of the weighted average control delay of the overall intersection or by approach. Two-way stop-controlled intersection LOS is defined in terms of the average control delay for each minor-street movement (or shared movement) as well as major-street left-turns. This approach is because major-street through vehicles are assumed to experience zero delay, a weighted average of all movements results in very low overall average delay, and this calculated low delay could mask deficiencies of minor movements. Table 2 shows LOS criteria for unsignalized intersections.

Table 2. Level of Service Criteria for Unsignalized Intersections

Level of Service	Average Control Delay (seconds/vehicle)
A	0 – 10
B	>10 – 15
C	>15 – 25
D	>25 – 35
E	>35 – 50
F[1]	>50

Source: *Highway Capacity Manual 2010*, Transportation Research Board, 2010.

1. If the volume-to-capacity (v/c) ratio exceeds 1.0, LOS F is assigned an individual lane group for all unsignalized intersections, or minor street approach at two-way stop-controlled intersections. Overall intersection LOS is determined solely by control delay.

Appendix C:LOS Worksheets

Movement	EBL	EBT	EBR	WBL	WBT	WBR	NBL	NBT	NBR	SBL	SBT	SBR
Lane Configurations												
Traffic Volume (veh/h)	275	20	365	20	10	15	140	415	5	45	955	305
Future Volume (veh/h)	275	20	365	20	10	15	140	415	5	45	955	305
Number	7	4	14	3	8	18	5	2	12	1	6	16
Initial Q (Qb), veh	0	0	0	0	0	0	0	0	0	0	0	0
Ped-Bike Adj(A_pbT)	1.00		0.99	1.00		0.99	1.00		1.00	1.00		1.00
Parking Bus, Adj	1.00	1.00	1.00	1.00	1.00	1.00	1.00	1.00	1.00	1.00	1.00	1.00
Adj Sat Flow, veh/h/ln	1900	1881	1881	1900	1863	1900	1863	1863	1900	1881	1881	1900
Adj Flow Rate, veh/h	296	22	392	22	11	16	151	446	5	48	1027	328
Adj No. of Lanes	0	1	1	0	1	0	1	2	0	1	2	0
Peak Hour Factor	0.93	0.93	0.93	0.93	0.93	0.93	0.93	0.93	0.93	0.93	0.93	0.93
Percent Heavy Veh, %	1	1	1	2	2	2	2	2	2	1	1	1
Cap, veh/h	321	18	464	58	32	16	184	1725	19	133	1207	382
Arrive On Green	0.29	0.29	0.29	0.29	0.29	0.29	0.10	0.48	0.48	0.07	0.45	0.45
Sat Flow, veh/h	827	61	1576	0	109	53	1774	3585	40	1792	2670	846
Grp Volume(v), veh/h	318	0	392	49	0	0	151	220	231	48	685	670
Grp Sat Flow(s),veh/h/ln	889	0	1576	162	0	0	1774	1770	1856	1792	1787	1729
Q Serve(g_s), s	0.0	0.0	21.0	0.0	0.0	0.0	7.5	6.6	6.6	2.3	30.6	31.3
Cycle Q Clear(g_c), s	26.5	0.0	21.0	26.5	0.0	0.0	7.5	6.6	6.6	2.3	30.6	31.3
Prop In Lane	0.93		1.00	0.45		0.33	1.00		0.02	1.00		0.49
Lane Grp Cap(c), veh/h	339	0	464	106	0	0	184	851	893	133	808	781
V/C Ratio(X)	0.94	0.00	0.84	0.46	0.00	0.00	0.82	0.26	0.26	0.36	0.85	0.86
Avail Cap(c_a), veh/h	339	0	464	106	0	0	207	851	893	133	808	781
HCM Platoon Ratio	1.00	1.00	1.00	1.00	1.00	1.00	1.00	1.00	1.00	1.00	1.00	1.00
Upstream Filter(I)	1.00	0.00	1.00	1.00	0.00	0.00	1.00	1.00	1.00	0.09	0.09	0.09
Uniform Delay (d), s/veh	34.1	0.0	29.8	26.3	0.0	0.0	39.5	13.8	13.8	39.6	21.9	22.1
Incr Delay (d2), s/veh	33.2	0.0	13.4	3.1	0.0	0.0	20.7	0.7	0.7	0.1	1.1	1.2
Initial Q Delay(d3),s/veh	0.0	0.0	0.0	0.0	0.0	0.0	0.0	0.0	0.0	0.0	0.0	0.0
%ile BackOfQ(50%),veh/ln	11.0	0.0	10.8	1.0	0.0	0.0	4.7	3.4	3.6	1.1	15.3	15.2
LnGrp Delay(d),s/veh	67.3	0.0	43.2	29.4	0.0	0.0	60.2	14.6	14.5	39.8	23.0	23.3
LnGrp LOS	E		D	C			E	B	B	D	C	C
Approach Vol, veh/h		710			49			602			1403	
Approach Delay, s/veh		54.0			29.4			26.0			23.7	
Approach LOS		D			C			C			C	

Timer	1	2	3	4	5	6	7	8
Assigned Phs	1	2		4	5	6		8
Phs Duration (G+Y+Rc), s	11.2	47.8		31.0	13.8	45.2		31.0
Change Period (Y+Rc), s	4.5	4.5		4.5	4.5	4.5		4.5
Max Green Setting (Gmax), s	6.7	43.3		26.5	10.5	39.5		26.5
Max Q Clear Time (g_c+I1), s	4.3	8.6		28.5	9.5	33.3		28.5
Green Ext Time (p_c), s	1.8	2.9		0.0	0.0	4.4		0.0

Intersection Summary	
HCM 2010 Ctrl Delay	32.1
HCM 2010 LOS	C

Movement	EBU	EBL	EBT	EBR	WBU	WBL	WBT	WBR	NBL	NBT	NBR	SBL
Lane Configurations												
Traffic Volume (vph)	5	125	1785	925	10	110	960	125	480	180	45	245
Future Volume (vph)	5	125	1785	925	10	110	960	125	480	180	45	245
Ideal Flow (vphpl)	1900	1900	1900	1900	1900	1900	1900	1900	1900	1900	1900	1900
Total Lost time (s)		5.0	7.0	7.0		5.0	7.3		6.0	6.0	4.0	6.0
Lane Util. Factor		1.00	0.95	1.00		1.00	0.91		0.91	0.91	1.00	0.95
Frpb, ped/bikes		1.00	1.00	1.00		1.00	1.00		1.00	1.00	0.99	1.00
Flpb, ped/bikes		1.00	1.00	1.00		1.00	1.00		1.00	1.00	1.00	1.00
Frt		1.00	1.00	0.85		1.00	0.98		1.00	1.00	0.85	1.00
Flt Protected		0.95	1.00	1.00		0.95	1.00		0.95	0.99	1.00	0.95
Satd. Flow (prot)		1768	3539	1577		1752	4927		3189	1661	1549	1681
Flt Permitted		0.25	1.00	1.00		0.12	1.00		0.95	0.99	1.00	0.95
Satd. Flow (perm)		456	3539	1577		230	4927		3189	1661	1549	1681
Peak-hour factor, PHF	0.98	0.98	0.98	0.98	0.98	0.98	0.98	0.98	0.98	0.98	0.98	0.98
Adj. Flow (vph)	5	128	1821	944	10	112	980	128	490	184	46	250
RTOR Reduction (vph)	0	0	0	218	0	0	9	0	0	0	0	0
Lane Group Flow (vph)	0	133	1821	726	0	122	1099	0	441	233	46	225
Confl. Peds. (#/hr)		4		3		3		4	16			
Confl. Bikes (#/hr)				4				1			1	
Heavy Vehicles (%)	2%	2%	2%	2%	3%	3%	3%	3%	3%	3%	3%	2%
Turn Type	Prot	Prot	NA	custom	Prot	Prot	NA		Split	NA	Free	Split
Protected Phases	5	5 8	2 9	2 9	1	1 8	6		4	4		3
Permitted Phases				4							Free	
Actuated Green, G (s)		50.2	65.4	85.4		47.6	62.5		20.0	20.0	180.0	21.0
Effective Green, g (s)		50.2	63.4	83.4		47.6	62.5		20.0	20.0	180.0	21.0
Actuated g/C Ratio		0.28	0.35	0.46		0.26	0.35		0.11	0.11	1.00	0.12
Clearance Time (s)							7.3		6.0	6.0		6.0
Vehicle Extension (s)							4.5		5.5	5.5		3.5
Lane Grp Cap (vph)		252	1246	730		184	1710		354	184	1549	196
v/s Ratio Prot		0.05	c0.51	0.35		c0.05	0.22		0.14	c0.14		0.13
v/s Ratio Perm		0.10		0.11		c0.12					0.03	
v/c Ratio		0.53	1.46	0.99		0.66	0.64		1.25	1.27	0.03	1.15
Uniform Delay, d1		59.3	58.3	48.1		63.1	49.4		80.0	80.0	0.0	79.5
Progression Factor		1.27	0.77	1.01		1.00	1.00		1.13	1.13	1.00	1.00
Incremental Delay, d2		1.4	210.7	26.0		8.7	1.9		130.4	152.8	0.0	109.8
Delay (s)		76.6	255.9	74.7		71.8	51.2		221.1	243.6	0.0	189.3
Level of Service		E	F	E		E	D		F	F	A	F
Approach Delay (s)			188.6				53.3			214.2		
Approach LOS			F				D			F		

Intersection Summary			
HCM 2000 Control Delay	163.5	HCM 2000 Level of Service	F
HCM 2000 Volume to Capacity ratio	1.18		
Actuated Cycle Length (s)	180.0	Sum of lost time (s)	28.0
Intersection Capacity Utilization	102.2%	ICU Level of Service	G
Analysis Period (min)	15		
c Critical Lane Group			

Movement	SBT	SBR
Lane Configurations		
Traffic Volume (vph)	270	150
Future Volume (vph)	270	150
Ideal Flow (vphpl)	1900	1900
Total Lost time (s)	6.0	4.0
Lane Util. Factor	0.95	1.00
Frpb, ped/bikes	1.00	0.98
Flpb, ped/bikes	1.00	1.00
Frt	1.00	0.85
Flt Protected	1.00	1.00
Satd. Flow (prot)	1762	1555
Flt Permitted	1.00	1.00
Satd. Flow (perm)	1762	1555
Peak-hour factor, PHF	0.98	0.98
Adj. Flow (vph)	276	153
RTOR Reduction (vph)	0	0
Lane Group Flow (vph)	301	153
Confl. Peds. (#/hr)		16
Confl. Bikes (#/hr)		4
Heavy Vehicles (%)	2%	2%
Turn Type	NA	Free
Protected Phases	3	
Permitted Phases		Free
Actuated Green, G (s)	21.0	180.0
Effective Green, g (s)	21.0	180.0
Actuated g/C Ratio	0.12	1.00
Clearance Time (s)	6.0	
Vehicle Extension (s)	3.5	
Lane Grp Cap (vph)	205	1555
v/s Ratio Prot	c0.17	
v/s Ratio Perm		c0.10
v/c Ratio	1.47	0.10
Uniform Delay, d1	79.5	0.0
Progression Factor	1.00	1.00
Incremental Delay, d2	235.4	0.1
Delay (s)	314.9	0.1
Level of Service	F	A
Approach Delay (s)	202.3	
Approach LOS	F	

Intersection Summary

Movement	EBL	EBT	EBR	WBL	WBT	WBR	NBU	NBL	NBT	NBR	SBU	SBL
Lane Configurations												
Traffic Volume (vph)	355	5	160	0	5	5	5	120	1395	5	5	10
Future Volume (vph)	355	5	160	0	5	5	5	120	1395	5	5	10
Ideal Flow (vphpl)	1900	1900	1900	1900	1900	1900	1900	1900	1900	1900	1900	1900
Total Lost time (s)	5.0	5.0			5.0			5.0	5.0			5.0
Lane Util. Factor	0.97	1.00			1.00			1.00	0.91			1.00
Frpb, ped/bikes	1.00	0.97			1.00			1.00	1.00			1.00
Flpb, ped/bikes	1.00	1.00			1.00			1.00	1.00			1.00
Frt	1.00	0.85			0.93			1.00	1.00			1.00
Flt Protected	0.95	1.00			1.00			0.95	1.00			0.95
Satd. Flow (prot)	3433	1547			1772			1752	5033			1770
Flt Permitted	0.95	1.00			1.00			0.95	1.00			0.95
Satd. Flow (perm)	3433	1547			1772			1752	5033			1770
Peak-hour factor, PHF	0.98	0.98	0.98	0.98	0.98	0.98	0.98	0.98	0.98	0.98	0.98	0.98
Adj. Flow (vph)	362	5	163	0	5	5	5	122	1423	5	5	10
RTOR Reduction (vph)	0	142	0	0	5	0	0	0	0	0	0	0
Lane Group Flow (vph)	362	26	0	0	5	0	0	127	1428	0	0	15
Confl. Peds. (#/hr)			3	3				4		3		3
Confl. Bikes (#/hr)			7									
Heavy Vehicles (%)	2%	2%	2%	0%	0%	0%	3%	3%	3%	3%	2%	2%
Turn Type	Split	NA			NA		Prot	Prot	NA		Prot	Prot
Protected Phases	8	8		4	4		5	5	2		1	1
Permitted Phases												
Actuated Green, G (s)	23.5	23.5			2.5			17.4	129.8			4.2
Effective Green, g (s)	23.5	23.5			2.5			17.4	129.8			4.2
Actuated g/C Ratio	0.13	0.13			0.01			0.10	0.72			0.02
Clearance Time (s)	5.0	5.0			5.0			5.0	5.0			5.0
Vehicle Extension (s)	2.0	2.0			2.0			2.0	4.0			2.0
Lane Grp Cap (vph)	448	201			24			169	3629			41
v/s Ratio Prot	c0.11	0.02			c0.00			c0.07	0.28			0.01
v/s Ratio Perm												
v/c Ratio	0.81	0.13			0.21			0.75	0.39			0.37
Uniform Delay, d1	76.1	69.2			87.8			79.2	9.8			86.6
Progression Factor	1.00	1.00			1.00			0.93	0.53			1.00
Incremental Delay, d2	9.7	0.1			1.6			9.8	0.2			2.0
Delay (s)	85.8	69.3			89.4			83.1	5.4			88.6
Level of Service	F	E			F			F	A			F
Approach Delay (s)		80.6			89.4				11.7			
Approach LOS		F			F				B			

Intersection Summary			
HCM 2000 Control Delay	28.0	HCM 2000 Level of Service	C
HCM 2000 Volume to Capacity ratio	0.80		
Actuated Cycle Length (s)	180.0	Sum of lost time (s)	20.0
Intersection Capacity Utilization	88.5%	ICU Level of Service	E
Analysis Period (min)	15		
c Critical Lane Group			

Movement	SBT	SBR
Lane Configurations		
Traffic Volume (vph)	2460	170
Future Volume (vph)	2460	170
Ideal Flow (vphpl)	1900	1900
Total Lost time (s)	5.0	
Lane Util. Factor	0.91	
Frpb, ped/bikes	1.00	
Flpb, ped/bikes	1.00	
Frt	0.99	
Flt Protected	1.00	
Satd. Flow (prot)	5025	
Flt Permitted	1.00	
Satd. Flow (perm)	5025	
Peak-hour factor, PHF	0.98	0.98
Adj. Flow (vph)	2510	173
RTOR Reduction (vph)	3	0
Lane Group Flow (vph)	2680	0
Confl. Peds. (#/hr)		4
Confl. Bikes (#/hr)		7
Heavy Vehicles (%)	2%	2%
Turn Type	NA	
Protected Phases	6	
Permitted Phases		
Actuated Green, G (s)	116.6	
Effective Green, g (s)	116.6	
Actuated g/C Ratio	0.65	
Clearance Time (s)	5.0	
Vehicle Extension (s)	4.0	
Lane Grp Cap (vph)	3255	
v/s Ratio Prot	c0.53	
v/s Ratio Perm		
v/c Ratio	0.82	
Uniform Delay, d1	23.9	
Progression Factor	1.00	
Incremental Delay, d2	2.5	
Delay (s)	26.4	
Level of Service	C	
Approach Delay (s)	26.8	
Approach LOS	C	

Intersection Summary

Movement	EBL	EBT	EBR	WBL	WBT	WBR	NBL	NBT	NBR	SBL	SBT	SBR
Lane Configurations												
Traffic Volume (veh/h)	290	20	385	20	10	15	150	460	5	50	1055	325
Future Volume (veh/h)	290	20	385	20	10	15	150	460	5	50	1055	325
Number	7	4	14	3	8	18	5	2	12	1	6	16
Initial Q (Qb), veh	0	0	0	0	0	0	0	0	0	0	0	0
Ped-Bike Adj(A_pbT)	1.00		0.99	1.00		0.99	1.00		1.00	1.00		1.00
Parking Bus, Adj	1.00	1.00	1.00	1.00	1.00	1.00	1.00	1.00	1.00	1.00	1.00	1.00
Adj Sat Flow, veh/h/ln	1900	1881	1881	1900	1863	1900	1863	1863	1900	1881	1881	1900
Adj Flow Rate, veh/h	312	22	414	22	11	16	161	495	5	54	1134	349
Adj No. of Lanes	0	1	1	0	1	0	1	2	0	1	2	0
Peak Hour Factor	0.93	0.93	0.93	0.93	0.93	0.93	0.93	0.93	0.93	0.93	0.93	0.93
Percent Heavy Veh, %	1	1	1	2	2	2	2	2	2	1	1	1
Cap, veh/h	313	17	446	58	32	16	194	1759	18	137	1236	375
Arrive On Green	0.28	0.28	0.28	0.28	0.28	0.28	0.11	0.49	0.49	0.08	0.46	0.46
Sat Flow, veh/h	831	59	1575	0	113	55	1774	3590	36	1792	2701	819
Grp Volume(v), veh/h	334	0	414	49	0	0	161	244	256	54	745	738
Grp Sat Flow(s),veh/h/ln	889	0	1575	169	0	0	1774	1770	1856	1792	1787	1733
Q Serve(g_s), s	0.0	0.0	23.0	0.0	0.0	0.0	8.0	7.3	7.3	2.6	34.9	36.2
Cycle Q Clear(g_c), s	25.5	0.0	23.0	25.5	0.0	0.0	8.0	7.3	7.3	2.6	34.9	36.2
Prop In Lane	0.93		1.00	0.45		0.33	1.00		0.02	1.00		0.47
Lane Grp Cap(c), veh/h	329	0	446	106	0	0	194	867	910	137	818	793
V/C Ratio(X)	1.01	0.00	0.93	0.46	0.00	0.00	0.83	0.28	0.28	0.39	0.91	0.93
Avail Cap(c_a), veh/h	329	0	446	106	0	0	195	867	910	137	818	793
HCM Platoon Ratio	1.00	1.00	1.00	1.00	1.00	1.00	1.00	1.00	1.00	1.00	1.00	1.00
Upstream Filter(I)	1.00	0.00	1.00	1.00	0.00	0.00	1.00	1.00	1.00	0.09	0.09	0.09
Uniform Delay (d), s/veh	35.2	0.0	31.4	26.7	0.0	0.0	39.3	13.6	13.6	39.6	22.7	23.1
Incr Delay (d2), s/veh	53.3	0.0	25.6	3.1	0.0	0.0	25.0	0.8	0.8	0.2	1.9	2.5
Initial Q Delay(d3),s/veh	0.1	0.0	0.0	0.0	0.0	0.0	0.0	0.0	0.0	0.0	0.0	0.0
%ile BackOfQ(50%),veh/ln	13.0	0.0	13.1	1.0	0.0	0.0	5.3	3.8	4.0	1.3	17.6	17.8
LnGrp Delay(d),s/veh	88.6	0.0	57.0	29.9	0.0	0.0	64.3	14.4	14.4	39.7	24.6	25.6
LnGrp LOS	F		E	C			E	B	B	D	C	C
Approach Vol, veh/h		748			49			661			1537	
Approach Delay, s/veh		71.1			29.9			26.5			25.6	
Approach LOS		E			C			C			C	

Timer	1	2	3	4	5	6	7	8
Assigned Phs	1	2		4	5	6		8
Phs Duration (G+Y+Rc), s	11.4	48.6		30.0	14.3	45.7		30.0
Change Period (Y+Rc), s	4.5	4.5		4.5	4.5	4.5		4.5
Max Green Setting (Gmax), s	6.9	44.1		25.5	9.9	41.1		25.5
Max Q Clear Time (g_c+I1), s	4.6	9.3		27.5	10.0	38.2		27.5
Green Ext Time (p_c), s	1.9	3.3		0.0	0.0	2.3		0.0

Intersection Summary	
HCM 2010 Ctrl Delay	37.3
HCM 2010 LOS	D

Movement	EBU	EBL	EBT	EBR	WBU	WBL	WBT	WBR	NBL	NBT	NBR	SBL
Lane Configurations												
Traffic Volume (vph)	5	135	1895	1005	10	125	1020	135	510	205	50	260
Future Volume (vph)	5	135	1895	1005	10	125	1020	135	510	205	50	260
Ideal Flow (vphpl)	1900	1900	1900	1900	1900	1900	1900	1900	1900	1900	1900	1900
Total Lost time (s)		5.0	7.0	7.0		5.0	7.3		6.0	6.0	4.0	6.0
Lane Util. Factor		1.00	0.95	1.00		1.00	0.91		0.91	0.91	1.00	0.95
Frpb, ped/bikes		1.00	1.00	1.00		1.00	1.00		1.00	1.00	0.99	1.00
Flpb, ped/bikes		1.00	1.00	1.00		1.00	1.00		1.00	1.00	1.00	1.00
Frt		1.00	1.00	0.85		1.00	0.98		1.00	1.00	0.85	1.00
Flt Protected		0.95	1.00	1.00		0.95	1.00		0.95	0.99	1.00	0.95
Satd. Flow (prot)		1769	3539	1578		1752	4926		3189	1662	1549	1681
Flt Permitted		0.23	1.00	1.00		0.12	1.00		0.95	0.99	1.00	0.95
Satd. Flow (perm)		424	3539	1578		224	4926		3189	1662	1549	1681
Peak-hour factor, PHF	0.98	0.98	0.98	0.98	0.98	0.98	0.98	0.98	0.98	0.98	0.98	0.98
Adj. Flow (vph)	5	138	1934	1026	10	128	1041	138	520	209	51	265
RTOR Reduction (vph)	0	0	0	208	0	0	10	0	0	0	0	0
Lane Group Flow (vph)	0	143	1934	818	0	138	1169	0	468	261	51	238
Confl. Peds. (#/hr)		4		3		3		4	16			
Confl. Bikes (#/hr)				4				1			1	
Heavy Vehicles (%)	2%	2%	2%	2%	3%	3%	3%	3%	3%	3%	3%	2%
Turn Type	Prot	Prot	NA	custom	Prot	Prot	NA		Split	NA	Free	Split
Protected Phases	5	5 8	2 9	2 9	1	1 8	6		4	4		3
Permitted Phases				4							Free	
Actuated Green, G (s)		56.0	68.0	88.0		41.0	54.7		20.0	20.0	180.0	23.0
Effective Green, g (s)		56.0	68.0	88.0		41.0	54.7		20.0	20.0	180.0	23.0
Actuated g/C Ratio		0.31	0.38	0.49		0.23	0.30		0.11	0.11	1.00	0.13
Clearance Time (s)							7.3		6.0	6.0		6.0
Vehicle Extension (s)							4.5		5.5	5.5		3.5
Lane Grp Cap (vph)		303	1336	771		118	1496		354	184	1549	214
v/s Ratio Prot		0.06	c0.55	0.40		0.05	c0.24		0.15	c0.16		0.14
v/s Ratio Perm		0.09		0.12		c0.21					0.03	
v/c Ratio		0.47	1.45	1.06		1.17	0.78		1.32	1.42	0.03	1.11
Uniform Delay, d1		46.5	56.0	46.0		68.9	57.2		80.0	80.0	0.0	78.5
Progression Factor		0.69	0.54	1.98		1.00	1.00		0.90	0.90	1.00	1.00
Incremental Delay, d2		0.7	204.0	43.1		135.5	4.1		161.4	213.9	0.0	94.8
Delay (s)		32.8	234.4	134.1		204.4	61.3		233.3	285.9	0.0	173.3
Level of Service		C	F	F		F	E		F	F	A	F
Approach Delay (s)			192.0				76.3			235.6		
Approach LOS			F				E			F		

Intersection Summary			
HCM 2000 Control Delay	173.7	HCM 2000 Level of Service	F
HCM 2000 Volume to Capacity ratio	1.37		
Actuated Cycle Length (s)	180.0	Sum of lost time (s)	28.0
Intersection Capacity Utilization	108.9%	ICU Level of Service	G
Analysis Period (min)	15		
c Critical Lane Group			

Movement	SBT	SBR
Lane Configurations		
Traffic Volume (vph)	305	160
Future Volume (vph)	305	160
Ideal Flow (vphpl)	1900	1900
Total Lost time (s)	6.0	4.0
Lane Util. Factor	0.95	1.00
Frpb, ped/bikes	1.00	0.98
Flpb, ped/bikes	1.00	1.00
Frt	1.00	0.85
Flt Protected	1.00	1.00
Satd. Flow (prot)	1763	1555
Flt Permitted	1.00	1.00
Satd. Flow (perm)	1763	1555
Peak-hour factor, PHF	0.98	0.98
Adj. Flow (vph)	311	163
RTOR Reduction (vph)	0	0
Lane Group Flow (vph)	338	163
Confl. Peds. (#/hr)		16
Confl. Bikes (#/hr)		4
Heavy Vehicles (%)	2%	2%
Turn Type	NA	Free
Protected Phases	3	
Permitted Phases		Free
Actuated Green, G (s)	23.0	180.0
Effective Green, g (s)	23.0	180.0
Actuated g/C Ratio	0.13	1.00
Clearance Time (s)	6.0	
Vehicle Extension (s)	3.5	
Lane Grp Cap (vph)	225	1555
v/s Ratio Prot	c0.19	
v/s Ratio Perm		0.10
v/c Ratio	1.50	0.10
Uniform Delay, d1	78.5	0.0
Progression Factor	1.00	1.00
Incremental Delay, d2	247.8	0.1
Delay (s)	326.3	0.1
Level of Service	F	A
Approach Delay (s)	205.1	
Approach LOS	F	

Intersection Summary

Movement	EBL	EBT	EBR	WBL	WBT	WBR	NBU	NBL	NBT	NBR	SBU	SBL
Lane Configurations												
Traffic Volume (vph)	375	5	170	0	5	30	5	125	1480	5	5	35
Future Volume (vph)	375	5	170	0	5	30	5	125	1480	5	5	35
Ideal Flow (vphpl)	1900	1900	1900	1900	1900	1900	1900	1900	1900	1900	1900	1900
Total Lost time (s)	5.0	5.0			5.0			5.0	5.0			5.0
Lane Util. Factor	0.97	1.00			1.00			1.00	0.91			1.00
Frpb, ped/bikes	1.00	0.97			1.00			1.00	1.00			1.00
Flpb, ped/bikes	1.00	1.00			1.00			1.00	1.00			1.00
Frt	1.00	0.85			0.88			1.00	1.00			1.00
Flt Protected	0.95	1.00			1.00			0.95	1.00			0.95
Satd. Flow (prot)	3433	1547			1679			1752	5033			1770
Flt Permitted	0.95	1.00			1.00			0.95	1.00			0.95
Satd. Flow (perm)	3433	1547			1679			1752	5033			1770
Peak-hour factor, PHF	0.98	0.98	0.98	0.98	0.98	0.98	0.98	0.98	0.98	0.98	0.98	0.98
Adj. Flow (vph)	383	5	173	0	5	31	5	128	1510	5	5	36
RTOR Reduction (vph)	0	149	0	0	30	0	0	0	0	0	0	0
Lane Group Flow (vph)	383	29	0	0	6	0	0	133	1515	0	0	41
Confl. Peds. (#/hr)			3	3				4		3		3
Confl. Bikes (#/hr)			7									
Heavy Vehicles (%)	2%	2%	2%	0%	0%	0%	3%	3%	3%	3%	2%	2%
Turn Type	Split	NA			NA		Prot	Prot	NA		Prot	Prot
Protected Phases	8	8		4	4		5	5	2		1	1
Permitted Phases												
Actuated Green, G (s)	24.6	24.6			4.0			17.0	124.2			7.2
Effective Green, g (s)	24.6	24.6			4.0			17.0	124.2			7.2
Actuated g/C Ratio	0.14	0.14			0.02			0.09	0.69			0.04
Clearance Time (s)	5.0	5.0			5.0			5.0	5.0			5.0
Vehicle Extension (s)	2.0	2.0			2.0			2.0	4.0			2.0
Lane Grp Cap (vph)	469	211			37			165	3472			70
v/s Ratio Prot	c0.11	0.02			c0.00			c0.08	0.30			0.02
v/s Ratio Perm												
v/c Ratio	0.82	0.14			0.15			0.81	0.44			0.59
Uniform Delay, d1	75.5	68.3			86.3			79.9	12.4			84.9
Progression Factor	1.00	1.00			1.00			0.85	0.40			1.00
Incremental Delay, d2	10.0	0.1			0.7			13.1	0.2			7.8
Delay (s)	85.5	68.5			87.0			80.9	5.1			92.7
Level of Service	F	E			F			F	A			F
Approach Delay (s)		80.1			87.0				11.2			
Approach LOS		F			F				B			

Intersection Summary			
HCM 2000 Control Delay	31.3	HCM 2000 Level of Service	C
HCM 2000 Volume to Capacity ratio	0.85		
Actuated Cycle Length (s)	180.0	Sum of lost time (s)	20.0
Intersection Capacity Utilization	92.4%	ICU Level of Service	F
Analysis Period (min)	15		
c Critical Lane Group			

Movement	SBT	SBR
Lane Configurations		
Traffic Volume (vph)	2610	180
Future Volume (vph)	2610	180
Ideal Flow (vphpl)	1900	1900
Total Lost time (s)	5.0	
Lane Util. Factor	0.91	
Frpb, ped/bikes	1.00	
Flpb, ped/bikes	1.00	
Frt	0.99	
Flt Protected	1.00	
Satd. Flow (prot)	5025	
Flt Permitted	1.00	
Satd. Flow (perm)	5025	
Peak-hour factor, PHF	0.98	0.98
Adj. Flow (vph)	2663	184
RTOR Reduction (vph)	4	0
Lane Group Flow (vph)	2843	0
Confl. Peds. (#/hr)		4
Confl. Bikes (#/hr)		7
Heavy Vehicles (%)	2%	2%
Turn Type	NA	
Protected Phases	6	
Permitted Phases		
Actuated Green, G (s)	114.4	
Effective Green, g (s)	114.4	
Actuated g/C Ratio	0.64	
Clearance Time (s)	5.0	
Vehicle Extension (s)	4.0	
Lane Grp Cap (vph)	3193	
v/s Ratio Prot	c0.57	
v/s Ratio Perm		
v/c Ratio	0.89	
Uniform Delay, d1	27.5	
Progression Factor	1.00	
Incremental Delay, d2	4.2	
Delay (s)	31.8	
Level of Service	C	
Approach Delay (s)	32.6	
Approach LOS	C	

Intersection Summary

Movement	EBL	EBT	EBR	WBL	WBT	WBR	NBL	NBT	NBR	SBL	SBT	SBR
Lane Configurations												
Traffic Volume (veh/h)	290	20	388	20	10	15	152	488	5	50	1107	325
Future Volume (veh/h)	290	20	388	20	10	15	152	488	5	50	1107	325
Number	7	4	14	3	8	18	5	2	12	1	6	16
Initial Q (Qb), veh	0	0	0	0	0	0	0	0	0	0	0	0
Ped-Bike Adj(A_pbT)	1.00		0.97	1.00		0.98	1.00		1.00	1.00		1.00
Parking Bus, Adj	1.00	1.00	1.00	1.00	1.00	1.00	1.00	1.00	1.00	1.00	1.00	1.00
Adj Sat Flow, veh/h/ln	1900	1881	1881	1900	1863	1900	1863	1863	1900	1881	1881	1900
Adj Flow Rate, veh/h	312	22	417	22	11	16	163	525	5	54	1190	349
Adj No. of Lanes	0	1	1	0	1	0	1	2	0	1	2	0
Peak Hour Factor	0.93	0.93	0.93	0.93	0.93	0.93	0.93	0.93	0.93	0.93	0.93	0.93
Percent Heavy Veh, %	1	1	1	2	2	2	2	2	2	1	1	1
Cap, veh/h	304	16	424	58	32	16	195	1800	17	137	1280	369
Arrive On Green	0.27	0.27	0.27	0.27	0.27	0.27	0.11	0.50	0.50	0.10	0.62	0.62
Sat Flow, veh/h	833	59	1558	0	118	57	1774	3592	34	1792	2737	789
Grp Volume(v), veh/h	334	0	417	49	0	0	163	259	271	54	770	769
Grp Sat Flow(s),veh/h/ln	891	0	1558	175	0	0	1774	1770	1857	1792	1787	1739
Q Serve(g_s), s	0.0	0.0	23.9	0.0	0.0	0.0	8.1	7.7	7.7	2.5	34.3	36.5
Cycle Q Clear(g_c), s	24.5	0.0	23.9	24.5	0.0	0.0	8.1	7.7	7.7	2.5	34.3	36.5
Prop In Lane	0.93		1.00	0.45		0.33	1.00		0.02	1.00		0.45
Lane Grp Cap(c), veh/h	320	0	424	106	0	0	195	887	930	137	836	813
V/C Ratio(X)	1.04	0.00	0.98	0.46	0.00	0.00	0.84	0.29	0.29	0.39	0.92	0.95
Avail Cap(c_a), veh/h	320	0	424	106	0	0	195	887	930	137	836	813
HCM Platoon Ratio	1.00	1.00	1.00	1.00	1.00	1.00	1.00	1.00	1.00	1.33	1.33	1.33
Upstream Filter(I)	1.00	0.00	1.00	1.00	0.00	0.00	1.00	1.00	1.00	0.09	0.09	0.09
Uniform Delay (d), s/veh	35.7	0.0	32.5	27.2	0.0	0.0	39.3	13.1	13.1	38.5	15.5	15.9
Incr Delay (d2), s/veh	62.2	0.0	39.2	3.1	0.0	0.0	25.7	0.8	0.8	0.2	2.1	3.1
Initial Q Delay(d3),s/veh	0.0	0.0	0.0	0.0	0.0	0.0	0.0	0.0	0.0	0.0	0.0	0.0
%ile BackOfQ(50%),veh/ln	13.4	0.0	14.9	1.0	0.0	0.0	5.4	3.9	4.1	1.3	16.9	17.6
LnGrp Delay(d),s/veh	97.9	0.0	71.7	30.4	0.0	0.0	65.0	13.9	13.9	38.6	17.7	19.0
LnGrp LOS	F		E	C			E	B	B	D	B	B
Approach Vol, veh/h		751			49			693			1593	
Approach Delay, s/veh		83.3			30.4			25.9			19.0	
Approach LOS		F			C			C			B	

Timer	1	2	3	4	5	6	7	8
Assigned Phs	1	2		4	5	6		8
Phs Duration (G+Y+Rc), s	11.4	49.6		29.0	14.4	46.6		29.0
Change Period (Y+Rc), s	4.5	4.5		4.5	4.5	4.5		4.5
Max Green Setting (Gmax), s	6.9	45.1		24.5	9.9	42.1		24.5
Max Q Clear Time (g_c+I1), s	4.5	9.7		26.5	10.1	38.5		26.5
Green Ext Time (p_c), s	2.0	3.5		0.0	0.0	2.9		0.0

Intersection Summary	
HCM 2010 Ctrl Delay	36.4
HCM 2010 LOS	D

Movement	EBU	EBL	EBT	EBR	WBU	WBL	WBT	WBR	NBL	NBT	NBR	SBL
Lane Configurations												
Traffic Volume (vph)	5	135	1895	1039	10	131	1020	135	528	212	53	260
Future Volume (vph)	5	135	1895	1039	10	131	1020	135	528	212	53	260
Ideal Flow (vphpl)	1900	1900	1900	1900	1900	1900	1900	1900	1900	1900	1900	1900
Total Lost time (s)		5.0	7.0	7.0		5.0	7.3		6.0	6.0	4.0	6.0
Lane Util. Factor		1.00	0.95	1.00		1.00	0.91		0.91	0.91	1.00	0.95
Frpb, ped/bikes		1.00	1.00	1.00		1.00	1.00		1.00	1.00	0.99	1.00
Flpb, ped/bikes		1.00	1.00	1.00		1.00	1.00		1.00	1.00	1.00	1.00
Frt		1.00	1.00	0.85		1.00	0.98		1.00	1.00	0.85	1.00
Flt Protected		0.95	1.00	1.00		0.95	1.00		0.95	0.99	1.00	0.95
Satd. Flow (prot)		1769	3539	1578		1752	4926		3189	1662	1549	1681
Flt Permitted		0.23	1.00	1.00		0.12	1.00		0.95	0.99	1.00	0.95
Satd. Flow (perm)		424	3539	1578		224	4926		3189	1662	1549	1681
Peak-hour factor, PHF	0.98	0.98	0.98	0.98	0.98	0.98	0.98	0.98	0.98	0.98	0.98	0.98
Adj. Flow (vph)	5	138	1934	1060	10	134	1041	138	539	216	54	265
RTOR Reduction (vph)	0	0	0	215	0	0	10	0	0	0	0	0
Lane Group Flow (vph)	0	143	1934	845	0	144	1169	0	485	270	54	238
Confl. Peds. (#/hr)		4		3		3		4	16			
Confl. Bikes (#/hr)				4				1			1	
Heavy Vehicles (%)	2%	2%	2%	2%	3%	3%	3%	3%	3%	3%	3%	2%
Turn Type	Prot	Prot	NA	custom	Prot	Prot	NA		Split	NA	Free	Split
Protected Phases	5	5 8	2 9	2 9	1	1 8	6		4	4		3
Permitted Phases				4							Free	
Actuated Green, G (s)		56.7	69.0	89.0		41.0	55.0		20.0	20.0	180.0	22.0
Effective Green, g (s)		56.7	69.0	89.0		41.0	55.0		20.0	20.0	180.0	22.0
Actuated g/C Ratio		0.32	0.38	0.49		0.23	0.31		0.11	0.11	1.00	0.12
Clearance Time (s)							7.3		6.0	6.0		6.0
Vehicle Extension (s)							4.5		5.5	5.5		3.5
Lane Grp Cap (vph)		310	1356	780		118	1505		354	184	1549	205
v/s Ratio Prot		0.06	c0.55	0.42		0.05	c0.24		0.15	c0.16		0.14
v/s Ratio Perm		0.08		0.12		c0.22					0.03	
v/c Ratio		0.46	1.43	1.08		1.22	0.78		1.37	1.47	0.03	1.16
Uniform Delay, d1		45.9	55.5	45.5		68.9	56.9		80.0	80.0	0.0	79.0
Progression Factor		0.69	0.54	2.07		1.00	1.00		0.84	0.84	1.00	1.00
Incremental Delay, d2		0.7	194.4	50.8		153.7	4.0		181.5	234.3	0.0	113.0
Delay (s)		32.4	224.5	145.1		222.6	60.9		248.7	301.5	0.0	192.0
Level of Service		C	F	F		F	E		F	F	A	F
Approach Delay (s)			188.9				78.5			249.7		
Approach LOS			F				E			F		

Intersection Summary			
HCM 2000 Control Delay	179.1	HCM 2000 Level of Service	F
HCM 2000 Volume to Capacity ratio	1.40		
Actuated Cycle Length (s)	180.0	Sum of lost time (s)	28.0
Intersection Capacity Utilization	110.3%	ICU Level of Service	H
Analysis Period (min)	15		
c Critical Lane Group			

Movement	SBT	SBR
Lane Configurations		
Traffic Volume (vph)	317	160
Future Volume (vph)	317	160
Ideal Flow (vphpl)	1900	1900
Total Lost time (s)	6.0	4.0
Lane Util. Factor	0.95	1.00
Frpb, ped/bikes	1.00	0.98
Flpb, ped/bikes	1.00	1.00
Frt	1.00	0.85
Flt Protected	1.00	1.00
Satd. Flow (prot)	1763	1555
Flt Permitted	1.00	1.00
Satd. Flow (perm)	1763	1555
Peak-hour factor, PHF	0.98	0.98
Adj. Flow (vph)	323	163
RTOR Reduction (vph)	0	0
Lane Group Flow (vph)	350	163
Confl. Peds. (#/hr)		16
Confl. Bikes (#/hr)		4
Heavy Vehicles (%)	2%	2%
Turn Type	NA	Free
Protected Phases	3	
Permitted Phases		Free
Actuated Green, G (s)	22.0	180.0
Effective Green, g (s)	22.0	180.0
Actuated g/C Ratio	0.12	1.00
Clearance Time (s)	6.0	
Vehicle Extension (s)	3.5	
Lane Grp Cap (vph)	215	1555
v/s Ratio Prot	c0.20	
v/s Ratio Perm		0.10
v/c Ratio	1.63	0.10
Uniform Delay, d1	79.0	0.0
Progression Factor	1.00	1.00
Incremental Delay, d2	302.8	0.1
Delay (s)	381.8	0.1
Level of Service	F	A
Approach Delay (s)	238.8	
Approach LOS	F	

Intersection Summary

Movement	EBL	EBT	EBR	WBL	WBT	WBR	NBU	NBL	NBT	NBR	SBU	SBL
Lane Configurations												
Traffic Volume (vph)	375	5	179	0	5	30	5	130	1493	5	5	35
Future Volume (vph)	375	5	179	0	5	30	5	130	1493	5	5	35
Ideal Flow (vphpl)	1900	1900	1900	1900	1900	1900	1900	1900	1900	1900	1900	1900
Total Lost time (s)	5.0	5.0			5.0			5.0	5.0			5.0
Lane Util. Factor	0.97	1.00			1.00			1.00	0.91			1.00
Frpb, ped/bikes	1.00	0.97			1.00			1.00	1.00			1.00
Flpb, ped/bikes	1.00	1.00			1.00			1.00	1.00			1.00
Frt	1.00	0.85			0.88			1.00	1.00			1.00
Flt Protected	0.95	1.00			1.00			0.95	1.00			0.95
Satd. Flow (prot)	3433	1547			1679			1752	5033			1770
Flt Permitted	0.95	1.00			1.00			0.95	1.00			0.95
Satd. Flow (perm)	3433	1547			1679			1752	5033			1770
Peak-hour factor, PHF	0.98	0.98	0.98	0.98	0.98	0.98	0.98	0.98	0.98	0.98	0.98	0.98
Adj. Flow (vph)	383	5	183	0	5	31	5	133	1523	5	5	36
RTOR Reduction (vph)	0	142	0	0	30	0	0	0	0	0	0	0
Lane Group Flow (vph)	383	46	0	0	6	0	0	138	1528	0	0	41
Confl. Peds. (#/hr)			3	3				4		3		3
Confl. Bikes (#/hr)			7									
Heavy Vehicles (%)	2%	2%	2%	0%	0%	0%	3%	3%	3%	3%	2%	2%
Turn Type	Split	NA			NA		Prot	Prot	NA		Prot	Prot
Protected Phases	8	8		4	4		5	5	2		1	1
Permitted Phases												
Actuated Green, G (s)	24.6	24.6			4.0			16.7	124.2			7.2
Effective Green, g (s)	24.6	24.6			4.0			16.7	124.2			7.2
Actuated g/C Ratio	0.14	0.14			0.02			0.09	0.69			0.04
Clearance Time (s)	5.0	5.0			5.0			5.0	5.0			5.0
Vehicle Extension (s)	2.0	2.0			2.0			2.0	4.0			2.0
Lane Grp Cap (vph)	469	211			37			162	3472			70
v/s Ratio Prot	c0.11	0.03			c0.00			c0.08	0.30			0.02
v/s Ratio Perm												
v/c Ratio	0.82	0.22			0.15			0.85	0.44			0.59
Uniform Delay, d1	75.5	69.2			86.3			80.4	12.4			84.9
Progression Factor	1.00	1.00			1.00			0.85	0.39			1.00
Incremental Delay, d2	10.0	0.2			0.7			18.3	0.2			7.8
Delay (s)	85.5	69.4			87.0			86.6	5.1			92.7
Level of Service	F	E			F			F	A			F
Approach Delay (s)		80.2			87.0				11.8			
Approach LOS		F			F				B			

Intersection Summary			
HCM 2000 Control Delay	31.7	HCM 2000 Level of Service	C
HCM 2000 Volume to Capacity ratio	0.86		
Actuated Cycle Length (s)	180.0	Sum of lost time (s)	20.0
Intersection Capacity Utilization	93.2%	ICU Level of Service	F
Analysis Period (min)	15		
c Critical Lane Group			

Movement	SBT	SBR
Lane Configurations		
Traffic Volume (vph)	2635	180
Future Volume (vph)	2635	180
Ideal Flow (vphpl)	1900	1900
Total Lost time (s)	5.0	
Lane Util. Factor	0.91	
Frpb, ped/bikes	1.00	
Flpb, ped/bikes	1.00	
Frt	0.99	
Flt Protected	1.00	
Satd. Flow (prot)	5025	
Flt Permitted	1.00	
Satd. Flow (perm)	5025	
Peak-hour factor, PHF	0.98	0.98
Adj. Flow (vph)	2689	184
RTOR Reduction (vph)	4	0
Lane Group Flow (vph)	2869	0
Confl. Peds. (#/hr)		4
Confl. Bikes (#/hr)		7
Heavy Vehicles (%)	2%	2%
Turn Type	NA	
Protected Phases	6	
Permitted Phases		
Actuated Green, G (s)	114.7	
Effective Green, g (s)	114.7	
Actuated g/C Ratio	0.64	
Clearance Time (s)	5.0	
Vehicle Extension (s)	4.0	
Lane Grp Cap (vph)	3202	
v/s Ratio Prot	c0.57	
v/s Ratio Perm		
v/c Ratio	0.90	
Uniform Delay, d1	27.6	
Progression Factor	1.00	
Incremental Delay, d2	4.4	
Delay (s)	32.0	
Level of Service	C	
Approach Delay (s)	32.9	
Approach LOS	C	

Intersection Summary

Intersection	
Int Delay, s/veh	0.6

Movement	WBL	WBR	NBT	NBR	SBL	SBT
Traffic Vol, veh/h	3	30	610	6	55	1425
Future Vol, veh/h	3	30	610	6	55	1425
Conflicting Peds, #/hr	0	0	0	0	0	0
Sign Control	Stop	Stop	Free	Free	Free	Free
RT Channelized	-	None	-	None	-	None
Storage Length	0	-	-	-	100	-
Veh in Median Storage, #	0	-	0	-	-	0
Grade, %	0	-	0	-	-	0
Peak Hour Factor	93	93	93	93	93	93
Heavy Vehicles, %	2	2	2	2	2	2
Mvmt Flow	3	32	656	6	59	1532

Major/Minor	Minor1		Major1		Major2	
Conflicting Flow All	2310	659	0	0	662	0
Stage 1	659	-	-	-	-	-
Stage 2	1651	-	-	-	-	-
Critical Hdwy	6.42	6.22	-	-	4.12	-
Critical Hdwy Stg 1	5.42	-	-	-	-	-
Critical Hdwy Stg 2	5.42	-	-	-	-	-
Follow-up Hdwy	3.518	3.318	-	-	2.218	-
Pot Cap-1 Maneuver	42	464	-	-	927	-
Stage 1	515	-	-	-	-	-
Stage 2	172	-	-	-	-	-
Platoon blocked, %			-	-		-
Mov Cap-1 Maneuver	39	464	-	-	927	-
Mov Cap-2 Maneuver	39	-	-	-	-	-
Stage 1	515	-	-	-	-	-
Stage 2	161	-	-	-	-	-

Approach	WB	NB	SB
HCM Control Delay, s	23.2	0	0.3
HCM LOS	C		

Minor Lane/Major Mvmt	NBT	NBR	WBLn1	SBL	SBT
Capacity (veh/h)	-	-	233	927	-
HCM Lane V/C Ratio	-	-	0.152	0.064	-
HCM Control Delay (s)	-	-	23.2	9.1	-
HCM Lane LOS	-	-	C	A	-
HCM 95th %tile Q(veh)	-	-	0.5	0.2	-

Appendix D:Sight Distance Triangles

Entering Sight Distance Triangles

The Bond

FIGURE

D1

transpogroup
WHAT TRANSPORTATION CAN BE.

May 18, 2016 - 4:23pm mattt C:\Users\mattt\appdata\local\temp\AcPublish_26020\Unsaved Drawing1.dwg Layout: Entering Sight Distance

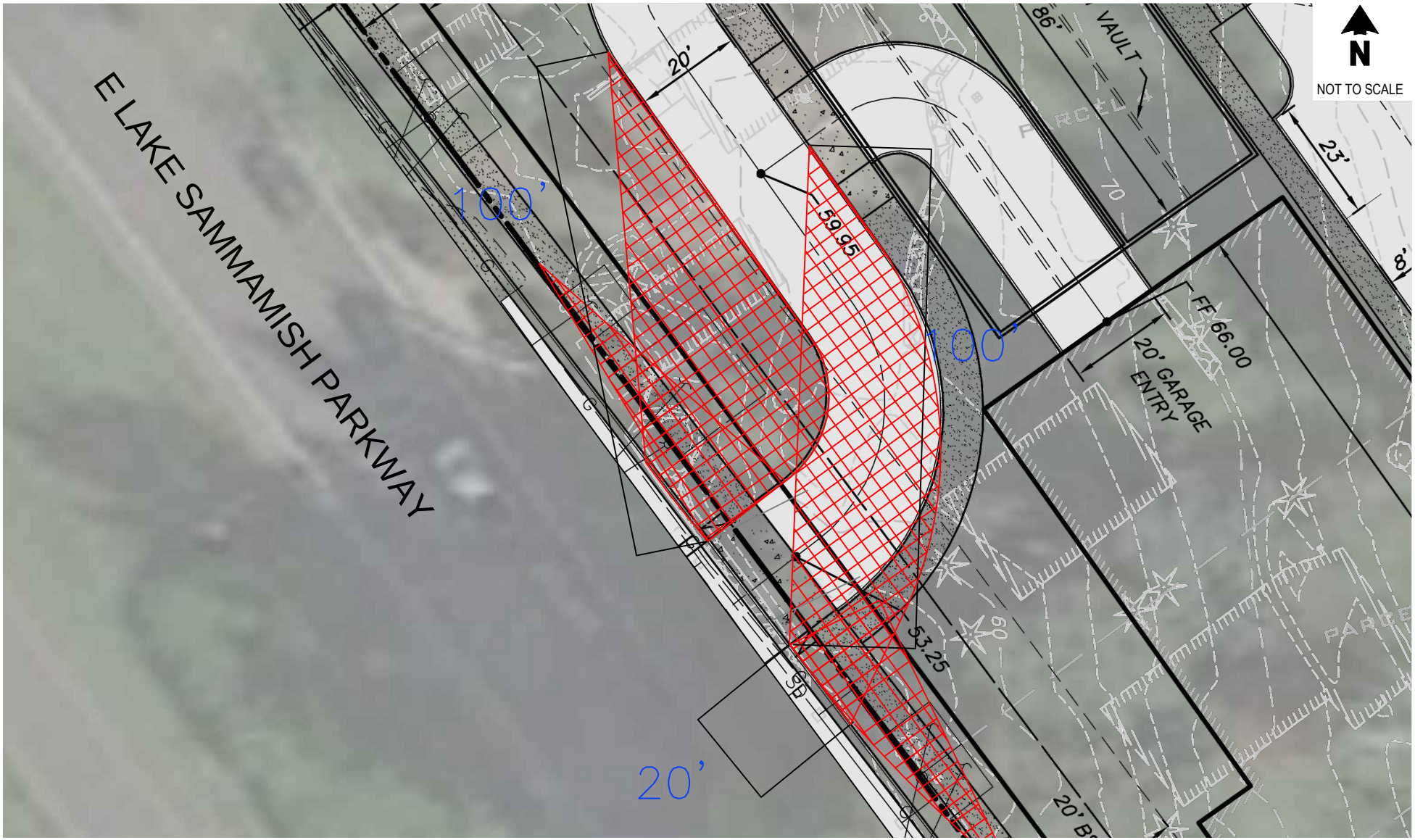

Intersection Clearance Triangles

The Bond

FIGURE

D2

transpogroup
WHAT TRANSPORTATION CAN BE.

May 18, 2016 - 4:23pm mattt C:\Users\mattt\appdata\local\temp\AcPublish_26020\Unsaved Drawing1.dwg Layout: Clearance Triangles