Volume 1

XREF LIST
Ltscale: 1000
Resolved
KCRD
RED ROAD
GIS BNDY

CITY OF REDMOND

Redmond Central Connector Phase II

Federal Aid No. CM-1065(011)
City Project No. 20021314
January 2016

City of Redmond
WASHINGTON

otak
HanmiGlobal Partner

11241 Willows Road NE
Suite 200
Redmond, Washington 98052
Phone: (425) 822-4446
FAX: (425) 827-9577
www.otak.com

APPROVED FOR CONSTRUCTION

DAVID M. PAUL, P.E.
CITY ENGINEER
CITY OF REDMOND

1-14-16
DATE

CONTACT PERSONNEL

NAME	AGENCY	PHONE
MIKE HALEY, P.E.	CITY OF REDMOND	425.556.2723
NICO VANDERHORST, P.E.	OTAK	425.822.4446
TOUTA PHENGSAVATH, P.E.	OTAK	425.822.4446
KELLY PURNELL	PUGET SOUND ENERGY	425.462.3488
MIKE HAKAHAN	FRONTIER COMMUNICATIONS	425.263.4038
JILL LOOK	COMCAST	425.263.5346
DENA KLUDSIKOFSKY	CENTURY LINK	206.345.0173
RICHARD GARCIA	METRO TRANSIT	206.684.2732

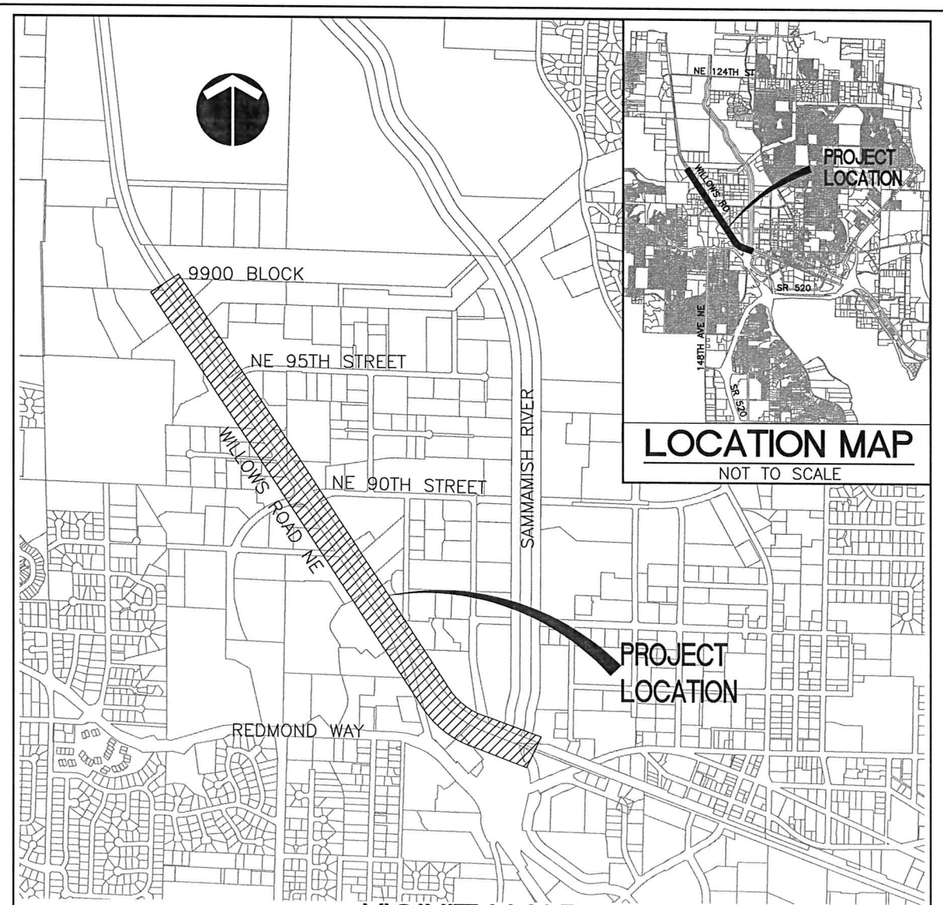

LOCATION MAP
NOT TO SCALE

VICINITY MAP
NOT TO SCALE

INDEX OF DRAWINGS

DRAWING NO.	SHEET NO.	DESCRIPTION
		GENERAL
1.01	1	COVER SHEET, VICINITY MAP AND SHEET INDEX
1.02	2	LEGEND, ABBREVIATIONS, AND GENERAL NOTES
1.03–1.04	3–4	CONSTRUCTION ALIGNMENT AND SURVEY CONTROL PLAN
		TESC AND DEMOLITION
2.01–2.08	5–12	TESC AND DEMOLITION PLAN
		TEMPORARY STREAM BYPASS
2.09	13	TEMPORARY STREAM BYPASS
		TRAIL AND DRAINAGE
3.01–3.16	14–29	TRAIL AND DRAINAGE PLAN AND PROFILE
3.17–3.24	30–37	TRAIL AND DRAINAGE DETAILS
3.25–3.26	38–39	NOT USED
		BRIDGE
4.01	40	BRIDGE LAYOUT – SAMMAMISH RIVER TRESTLE
4.02	41	BENTS 12 REPAIR – SAMMAMISH RIVER TRESTLE
4.03–4.04	42–43	PONY BENTS 6 AND 7 REPAIR – SAMMAMISH RIVER TRESTLE
4.05	44	PILE CAP REPLACEMENT DETAILS – SAMMAMISH RIVER TRESTLE
4.06	45	STRINGER REPLACEMENT DETAILS – SAMMAMISH RIVER TRESTLE
4.07	46	PILE SPLICING AND LATERAL BRACING REPAIR – SAMMAMISH RIVER TRESTLE
4.08	47	TYPICAL DECK SECTIONS – SAMMAMISH RIVER TRESTLE
4.09	48	DECK PANEL DETAILS
4.10	49	DECK PANEL ATTACHMENT DETAILS
4.11	50	RAILING POST CONNECTIONS
4.12	51	MISCELLANEOUS BRIDGE DETAILS
4.13	52	BRIDGE LAYOUT – 154TH AVENUE NE CROSSING
4.14	53	DECK REPLACEMENT DETAILS – 154TH AVENUE NE CROSSING
		SIGNAL AND ILLUMINATION
5.01–5.09	54–62	ILLUMINATION PLAN
5.06–5.08	59–61	NOT USED
5.09	62	ILLUMINATION PLAN
5.10	63	ILLUMINATION DETAILS
5.11–5.12	64–65	SIGNAL PLAN
		HARDSCAPE/URBAN DESIGN
6.01–6.08	66–73	HARDSCAPE/URBAN DESIGN PLANS
6.09	74	HARDSCAPE/URBAN DESIGN DETAILS
6.10	75	NOT USED
6.11	76	HARDSCAPE/URBAN DESIGN DETAILS
6.12–6.19	–	NOT USED
6.20–6.24	77–81	HARDSCAPE/URBAN DESIGN DETAILS
6.25–6.29	–	NOT USED
6.30–6.32	82–84	NOT USED
6.33–6.39	–	NOT USED
6.40–6.43	85–88	HARDSCAPE/URBAN DESIGN PLANS
		LANDSCAPE IMPROVEMENTS
7.01–7.08	89–96	LANDSCAPE PLANS
7.09–7.10	97–98	PLANTING SCHEDULE & DETAILS
		SIGNING AND STRIPING
8.01–8.08	99–106	SIGNING AND STRIPING PLAN
		TRAFFIC CONTROL PLAN
9.01–9.04	107–110	TRAFFIC CONTROL PLAN
		BRIDGE REPAIR CONSTRUCTION ACCESS
9.05	111	BRIDGE REPAIR CONSTRUCTION ACCESS

Plotted: Jan 14, 2016 – 9:25am touta K:\project\32200\32240\Dwg\1.01.dwg Layout Name: 1.01

XREF LIST
Ltscale: 1
Resolved
ttlblk

SYMBOL LEGEND

EXISTING	PROPOSED	DESCRIPTION
		COMMUNICATION RISER
		COMMUNICATION MANHOLE
		COMMUNICATION VAULT
		ELECTRICAL METER
		ELECTRICAL HANDHOLD
		POWER MANHOLE
		POWER VAULT
		POWER TRANSFORMER
		GAS VALVE
		GAS METER
		GAS VAULT
		SEWER MANHOLE
		CLEANOUT
		CATCH BASIN (TYPE 1)
		CATCH BASIN (TYPE 2)
		STORM DRAIN MANHOLE
		SUBSURFACE JUNCTION BOX
		SURFACE JUNCTION BOX
		PEDESTRIAN POLE
		TRAFFIC POLE
		TRAFFIC SIGNAL HEAD
		TRAFFIC SIGNAL CABINET
		LIGHT POLE ORNAMENTAL
		LUMINAIRE HEAD
		STREET LIGHT OR UTILITY POLE W/ LIGHT
		UTILITY POLE
		GUY ANCHOR
		WATER METER
		WATER VALVE
		WATER MANHOLE
		WATER VAULT
		FIRE HYDRANT
		FIRE DEPARTMENT CONNECTION
		POST INDICATOR VALVE
		IRRIGATION BOX
		BOLLARD
		MAIL BOX
		SIGN
		TESTPIT
		MONITORING WELL
		SURVEY CONTROL POINT
		SURVEY MONUMENT
XXXXX		PROPERTY ADDRESS OR PARCEL NUMBER
		CONIFEROUS TREE
		DECIDUOUS TREE
		STUMP
		TREE REMOVAL
		STORM INLET PROTECTION
		PIPE INLET/OUTLET PROTECTION

LINE AND HATCHING LEGEND

EXISTING	PROPOSED	DESCRIPTION
		RIGHT OF WAY CENTERLINE
		RIGHT OF WAY MARGIN
		PROPERTY LINE
		CITY BOUNDARY
X	X	CHAIN LINK FENCE
		WOOD FENCE
W	W	WATER LINE
SS		SEWER LINE (<12")
		SEWER LINE (>12")
SD		STORM DRAIN LINE (<12")
		STORM DRAIN LINE (>12")
P	P	POWER LINE
OHL		AERIAL LINE
G	G	GAS LINE
FO		FIBER OPTIC LINE
COM		COMMUNICATION LINE
		RAILING (GUARD/HAND)
		DRIVEWAY CUTS / HC RAMPS
		UNDERGROUND UTILITY STRUCTURES
		EDGE OF GRAVEL / DIRT
		INTERMEDIATE CONTOUR
100		INDEX CONTOUR
		EDGE OF WETLAND
		EDGE OF WATER
		DITCH/STREAM CENTERLINE
		MODULAR BLOCK WALL
		ROCK WALL
		CLEARING/GRUBBING LIMITS
		SAWCUT LINE
		SELECT CLEARING LIMITS
	X	HIGH VISIBILITY SILT FENCE
		WATTLE
		UTILITY REMOVAL
	O	TREE PROTECTION/SAFETY RAIL
		PEDESTRIAN RAILING
		REMOVAL AREA
		HMA PAVEMENT
		POROUS PAVEMENT
		DISPERSION STRIP
		CEMENT CONCRETE
		GRAVEL SHOULDER
		GRAVEL SHOULDER WITH INFILTRATION TRENCH
		GRAVEL PATH

SEE APPLICABLE DISCIPLINE FOR ADDITIONAL LEGEND

ABBREVIATIONS

ABBREVIATION	NAME OR PHRASE
AP	ANGLE POINT
APPROX.	APPROXIMATE
ASSY	ASSEMBLY
ASTM	AMERICAN SOCIETY FOR TESTING AND MATERIALS
BK.	BACK
BLDG	BUILDING
BOF	BOTTOM OF FOOTING
BOW	BOTTOM OF WALL
BRG	BEARING
BVCS	BEGIN VERTICAL CURVE ELEVATION
BVCE	BEGIN VERTICAL CURVE STATION
CB	CATCH BASIN
C.G.	CENTER OF GRAVITY
C.I.P	CAST IN PLACE
C	CENTERLINE
CLR.	CLEARANCE
CMP	CORRUGATED METAL PIPE
CO	CLEAN OUT
COMM	COMMUNICATION
CONC.	CONCRETE
CONST.	CONSTRUCTION
CONT.	CONTINUE OR CONTINUOUS
COR	CITY OF REDMOND
CPP	CORRUGATED PLASTIC PIPE
CPEP	CORRUGATED POLYETHYLENE PIPE
CSBC	CRUSHED SURFACING BASE COURSE
CSTC	CRUSHED SURFACING TOP COURSE
CTRL	CONTROL
DI	DUCTILE IRON
DIAM.	DIAMETER
DWG	DRAWING
DWY	DRIVEWAY
E	EAST
EA	EACH
ELEV. OR EL.	ELEVATION
EMBED.	EMBEDMENT
ESMT	EASEMENT
EVCE	END VERTICAL CURVE ELEVATION
EVCS	END VERTICAL CURVE STATION
EXIST.	EXISTING
EXP.	EXPANSION
FD	FOUND
FG	FINISH GRADE
FIG.	FIGURE
FL	FLOW LINE (ELEVATION) OR FLANGE
FOC	FACE OF CURB
FT	FOOT OR FEET
FTG.	FOOTING
GALV.	GALVANIZED
G.E. OR GR EL	GRATE ELEVATION
GIR.	GIRDER
GRVL	GRAVEL
HDPE	HIGH DENSITY POLYETHYLENE
HMA	HOT MIX ASPHALT
HORZ.	HORIZONTAL
HP	HIGH PRESSURE OR HIGH POINT
ID	INSIDE DIAMETER
IE	INVERT ELEVATION
JT.	JOINT
LBS.	POUNDS
LF	LINEAR FEET
LT	LEFT
LVC	LENGTH OF VERTICAL CURVE
MAX.	MAXIMUM
MH	MANHOLE
MHW	MEAN HIGH WATER
MHHW	MEAN HIGH HIGH WATER
MIC	MONUMENT IN CASE
MIN.	MINIMUM
MUTCD	MANUAL ON UNIFORM TRAFFIC CONTROL DEVICES
N	NORTH
NE	NORTHEAST
NO.	NUMBER
NW	NORTHWEST
O.C.	ON CENTER
O.D.	OUTSIDE DIAMETER

ABBREVIATION	NAME OR PHRASE
PAV'T	PAVEMENT
PC	POINT OF CURVATURE
PCC	POINT OF COMPOUND CURVE
PCMS	PORTABLE CHANGEABLE MESSAGE SIGN
P.E.	PLAIN END OR POLYETHYLENE
PI	POINT OF INTERSECTION
PP	POLYPROPYLENE
P	PROPERTY OR PLATE
PRC	POINT OF REVERSE CURVE
PROP.	PROPOSED
PSI	POUND PER SQUARE INCH
PT	POINT OF TANGENCY OR POINT
PVC	POLYVINYL CHLORIDE
PVI	POINT OF VERTICAL INTERSECTION
R	RADIUS
RCC II	REDMOND CENTRAL CONNECTOR PHASE II
REF.	REFERENCE
REINF.	REINFORCED
RGS	RIGID GALVANIZED STEEL
RJ	RESTRAINED JOINT
RT	RIGHT
R/W	RIGHT-OF-WAY
S	SOUTH
SD	STORM DRAIN
SDMH	STORM DRAIN MANHOLE
SE	SOUTHEAST
SHT	SHEET
SPA.	SPACE OR SPACING
SPEC.	SPECIFICATIONS
SS	SANITARY SEWER
SSMH	SANITARY SEWER MANHOLE
STA.	STATION
STD	STANDARD
STIRR.	STIRRUPS
SW	SOUTHWEST
SYMM.	SYMMETRICAL
TEL	TELEPHONE
TEMP.	TEMPORARY
TESC	TEMP. EROSION & SEDIMENT CONTROL
TOC	TOP OF CURB
TOW	TOP OF WALL
TYP.	TYPICAL
VERT.	VERTICAL
W	WEST
W/	WITH
WS	WATER SURFACE
WSDOT	WASHINGTON STATE DEPARTMENT OF TRANSPORTATION

GENERAL NOTES

1. CONTRACTOR SHALL COMPLY WITH ALL FEDERAL, STATE, OR LOCAL LAWS, ORDINANCES, AND REGULATIONS THAT AFFECT WORK UNDER THE CONTRACT. SEE SPECIFICATIONS FOR ADDITIONAL DETAILS.
2. AN APPROVED SET OF CONSTRUCTION PLANS AND SPECIFICATIONS FOR ALL WORK SHALL BE KEPT ON THE CONSTRUCTION SITE AT ALL TIMES. IN ADDITION, A COPY OF THE CURRENT CITY OF REDMOND STANDARD DETAILS AND SPECIFICATIONS SHALL ALSO BE AVAILABLE AT THE CONSTRUCTION SITE.
3. THE CONTRACTOR SHALL VERIFY ALL EXISTING DATA SHOWN IN THESE DOCUMENTS AND NOTIFY ENGINEER IMMEDIATELY OF ANY CONFLICTS WITH PROPOSED FEATURES PRIOR TO CONSTRUCTION.
4. KEEP OFF-SITE STREETS CLEAN AT ALL TIMES. FLUSHING STREETS SHALL NOT BE ALLOWED. STREETS SHALL BE SWEPT.
5. ADDITIONAL EROSION CONTROL MEASURES MAY BE REQUIRED BY THE CITY OF REDMOND CONSTRUCTION INSPECTOR DEPENDING ON SITE AND WEATHER CONDITIONS OR WHEN WORK IS STOPPED OR COMPLETED IN AN AREA.
6. ACCESS TO ADJACENT PROPERTIES SHALL BE MAINTAINED AT ALL TIMES UNLESS PRIOR ARRANGEMENTS HAVE BEEN MADE AND APPROVED BY THE CITY.

CONSTRUCTION SEQUENCE

SITE PREPARATION/TESC/DEMOLITION

1. ATTEND PRE-CONSTRUCTION MEETING WITH CITY OF REDMOND.
2. INSTALL PERIMETER PROTECTION (SECURITY FENCES, SILT FENCES, ETC.).
3. GRADE AND INSTALL CONSTRUCTION ENTRANCE.
4. CLEAR AND GRUB SITE IN ACCORDANCE WITH THE PROJECT SPECIFICATIONS.
5. MAINTAIN TESC MEASURES IN ACCORDANCE WITH THE PROJECT SPECIFICATIONS, THE CITY OF REDMOND STANDARDS, AND THE MANUFACTURER'S RECOMMENDATIONS.
6. RELOCATE/ADJUST TESC MEASURES, OR INSTALL NEW MEASURES, SO THAT AS THE SITE CONDITIONS CHANGE THE TESC IS ALWAYS IN ACCORDANCE WITH THE CITY TESC MINIMUM REQUIREMENTS.

GRADING

1. GRADE SITE PER PLAN.
2. PLACE FILL. PRE-LOADING REQUIRED, SEE SPECIFICATIONS FOR DETAILS.

BRIDGE

1. REPAIR BRIDGES

UTILITIES

1. INSTALL FISH PASSABLE CULVERT.
2. INSTALL UNDERGROUND UTILITY SYSTEMS.

CURB, GUTTER, SIDEWALK AND HARDSCAPE

1. CONSTRUCT CURB AND GUTTER.
2. CONSTRUCT SIDEWALK, RAMPS AND DRIVEWAY ENTRANCE.
3. CONSTRUCT HARDSCAPE.

PAVING

1. CONSTRUCT AND PAVE TRAIL AND ROADWAY
2. INSTALL SIGNING AND PAVEMENT MARKING

LANDSCAPE

1. PLANTING AND PROPERTY RESTORATION

CALL BEFORE YOU DIG 1-800-424-5555

CityofRedmond WASHINGTON

CITY OF REDMOND
PUBLIC WORKS DEPARTMENT
15670 NE 85TH STREET - REDMOND, WA 98073-9710

Redmond Central Connector
Phase II
City Project No. 20021314
Federal Aid No. CM-1065(011)

otak
Hammel Global Partner
11241 Willows Road NE
Suite 200
Redmond, Washington 98052
Phone: (425) 822-4446
FAX: (425) 827-9577
www.otak.com

DESIGN ENGR.	DRAWN	CHECKED
TP/SW	AK/EW	NV/DS

NO.	REVISION COMMENTS	BY	REVIEW	DATE

NICO M. VANDERGRIFT — STATE OF WASHINGTON — 30792 — PROFESSIONAL ENGINEER
1/14/16

LEGEND, ABBREVIATIONS AND GENERAL NOTES

January 2016

PROJECT NO. OTAK 32246
SHEET: 2 OF: 111
DRAWING NO. 1.02

Plotted: Jan 14, 2016 - 9:25am touta K:\project\32200\32246\Dwg\1.02.dwg Layout Name: 1.02

XREF LIST
Ltscale: 1
Resolved
ttlblk
S246Y220
S246B190

SURVEY MAPPING NOTES

1. HORIZONTAL DATUM: PROJECT DATUM DERIVED FROM WASHINGTON COORDINATE SYSTEM NORTH ZONE (NAD 83/91) NOTE: PROJECT CONTROL WAS ESTABLISHED BY CONSTRAINING TO SPC COORDINATES AT WSDOT MONUMENT ID #'s 6763 & 2354.
2. VERTICAL DATUM: N.A.V.D. 88 PROJECT BENCHMARK CITY OF REDMOND BM # 9148 ELEV. = 52.56'.
3. HORIZONTAL CONTROL WAS ESTABLISHED BY A COMBINATION OF FIELD TRAVERSE AND RTK GPS WITH AN ACCURACY THAT MEETS OR EXCEEDS WAC 332-130-090. VERTICAL CONTROL WAS ESTABLISHED BY DIFFERENTIAL LEVELS.
4. THE COORDINATES AND ELEVATIONS OF CONTROL POINTS SHALL BE VERIFIED BY THE CONTRACTOR'S SURVEYOR PRIOR TO BEGINNING CONSTRUCTION. DISTANCES, STATIONING & COORDINATES ASSOCIATED WITH THIS DRAWING ARE GROUND.
5. COORDINATES SHOWN ON PLANS ARE PROJECT COORDINATES TO PROJECT BACK TO STATE PLANE COORDINATES, SCALE ALL COORDINATES ABOUT CITY OF REDMOND POINT GPS90-4E3 (N 248820.775, E 1323349.181) BY A COMBINED SCALE FACTOR (CSF) OF 0.9999734955 AS SHOWN ON THE KPG PLANS FOR RCC PHASE 1.
6. TOPOGRAPHIC SURVEY AND CONTROL WAS PERFORMED BY OTAK INC. IN MAY-JUNE OF 2013.

SURVEY CONTROL

POINT #	NORTHING	EASTING	ELEVATION	DESCRIPTION
100	253954.22	1316527.74	38.33	TACK W/ OTAK WASHER
101	253453.93	1316864.57	42.68	PK NAIL W/ OTAK WASHER
102	252830.49	1317280.00	45.80	REBAR W/ OTAK CONTROL CAP
105	252071.55	1317762.91	46.31	REBAR W/ OTAK CONTROL CAP
108	251621.35	1318065.40	45.19	TACK W/ OTAK WASHER
109	251325.52	1318259.74	43.32	REBAR W/ OTAK CONTROL CAP
110	251038.04	1318448.78	43.67	REBAR W/ OTAK CONTROL CAP
114	250290.48	1318940.62	49.18	REBAR W/ OTAK CONTROL CAP
115	250636.34	1318712.49	45.99	REBAR W/ OTAK CONTROL CAP
116	249867.28	1319217.88	51.64	REBAR W/ OTAK CONTROL CAP
117	249321.36	1319616.18	55.21	REBAR W/ OTAK CONTROL CAP
118	249563.51	1319419.02	54.06	REBAR W/ OTAK CONTROL CAP
119	249119.77	1319913.65	54.48	REBAR W/ OTAK CONTROL CAP
122	249007.32	1320185.24	54.84	REBAR W/ OTAK CONTROL CAP
123	248915.49	1320423.82	54.20	REBAR W/ OTAK CONTROL CAP

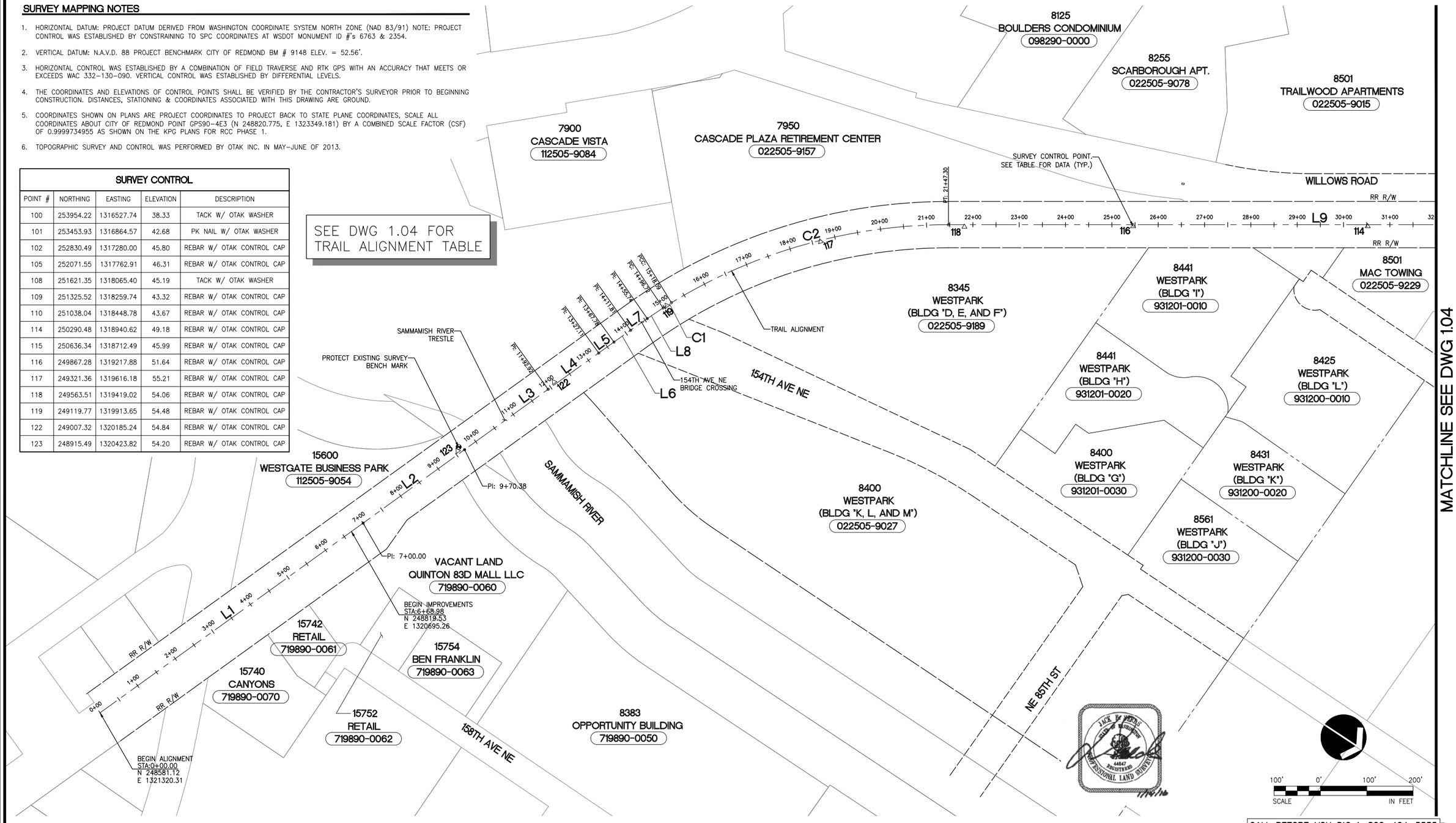

CALL BEFORE YOU DIG 1-800-424-5555

CityofRedmond WASHINGTON

CITY OF REDMOND
PUBLIC WORKS DEPARTMENT
15670 NE 85TH STREET - REDMOND, WA 98073-9710

Redmond Central Connector
Phase II
City Project No. 20021314
Federal Aid No. CM-1065(011)

otak
Hammi/Global Partner
11241 Willows Road NE
Suite 200
Redmond, Washington 98052
Phone: (425) 822-4446
FAX: (425) 827-9577
www.otak.com

DESIGN ENGR.	DRAWN	CHECKED
TP/SW	AK/EW	NV/DS

NO.	REVISION COMMENTS	BY	REVIEW	DATE

1/14/16

CONSTRUCTION ALIGNMENT AND SURVEY CONTROL PLAN

January 2016

PROJECT NO. OTAK 32246
SHEET: 3 OF: 111
DRAWING NO. 1.03

Plotted: Jan 14, 2016 - 9:26am touta K:\project\32200\32246\Dwg\1.03-1.04.dwg Layout Name: 1.03

XREF LIST
Ltscale: 1
Resolved
ttlblk
S246Y220
S246B190

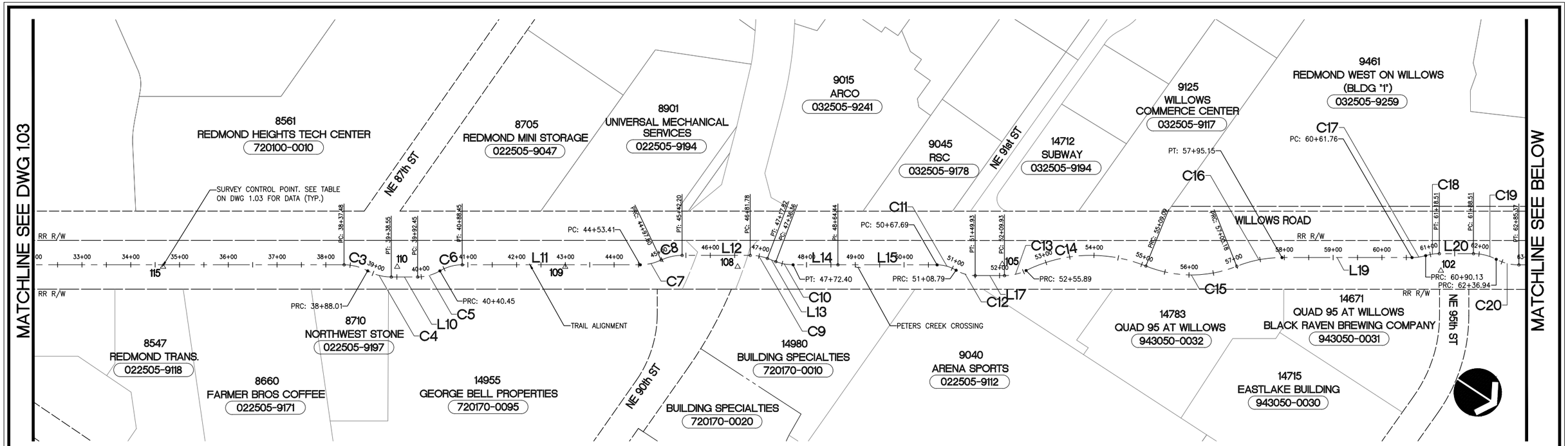

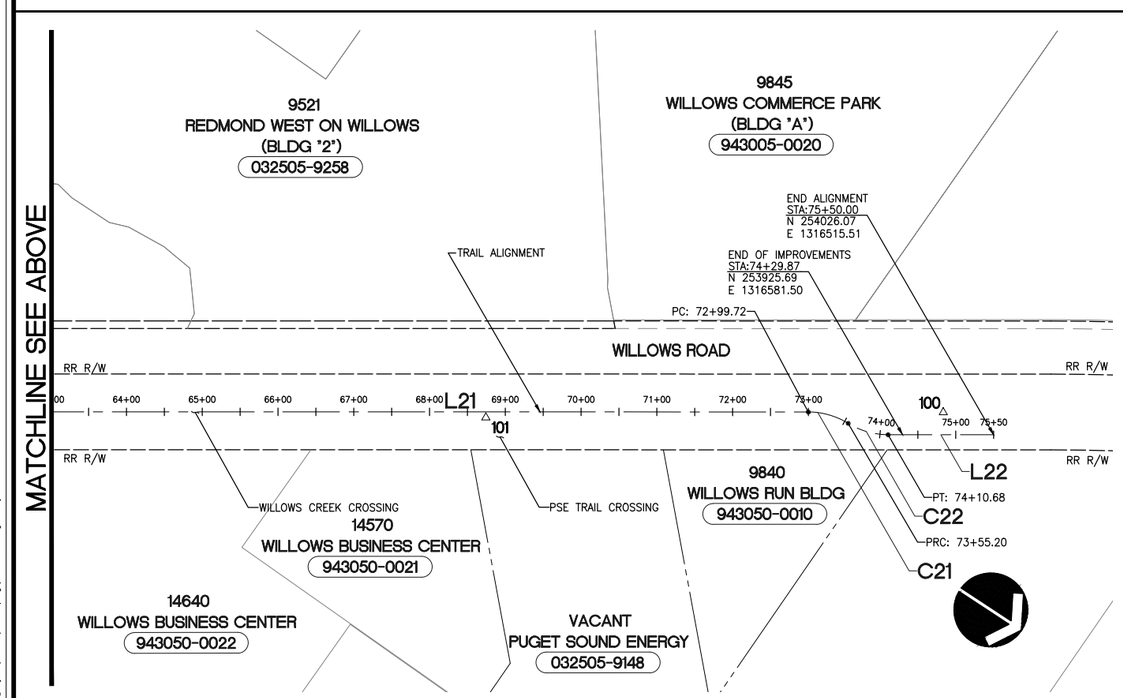

TRAIL ALIGNMENT

NUMBER	STATION	LENGTH	RADIUS	BEARING	DELTA
L1	0+00.00	700.00'		N69°07'17"W	
L2	7+00.00	270.38'		N69°14'33"W	
L3	9+70.38	222.54'		N69°10'59"W	
L4	11+92.92	134.19'		N68°57'18"W	
L5	13+27.11	40.67'		N69°03'33"W	
L6	13+67.78	44.03'		N68°43'00"W	
L7	14+11.81	43.93'		N68°09'48"W	
L8	14+55.74	40.98'		N67°06'36"W	
C1	14+96.72	21.37'	525.00'	N65°56'37"W	2°19'56"
C2	15+18.09	629.22'	1146.28'	N49°03'08"W	31°27'03"
L9	21+47.30	1690.17'		N33°19'36"W	
C3	38+37.48	50.54'	100.00'	N18°50'57"W	28°57'18"
C4	38+88.01	50.54'	100.00'	N18°50'57"W	28°57'18"
L10	39+38.55	53.90'		N33°19'36"W	
C5	39+92.45	48.00'	90.00'	N48°36'21"W	30°33'30"
C6	40+40.45	48.00'	90.00'	N48°36'21"W	30°33'30"
L11	40+88.45	364.96'		N33°19'36"W	
C7	44+53.41	44.39'	100.00'	N46°02'38"W	25°26'04"
C8	44+97.80	44.39'	100.00'	N46°02'38"W	25°26'04"
L12	45+42.20	139.59'		N33°19'36"W	
C9	46+81.78	36.04'	100.00'	N23°00'08"W	20°38'56"
L13	47+17.82	18.54'		N12°40'41"W	
C10	47+36.36	36.04'	100.00'	N23°00'08"W	20°38'56"
L14	47+72.40	92.04'		N33°19'36"W	
L15	48+64.44	203.25'		N33°16'56"W	

TRAIL ALIGNMENT

NUMBER	STATION	LENGTH	RADIUS	BEARING	DELTA
C11	50+67.69	41.10'	75.00'	N17°35'05"W	31°23'41"
C12	51+08.79	41.14'	75.00'	N17°36'13"W	31°25'57"
L17	51+49.93	60.00'		N33°19'11"W	
C13	52+09.93	45.96'	100.00'	N46°29'07"W	26°19'51"
C14	52+55.89	253.20'	300.00'	N35°28'17"W	48°21'31"
C15	55+09.09	191.09'	250.00'	N33°11'21"W	43°47'38"
C16	57+00.18	94.97'	250.00'	N44°12'11"W	21°45'58"
L19	57+95.15	266.60'		N33°19'11"W	
C17	60+61.76	28.38'	100.00'	N41°27'00"W	16°15'37"
C18	60+90.13	28.38'	100.00'	N41°27'00"W	16°15'37"
L20	61+18.51	70.00'		N33°19'11"W	
C19	61+88.51	48.43'	100.00'	N19°26'44"W	27°44'55"
C20	62+36.94	48.43'	100.00'	N19°26'44"W	27°44'55"
L21	62+85.37	1014.34'		N33°19'11"W	
C21	72+99.72	55.48'	100.00'	N17°25'32"W	31°47'18"
C22	73+55.20	55.48'	100.00'	N17°25'32"W	31°47'18"
L22	74+10.68	139.32'		N33°19'11"W	

SEE DWG 1.03 FOR SURVEY NOTES AND CONTROL POINTS

JACK E. WEBB STATE OF WASHINGTON 44647 REGISTERED PROFESSIONAL LAND SURVEYOR 1/14/16

100' 0' 100' 200'
SCALE IN FEET

CALL BEFORE YOU DIG 1-800-424-5555

CityofRedmond WASHINGTON

CITY OF REDMOND
PUBLIC WORKS DEPARTMENT
15670 NE 85TH STREET - REDMOND, WA 98073-9710

Redmond Central Connector
Phase II
City Project No. 20021314
Federal Aid No. CM-1065(011)

otak
HammGlobal Partner
11241 Willows Road NE
Suite 200
Redmond, Washington 98052
Phone: (425) 822-4446
FAX: (425) 827-9577
www.otak.com

DESIGN ENGR.	DRAWN	CHECKED
TP/SW	AK/EW	NV/DS

NO.	REVISION COMMENTS	BY	REVIEW	DATE

STATE OF WASHINGTON NICO H. VANDERHOEVEN 30792 REGISTERED PROFESSIONAL ENGINEER 1/14/16

CONSTRUCTION ALIGNMENT AND SURVEY CONTROL PLAN

January 2016

PROJECT NO. OTAK 32246
SHEET: 4 OF: 111
DRAWING NO. 1.04

Plotted: Jan 14, 2016 - 9:26am tauta K:\project\32200\32246\Dwg\1.03-1.04.dwg Layout Name: 1.04

XREF LIST
Ltscale: 1
Resolved
TTLBLK
S246Y220
C246R500
C246R270
S246B190
C246N035
C246T460

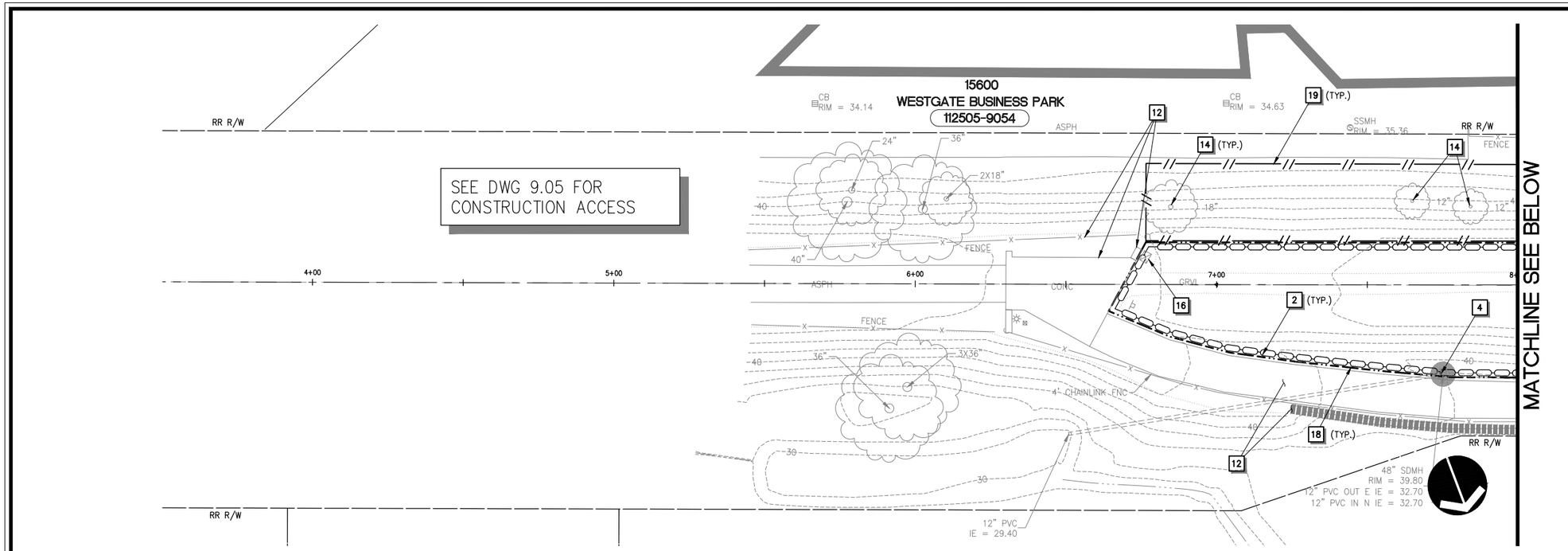

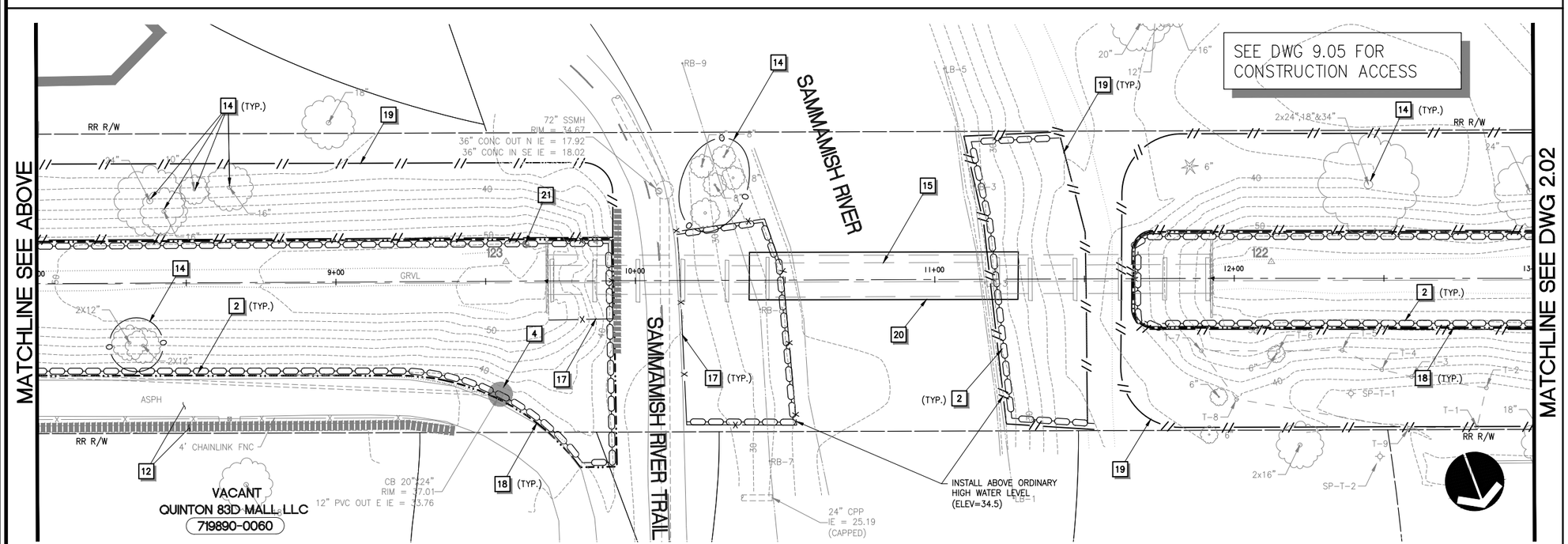

TESC AND DEMOLITION NOTES

1. INSTALL STABILIZED CONSTRUCTION ENTRANCE PER COR STD DETAIL 503.
2. INSTALL WATTLE PER WSDOT STD PLAN 1-30.30-01.
3. NOT USED.
4. INSTALL STORM DRAIN INLET PROTECTION PER WSDOT STD PLAN I-40.20-00.
5. SAWCUT AND REMOVE PAVEMENT 24" MIN. FROM EDGE OF EXISTING ASPHALT CONCRETE PAVEMENT UNLESS NOTED OTHERWISE. REPLACE EXISTING PAVEMENT TO LIMITS SHOWN PER TYPICAL ROADWAY RECONSTRUCTION SECTION ON DWG 3.17.
6. REMOVE EXISTING CEMENT CONCRETE CURB, GUTTER AND/OR SIDEWALK AS REQUIRED FOR INSTALLATION OF IMPROVEMENTS. CURB, GUTTER AND/OR SIDEWALK SHALL BE REMOVED TO THE NEAREST JOINT BEYOND THE IMPROVEMENTS.
7. REMOVE EXISTING ASPHALT CONCRETE PAVEMENT OR CONCRETE DRIVEWAY, LIMITS PER PLAN. ACCESS SHALL BE MAINTAINED AT ALL TIMES.
8. POWER SUPPLY LINE TO EXISTING BUSINESS SIGN IS BELIEVE TO BE UNDER PAVEMENT, CONTRACTOR SHALL VERIFY AND COORDINATE WITH PROPERTY OWNER PRIOR TO WORK.
9. REMOVE EXISTING TREE(S)/SHRUB(S).
10. REMOVE PORTION OF EXISTING STORM DRAIN, LIMITS PER PLAN.
11. REMOVE EXISTING FENCE, RAILING, BARRIER, OR TIES LIMITS PER PLAN.
12. EXISTING LANDSCAPE FEATURES OR STRUCTURE TO REMAIN, PROTECT DURING CONSTRUCTION.
13. REMOVE EXISTING FEATURE AND PROPERLY STORE AND PROTECT FROM DAMAGES FOR LATER INSTALLATION.
14. EXISTING TREE(S) TO REMAIN, PROTECT DURING CONSTRUCTION.
15. EXISTING BRIDGE TO REMAIN, SEE BRIDGE PLANS FOR IMPROVEMENTS.
16. EXISTING UTILITY TO REMAIN, PROTECT DURING CONSTRUCTION.
17. INSTALL TEMPORARY SECURITY FENCE (MIN. 6' HIGH CHAIN LINK FENCE) AROUND WORK ZONE.
18. CLEARING AND GRUBBING LIMITS. CLEARING LIMITS SHALL BE FLAGGED AND MAINTAINED THROUGHOUT CONSTRUCTION.
19. SELECT CLEARING OF INVASIVE SPECIES, LIMITS AS DIRECTED BY CITY INSPECTOR.
20. PROVIDE DEBRIS CATCHMENT FOR BRIDGE WORK. SEE SPECIFICATIONS FOR REQUIREMENTS.
21. EXISTING SURVEY BENCHMARK TO BE REPLACED, SEE SPECIFICATIONS FOR REQUIREMENTS.

GENERAL TESC NOTES

1. CATCH BASIN INLET PROTECTION SHALL BE PROVIDED AND MAINTAINED AT ALL EXISTING AND PROPOSED CATCH BASIN PRIOR TO AND FOR THE DURATION OF CONSTRUCTION OPERATIONS. PROTECTION MEASURES FOR PROPOSED CATCH BASINS ARE NOT SHOWN ON TESC PLAN FOR CLARIFICATION.
2. LOCATION OF TESC MEASURES SHOWN ARE APPROXIMATE AND SHALL BE FIELD LOCATED TO ACCOMMODATE SITE CONDITIONS AND WORK SCHEDULE.
3. CONTRACTOR SHALL INSTALL HIGH VISIBILITY FENCE PER WSDOT STD PLAN I-10.10-01 AS DIRECTED BY CITY INSPECTOR.
4. THE CONTRACTOR SHALL NOT REMOVE ANY TREES WITHIN THE WORKING LIMITS OF THE PROJECT NOT IDENTIFIED FOR REMOVAL WITHOUT APPROVAL FROM THE ENGINEER.
5. SEE SIGNING AND STRIPING PLANS FOR SIGN REMOVAL AND RELOCATION.

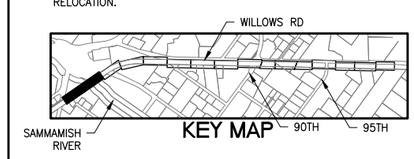

HORZ. SCALE 20' 0' 20' 40' IN FEET

CALL BEFORE YOU DIG 1-800-424-5555

CityofRedmond WASHINGTON

CITY OF REDMOND
PUBLIC WORKS DEPARTMENT
15670 NE 85TH STREET - REDMOND, WA 98073-9710

Redmond Central Connector
Phase II
City Project No. 20021314
Federal Aid No. CM-1065(011)

otak
HaymiGlobal Partner
11241 Willows Road NE
Suite 200
Redmond, Washington 98052
Phone: (425) 822-4446
FAX: (425) 827-9577
www.otak.com

DESIGN ENGR.	DRAWN	CHECKED
TP/SW	AK/EW	NV/DS

NO.	REVISION COMMENTS	BY	REVIEW	DATE

NICO M. VANDERBERGEN, STATE OF WASHINGTON, 30792, REGISTERED PROFESSIONAL ENGINEER
1/14/16

TESC AND DEMOLITION PLAN

January 2016

PROJECT NO. OTAK 32246
SHEET: 5 OF: 111
DRAWING NO. 2.01

Plotted: Jan 14, 2016 - 9:27am toula K:\project\32200\32246\Dwg\2.01-2.08.dwg Layout Name: 2.01

XREF LIST
Ltscale: 1
Resolved
TTLBLK
S246Y220
C246R500
C246R270
S246B190
C246N035
C246T460

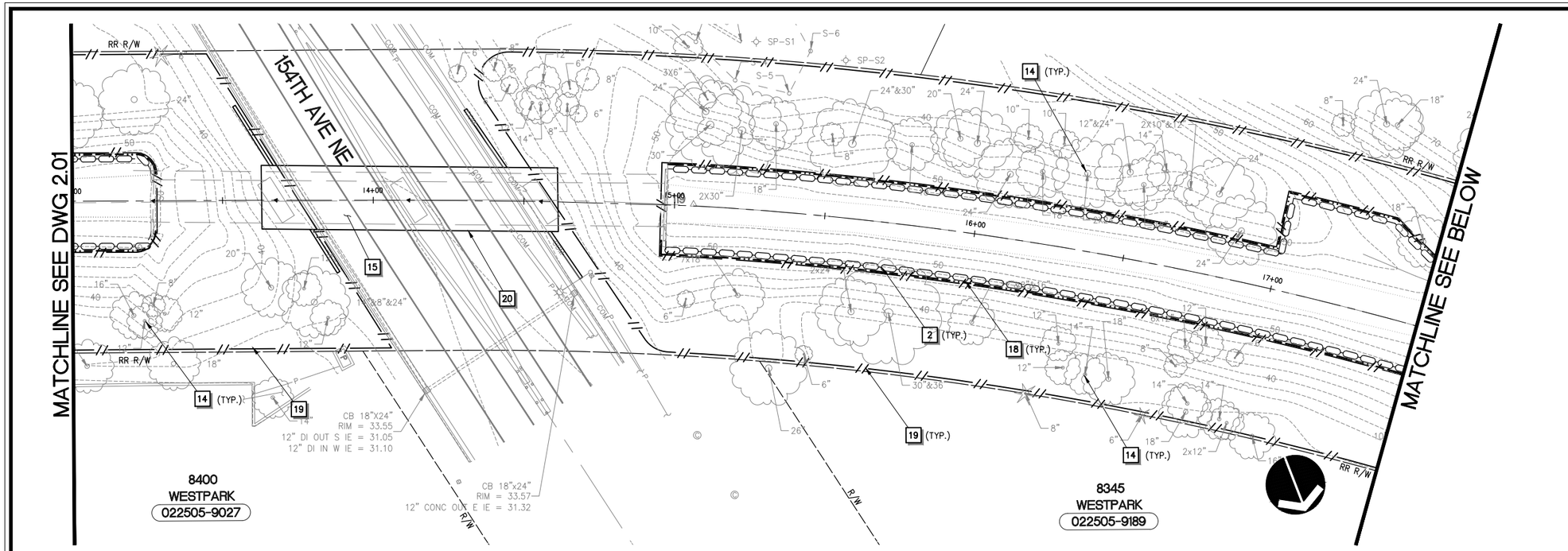

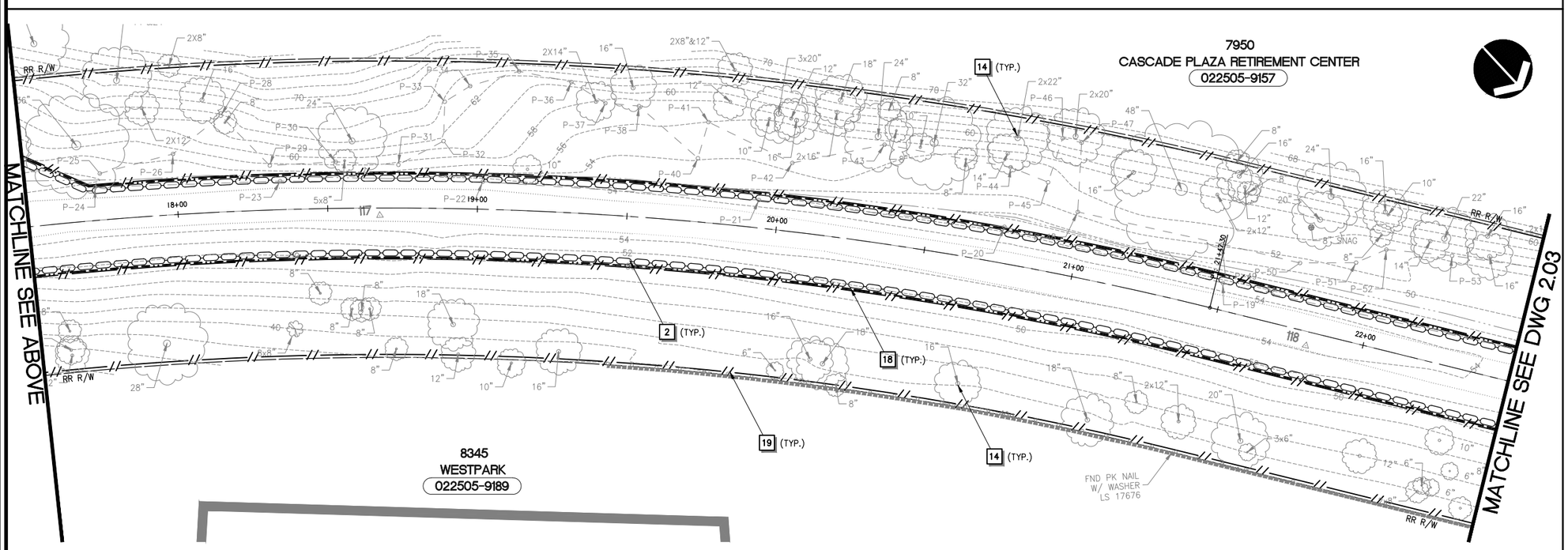

TESC AND DEMOLITION NOTES

1. INSTALL STABILIZED CONSTRUCTION ENTRANCE PER COR STD DETAIL 503.
2. INSTALL WATTLE PER WSDOT STD PLAN 1-30.30-01.
3. NOT USED.
4. INSTALL STORM DRAIN INLET PROTECTION PER WSDOT STD PLAN I-40.20-00.
5. SAWCUT AND REMOVE PAVEMENT 24" MIN. FROM EDGE OF EXISTING ASPHALT CONCRETE PAVEMENT UNLESS NOTED OTHERWISE. REPLACE EXISTING PAVEMENT TO LIMITS SHOWN PER TYPICAL ROADWAY RECONSTRUCTION SECTION ON DWG 3.17.
6. REMOVE EXISTING CEMENT CONCRETE CURB, GUTTER AND/OR SIDEWALK AS REQUIRED FOR INSTALLATION OF IMPROVEMENTS. CURB, GUTTER AND/OR SIDEWALK SHALL BE REMOVED TO THE NEAREST JOINT BEYOND THE IMPROVEMENTS.
7. REMOVE EXISTING ASPHALT CONCRETE PAVEMENT OR CONCRETE DRIVEWAY, LIMITS PER PLAN. ACCESS SHALL BE MAINTAINED AT ALL TIMES.
8. POWER SUPPLY LINE TO EXISTING BUSINESS SIGN IS BELIEVE TO BE UNDER PAVEMENT, CONTRACTOR SHALL VERIFY AND COORDINATE WITH PROPERTY OWNER PRIOR TO WORK.
9. REMOVE EXISTING TREE(S)/SHRUB(S).
10. REMOVE PORTION OF EXISTING STORM DRAIN, LIMITS PER PLAN.
11. REMOVE EXISTING FENCE, RAILING, BARRIER, OR TIES LIMITS PER PLAN.
12. EXISTING LANDSCAPE FEATURES OR STRUCTURE TO REMAIN, PROTECT DURING CONSTRUCTION.
13. REMOVE EXISTING FEATURE AND PROPERLY STORE AND PROTECT FROM DAMAGES FOR LATER INSTALLATION.
14. EXISTING TREE(S) TO REMAIN, PROTECT DURING CONSTRUCTION.
15. EXISTING BRIDGE TO REMAIN, SEE BRIDGE PLANS FOR IMPROVEMENTS.
16. EXISTING UTILITY TO REMAIN, PROTECT DURING CONSTRUCTION.
17. INSTALL TEMPORARY SECURITY FENCE (MIN. 6' HIGH CHAIN LINK FENCE) AROUND WORK ZONE.
18. CLEARING AND GRUBBING LIMITS. CLEARING LIMITS SHALL BE FLAGGED AND MAINTAINED THROUGHOUT CONSTRUCTION.
19. SELECT CLEARING OF INVASIVE SPECIES, LIMITS AS DIRECTED BY CITY INSPECTOR.
20. PROVIDE DEBRIS CATCHMENT FOR BRIDGE WORK. SEE SPECIFICATIONS FOR REQUIREMENTS.
21. EXISTING SURVEY BENCHMARK TO BE REPLACED, SEE SPECIFICATIONS FOR REQUIREMENTS.

GENERAL TESC NOTES

1. CATCH BASIN INLET PROTECTION SHALL BE PROVIDED AND MAINTAINED AT ALL EXISTING AND PROPOSED CATCH BASIN PRIOR TO AND FOR THE DURATION OF CONSTRUCTION OPERATIONS. PROTECTION MEASURES FOR PROPOSED CATCH BASINS ARE NOT SHOWN ON TESC PLAN FOR CLARIFICATION.
2. LOCATION OF TESC MEASURES SHOWN ARE APPROXIMATE AND SHALL BE FIELD LOCATED TO ACCOMMODATE SITE CONDITIONS AND WORK SCHEDULE.
3. CONTRACTOR SHALL INSTALL HIGH VISIBILITY FENCE PER WSDOT STD PLAN I-10.10-01 AS DIRECTED BY CITY INSPECTOR.
4. THE CONTRACTOR SHALL NOT REMOVE ANY TREES WITHIN THE WORKING LIMITS OF THE PROJECT NOT IDENTIFIED FOR REMOVAL WITHOUT APPROVAL FROM THE ENGINEER.
5. SEE SIGNING AND STRIPING PLANS FOR SIGN REMOVAL AND RELOCATION.

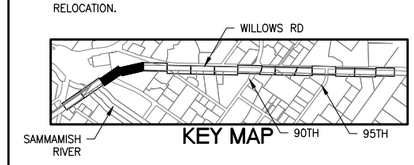

HORZ. SCALE 20' 0' 20' 40' IN FEET

CALL BEFORE YOU DIG 1-800-424-5555

City of Redmond WASHINGTON

CITY OF REDMOND
PUBLIC WORKS DEPARTMENT
15670 NE 85TH STREET - REDMOND, WA 98073-9710

Redmond Central Connector
Phase II
City Project No. 20021314
Federal Aid No. CM-1065(011)

otak
Hammi Global Partner
11241 Willows Road NE
Suite 200
Redmond, Washington 98052
Phone: (425) 822-4446
FAX: (425) 827-9577
www.otak.com

DESIGN ENGR.	DRAWN	CHECKED
TP/SW	AK/EW	NV/DS

NO.	REVISION COMMENTS	BY	REVIEW	DATE

NICO M. VANDERGRAFT
STATE OF WASHINGTON
30793
REGISTERED PROFESSIONAL ENGINEER
1/14/16

TESC AND DEMOLITION PLAN

January 2016

PROJECT NO. OTAK 32246
SHEET: 6 OF: 111
DRAWING NO. 2.02

Plotted: Jan 14, 2016 - 9:28am touta K:\project\32200\32246\Dwg\2.01-2.08.dwg Layout Name: 2.02

XREF LIST
Ltscale: 1
Resolved
TTLBLK
S246Y220
C246R500
C246R270
S246B190
C246N035
C246T460

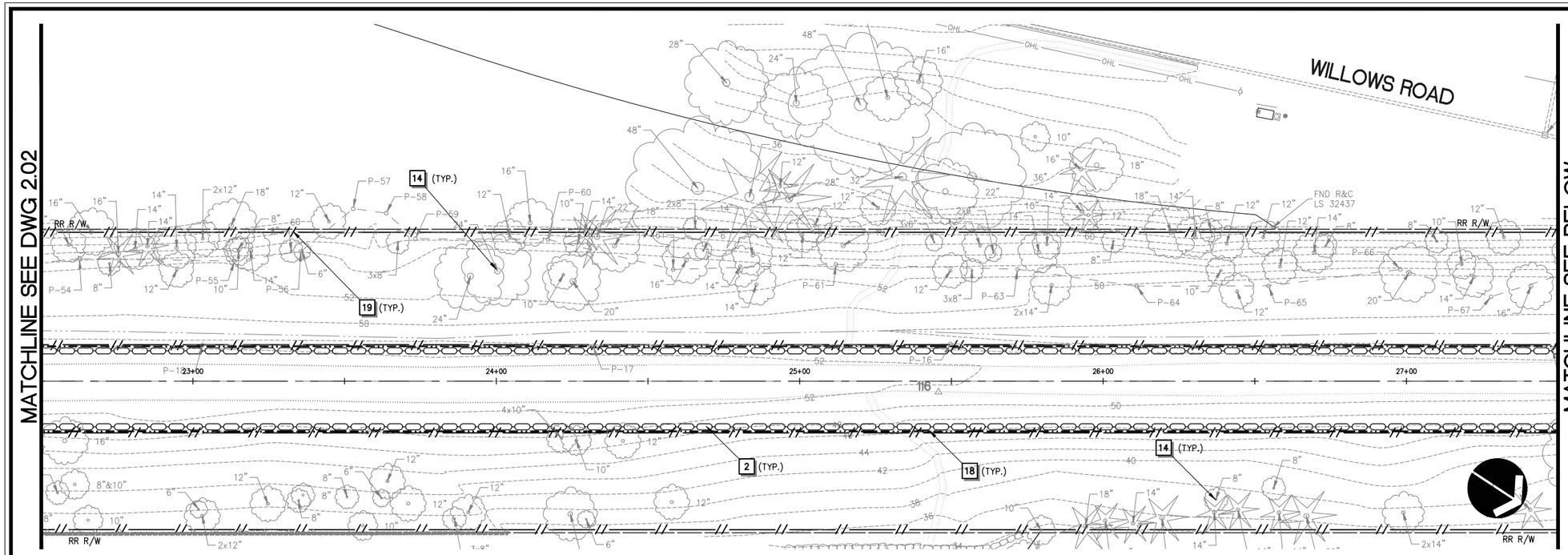

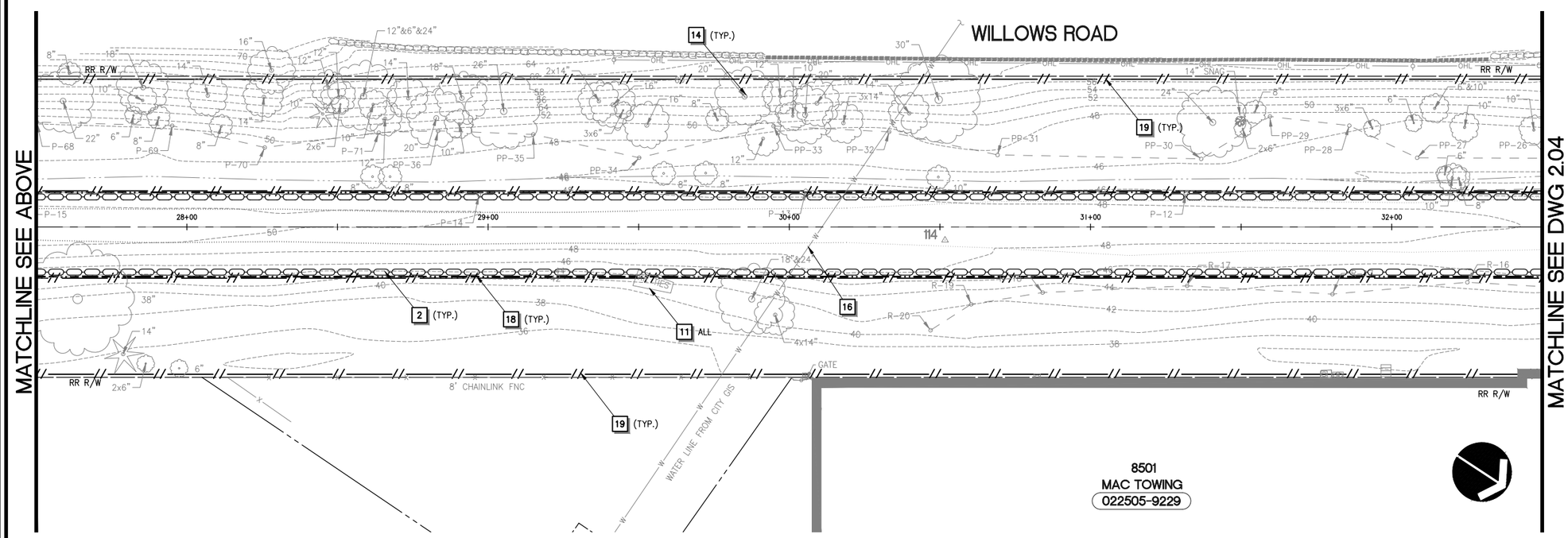

TESC AND DEMOLITION NOTES

1. INSTALL STABILIZED CONSTRUCTION ENTRANCE PER COR STD DETAIL 503.
2. INSTALL WATTLE PER WSDOT STD PLAN 1-30.30-01.
3. NOT USED.
4. INSTALL STORM DRAIN INLET PROTECTION PER WSDOT STD PLAN I-40.20-00.
5. SAWCUT AND REMOVE PAVEMENT 24" MIN. FROM EDGE OF EXISTING ASPHALT CONCRETE PAVEMENT UNLESS NOTED OTHERWISE. REPLACE EXISTING PAVEMENT TO LIMITS SHOWN PER TYPICAL ROADWAY RECONSTRUCTION SECTION ON DWG 3.17.
6. REMOVE EXISTING CEMENT CONCRETE CURB, GUTTER AND/OR SIDEWALK AS REQUIRED FOR INSTALLATION OF IMPROVEMENTS. CURB, GUTTER AND/OR SIDEWALK SHALL BE REMOVED TO THE NEAREST JOINT BEYOND THE IMPROVEMENTS.
7. REMOVE EXISTING ASPHALT CONCRETE PAVEMENT OR CONCRETE DRIVEWAY, LIMITS PER PLAN. ACCESS SHALL BE MAINTAINED AT ALL TIMES.
8. POWER SUPPLY LINE TO EXISTING BUSINESS SIGN IS BELIEVE TO BE UNDER PAVEMENT, CONTRACTOR SHALL VERIFY AND COORDINATE WITH PROPERTY OWNER PRIOR TO WORK.
9. REMOVE EXISTING TREE(S)/SHRUB(S).
10. REMOVE PORTION OF EXISTING STORM DRAIN, LIMITS PER PLAN.
11. REMOVE EXISTING FENCE, RAILING, BARRIER, OR TIES LIMITS PER PLAN.
12. EXISTING LANDSCAPE FEATURES OR STRUCTURE TO REMAIN, PROTECT DURING CONSTRUCTION.
13. REMOVE EXISTING FEATURE AND PROPERLY STORE AND PROTECT FROM DAMAGES FOR LATER INSTALLATION.
14. EXISTING TREE(S) TO REMAIN, PROTECT DURING CONSTRUCTION.
15. EXISTING BRIDGE TO REMAIN, SEE BRIDGE PLANS FOR IMPROVEMENTS.
16. EXISTING UTILITY TO REMAIN, PROTECT DURING CONSTRUCTION.
17. INSTALL TEMPORARY SECURITY FENCE (MIN. 6' HIGH CHAIN LINK FENCE) AROUND WORK ZONE.
18. CLEARING AND GRUBBING LIMITS. CLEARING LIMITS SHALL BE FLAGGED AND MAINTAINED THROUGHOUT CONSTRUCTION.
19. SELECT CLEARING OF INVASIVE SPECIES, LIMITS AS DIRECTED BY CITY INSPECTOR.
20. PROVIDE DEBRIS CATCHMENT FOR BRIDGE WORK. SEE SPECIFICATIONS FOR REQUIREMENTS.
21. EXISTING SURVEY BENCHMARK TO BE REPLACED, SEE SPECIFICATIONS FOR REQUIREMENTS.

GENERAL TESC NOTES

1. CATCH BASIN INLET PROTECTION SHALL BE PROVIDED AND MAINTAINED AT ALL EXISTING AND PROPOSED CATCH BASIN PRIOR TO AND FOR THE DURATION OF CONSTRUCTION OPERATIONS. PROTECTION MEASURES FOR PROPOSED CATCH BASINS ARE NOT SHOWN ON TESC PLAN FOR CLARIFICATION.
2. LOCATION OF TESC MEASURES SHOWN ARE APPROXIMATE AND SHALL BE FIELD LOCATED TO ACCOMMODATE SITE CONDITIONS AND WORK SCHEDULE.
3. CONTRACTOR SHALL INSTALL HIGH VISIBILITY FENCE PER WSDOT STD PLAN I-10.10-01 AS DIRECTED BY CITY INSPECTOR.
4. THE CONTRACTOR SHALL NOT REMOVE ANY TREES WITHIN THE WORKING LIMITS OF THE PROJECT NOT IDENTIFIED FOR REMOVAL WITHOUT APPROVAL FROM THE ENGINEER.
5. SEE SIGNING AND STRIPING PLANS FOR SIGN REMOVAL AND RELOCATION.

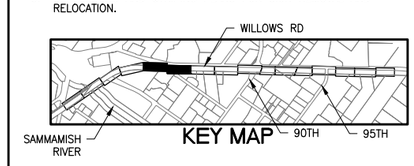

HORZ. SCALE 20' 0' 20' 40' IN FEET

CALL BEFORE YOU DIG 1-800-424-5555

City of Redmond WASHINGTON

CITY OF REDMOND
PUBLIC WORKS DEPARTMENT
15670 NE 85TH STREET - REDMOND, WA 98073-9710

Redmond Central Connector
Phase II
City Project No. 20021314
Federal Aid No. CM-1065(011)

otak
Hammi Global Partner
11241 Willows Road NE
Suite 200
Redmond, Washington 98052
Phone: (425) 822-4446
FAX: (425) 827-9577
www.otak.com

DESIGN ENGR.	DRAWN	CHECKED
TP/SW	AK/EW	NV/DS

NO.	REVISION COMMENTS	BY	REVIEW	DATE

NICO M. VANDERGRAFT, STATE OF WASHINGTON, 30793, REGISTERED PROFESSIONAL ENGINEER
1/14/16

TESC AND DEMOLITION PLAN

January 2016

PROJECT NO. OTAK 32246
SHEET: 7 OF: 111
DRAWING NO. 2.03

Plotted: Jan 14, 2016 - 9:28am touta K:\project\32200\32246\Dwg\2.01-2.08.dwg Layout Name: 2.03

XREF LIST
Ltscale: 1
Resolved
TTLBLK
S246Y220
C246R500
C246R270
S246B190
C246N035
C246T460

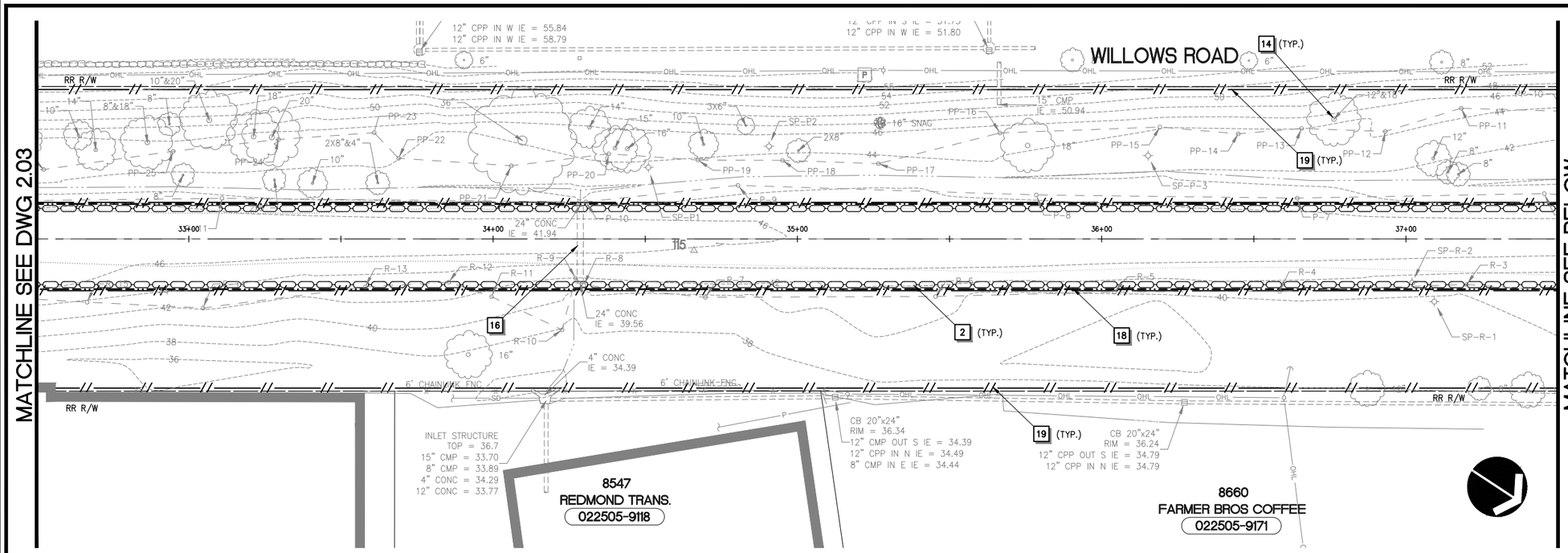

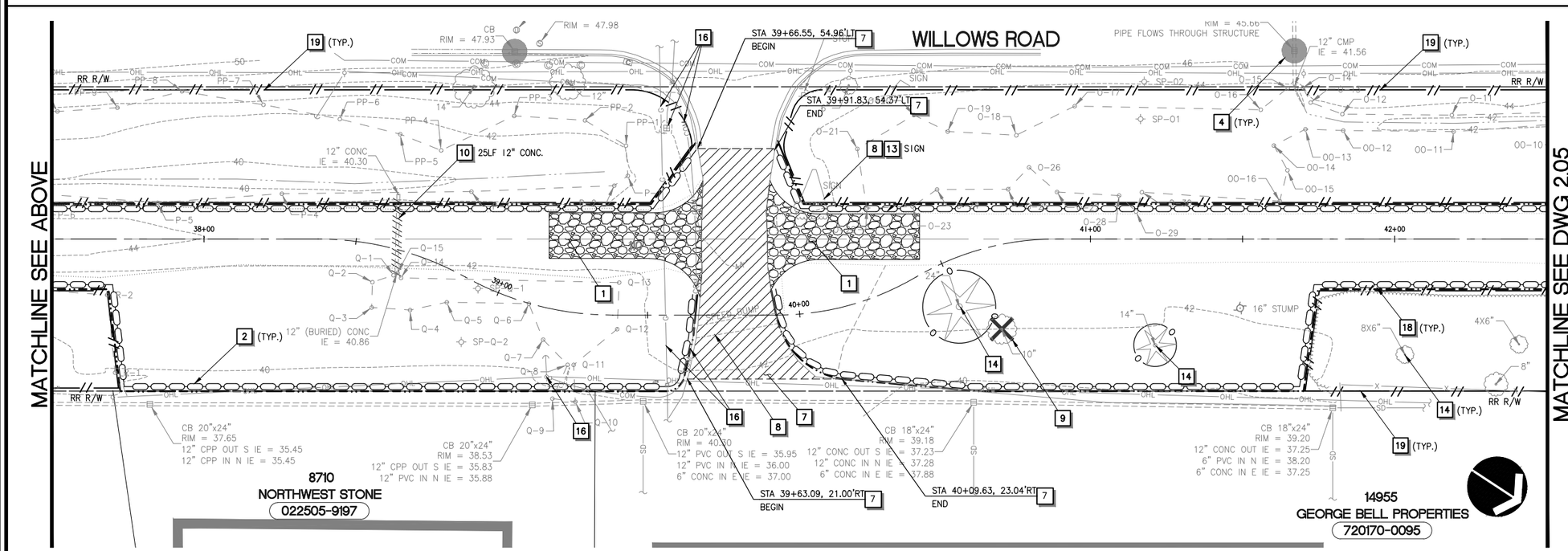

TESC AND DEMOLITION NOTES

1. INSTALL STABILIZED CONSTRUCTION ENTRANCE PER COR STD DETAIL 503.
2. INSTALL WATTLE PER WSDOT STD PLAN 1-30.30-01.
3. NOT USED.
4. INSTALL STORM DRAIN INLET PROTECTION PER WSDOT STD PLAN 1-40.20-00.
5. SAWCUT AND REMOVE PAVEMENT 24" MIN. FROM EDGE OF EXISTING ASPHALT CONCRETE PAVEMENT UNLESS NOTED OTHERWISE. REPLACE EXISTING PAVEMENT TO LIMITS SHOWN PER TYPICAL ROADWAY RECONSTRUCTION SECTION ON DWG 3.17.
6. REMOVE EXISTING CEMENT CONCRETE CURB, GUTTER AND/OR SIDEWALK AS REQUIRED FOR INSTALLATION OF IMPROVEMENTS. CURB, GUTTER AND/OR SIDEWALK SHALL BE REMOVED TO THE NEAREST JOINT BEYOND THE IMPROVEMENTS.
7. REMOVE EXISTING ASPHALT CONCRETE PAVEMENT OR CONCRETE DRIVEWAY, LIMITS PER PLAN. ACCESS SHALL BE MAINTAINED AT ALL TIMES.
8. POWER SUPPLY LINE TO EXISTING BUSINESS SIGN IS BELIEVE TO BE UNDER PAVEMENT, CONTRACTOR SHALL VERIFY AND COORDINATE WITH PROPERTY OWNER PRIOR TO WORK.
9. REMOVE EXISTING TREE(S)/SHRUB(S).
10. REMOVE PORTION OF EXISTING STORM DRAIN, LIMITS PER PLAN.
11. REMOVE EXISTING FENCE, RAILING, BARRIER, OR TIES LIMITS PER PLAN.
12. EXISTING LANDSCAPE FEATURES OR STRUCTURE TO REMAIN, PROTECT DURING CONSTRUCTION.
13. REMOVE EXISTING FEATURE AND PROPERLY STORE AND PROTECT FROM DAMAGES FOR LATER INSTALLATION.
14. EXISTING TREE(S) TO REMAIN, PROTECT DURING CONSTRUCTION.
15. EXISTING BRIDGE TO REMAIN, SEE BRIDGE PLANS FOR IMPROVEMENTS.
16. EXISTING UTILITY TO REMAIN, PROTECT DURING CONSTRUCTION.
17. INSTALL TEMPORARY SECURITY FENCE (MIN. 6' HIGH CHAIN LINK FENCE) AROUND WORK ZONE.
18. CLEARING AND GRUBBING LIMITS. CLEARING LIMITS SHALL BE FLAGGED AND MAINTAINED THROUGHOUT CONSTRUCTION.
19. SELECT CLEARING OF INVASIVE SPECIES, LIMITS AS DIRECTED BY CITY INSPECTOR.
20. PROVIDE DEBRIS CATCHMENT FOR BRIDGE WORK. SEE SPECIFICATIONS FOR REQUIREMENTS.
21. EXISTING SURVEY BENCHMARK TO BE REPLACED, SEE SPECIFICATIONS FOR REQUIREMENTS.

GENERAL TESC NOTES

1. CATCH BASIN INLET PROTECTION SHALL BE PROVIDED AND MAINTAINED AT ALL EXISTING AND PROPOSED CATCH BASIN PRIOR TO AND FOR THE DURATION OF CONSTRUCTION OPERATIONS. PROTECTION MEASURES FOR PROPOSED CATCH BASINS ARE NOT SHOWN ON TESC PLAN FOR CLARIFICATION.
2. LOCATION OF TESC MEASURES SHOWN ARE APPROXIMATE AND SHALL BE FIELD LOCATED TO ACCOMMODATE SITE CONDITIONS AND WORK SCHEDULE.
3. CONTRACTOR SHALL INSTALL HIGH VISIBILITY FENCE PER WSDOT STD PLAN 1-10.10-01 AS DIRECTED BY CITY INSPECTOR.
4. THE CONTRACTOR SHALL NOT REMOVE ANY TREES WITHIN THE WORKING LIMITS OF THE PROJECT NOT IDENTIFIED FOR REMOVAL WITHOUT APPROVAL FROM THE ENGINEER.
5. SEE SIGNING AND STRIPING PLANS FOR SIGN REMOVAL AND RELOCATION.

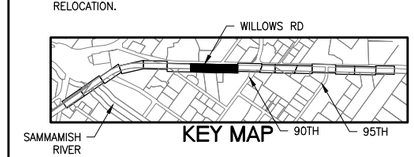

HORZ. SCALE 20' 0' 20' 40' IN FEET

CALL BEFORE YOU DIG 1-800-424-5555

CityofRedmond WASHINGTON

CITY OF REDMOND
PUBLIC WORKS DEPARTMENT
15670 NE 85TH STREET - REDMOND, WA 98073-9710

Redmond Central Connector
Phase II
City Project No. 20021314
Federal Aid No. CM-1065(011)

otak
Hammi Global Partner
11241 Willows Road NE
Suite 200
Redmond, Washington 98052
Phone: (425) 822-4446
FAX: (425) 827-9577
www.otak.com

DESIGN ENGR.	DRAWN	CHECKED
TP/SW	AK/EW	NV/DS

NO.	REVISION COMMENTS	BY	REVIEW	DATE

STATE OF WASHINGTON NICO A. VANDERKAMP 30792 REGISTERED PROFESSIONAL ENGINEER 1/14/16

TESC AND DEMOLITION PLAN

January 2016

PROJECT NO. OTAK 32246
SHEET: 8 OF: 111
DRAWING NO. 2.04

Plotted: Jan 14, 2016 - 9:28am touta K:\project\32200\32246\Dwg\2.01-2.08.dwg Layout Name: 2.04

XREF LIST
Ltscale: 1
Resolved
TTLBLK
S246Y220
C246R500
C246R270
S246B190
C246N035
C246T460

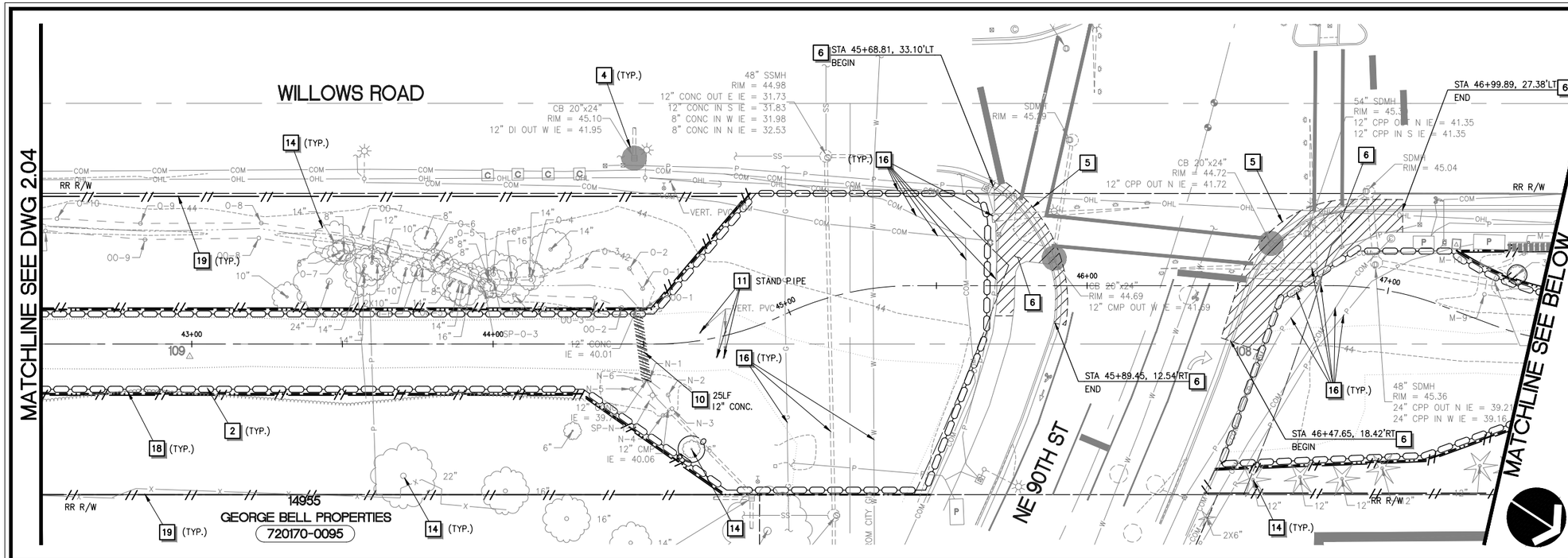

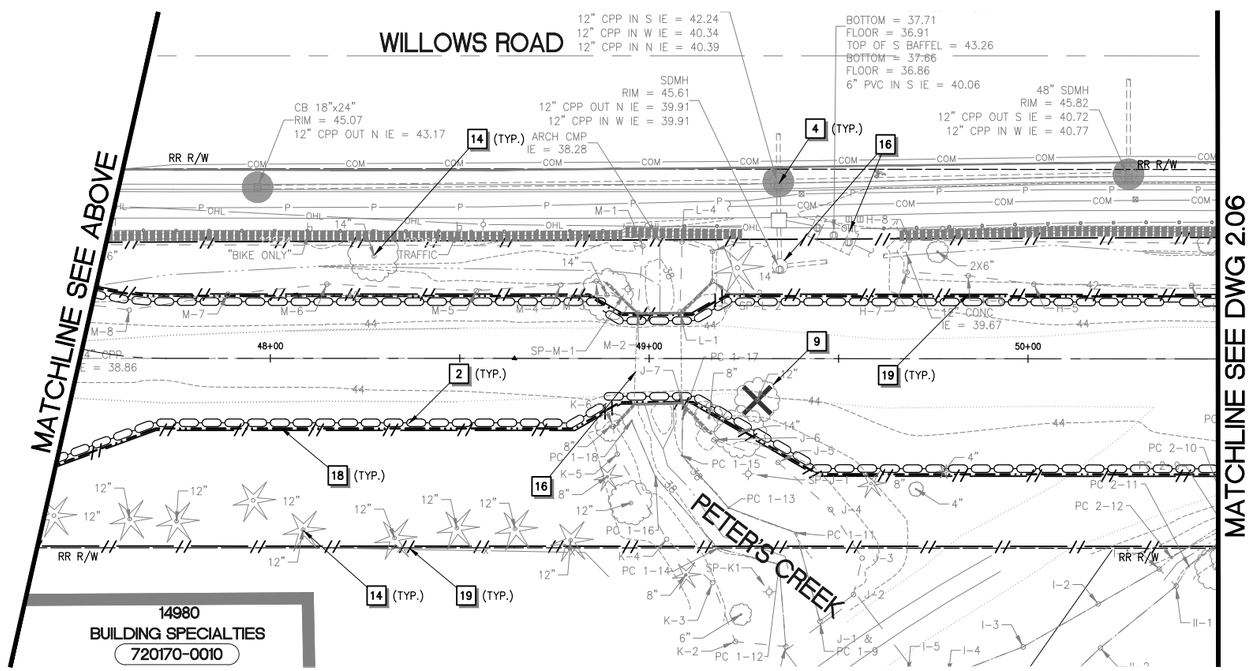

TESC AND DEMOLITION NOTES

1. INSTALL STABILIZED CONSTRUCTION ENTRANCE PER COR STD DETAIL 503.
2. INSTALL WATTLE PER WSDOT STD PLAN 1-30.30-01.
3. NOT USED.
4. INSTALL STORM DRAIN INLET PROTECTION PER WSDOT STD PLAN I-40.20-00.
5. SAWCUT AND REMOVE PAVEMENT 24" MIN. FROM EDGE OF EXISTING ASPHALT CONCRETE PAVEMENT UNLESS NOTED OTHERWISE. REPLACE EXISTING PAVEMENT TO LIMITS SHOWN PER TYPICAL ROADWAY RECONSTRUCTION SECTION ON DWG 3.17.
6. REMOVE EXISTING CEMENT CONCRETE CURB, GUTTER AND/OR SIDEWALK AS REQUIRED FOR INSTALLATION OF IMPROVEMENTS. CURB, GUTTER AND/OR SIDEWALK SHALL BE REMOVED TO THE NEAREST JOINT BEYOND THE IMPROVEMENTS.
7. REMOVE EXISTING ASPHALT CONCRETE PAVEMENT OR CONCRETE DRIVEWAY, LIMITS PER PLAN. ACCESS SHALL BE MAINTAINED AT ALL TIMES.
8. POWER SUPPLY LINE TO EXISTING BUSINESS SIGN IS BELIEVE TO BE UNDER PAVEMENT, CONTRACTOR SHALL VERIFY AND COORDINATE WITH PROPERTY OWNER PRIOR TO WORK.
9. REMOVE EXISTING TREE(S)/SHRUB(S).
10. REMOVE PORTION OF EXISTING STORM DRAIN, LIMITS PER PLAN.
11. REMOVE EXISTING FENCE, RAILING, BARRIER, OR TIES LIMITS PER PLAN.
12. EXISTING LANDSCAPE FEATURES OR STRUCTURE TO REMAIN, PROTECT DURING CONSTRUCTION.
13. REMOVE EXISTING FEATURE AND PROPERLY STORE AND PROTECT FROM DAMAGES FOR LATER INSTALLATION.
14. EXISTING TREE(S) TO REMAIN, PROTECT DURING CONSTRUCTION.
15. EXISTING BRIDGE TO REMAIN, SEE BRIDGE PLANS FOR IMPROVEMENTS.
16. EXISTING UTILITY TO REMAIN, PROTECT DURING CONSTRUCTION.
17. INSTALL TEMPORARY SECURITY FENCE (MIN. 6' HIGH CHAIN LINK FENCE) AROUND WORK ZONE.
18. CLEARING AND GRUBBING LIMITS. CLEARING LIMITS SHALL BE FLAGGED AND MAINTAINED THROUGHOUT CONSTRUCTION.
19. SELECT CLEARING OF INVASIVE SPECIES, LIMITS AS DIRECTED BY CITY INSPECTOR.
20. PROVIDE DEBRIS CATCHMENT FOR BRIDGE WORK. SEE SPECIFICATIONS FOR REQUIREMENTS.
21. EXISTING SURVEY BENCHMARK TO BE REPLACED, SEE SPECIFICATIONS FOR REQUIREMENTS.

GENERAL TESC NOTES

1. CATCH BASIN INLET PROTECTION SHALL BE PROVIDED AND MAINTAINED AT ALL EXISTING AND PROPOSED CATCH BASIN PRIOR TO AND FOR THE DURATION OF CONSTRUCTION OPERATIONS. PROTECTION MEASURES FOR PROPOSED CATCH BASINS ARE NOT SHOWN ON TESC PLAN FOR CLARIFICATION.
2. LOCATION OF TESC MEASURES SHOWN ARE APPROXIMATE AND SHALL BE FIELD LOCATED TO ACCOMMODATE SITE CONDITIONS AND WORK SCHEDULE.
3. CONTRACTOR SHALL INSTALL HIGH VISIBILITY FENCE PER WSDOT STD PLAN I-10.10-01 AS DIRECTED BY CITY INSPECTOR.
4. THE CONTRACTOR SHALL NOT REMOVE ANY TREES WITHIN THE WORKING LIMITS OF THE PROJECT NOT IDENTIFIED FOR REMOVAL WITHOUT APPROVAL FROM THE ENGINEER.
5. SEE SIGNING AND STRIPING PLANS FOR SIGN REMOVAL AND RELOCATION.

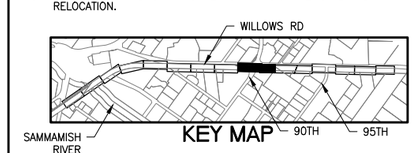

KEY MAP

HORZ. SCALE 20' 0' 20' 40' IN FEET

CALL BEFORE YOU DIG 1-800-424-5555

City of Redmond WASHINGTON

CITY OF REDMOND
PUBLIC WORKS DEPARTMENT
15670 NE 85TH STREET - REDMOND, WA 98073-9710

Redmond Central Connector
Phase II
City Project No. 20021314
Federal Aid No. CM-1065(011)

otak
Hammel Global Partner
11241 Willows Road NE
Suite 200
Redmond, Washington 98052
Phone: (425) 822-4446
FAX: (425) 827-9577
www.otak.com

DESIGN ENGR.	DRAWN	CHECKED
TP/SW	AK/EW	NV/DS

NO.	REVISION COMMENTS	BY	REVIEW	DATE

NICO M. VANDERBEEKEN
STATE OF WASHINGTON
30792
REGISTERED PROFESSIONAL ENGINEER
1/14/16

TESC AND DEMOLITION PLAN

January 2016

PROJECT NO. OTAK 32246
SHEET: 9 OF: 111
DRAWING NO. 2.05

Plotted: Jan 14, 2016 - 9:28am touta K:\project\32200\32246\Dwg\2.01-2.08.dwg Layout Name: 2.05

XREF LIST
Ltscale: 1
Resolved
TTLBLK
S246Y220
C246R500
C246R270
S246B190
C246N035
C246T460

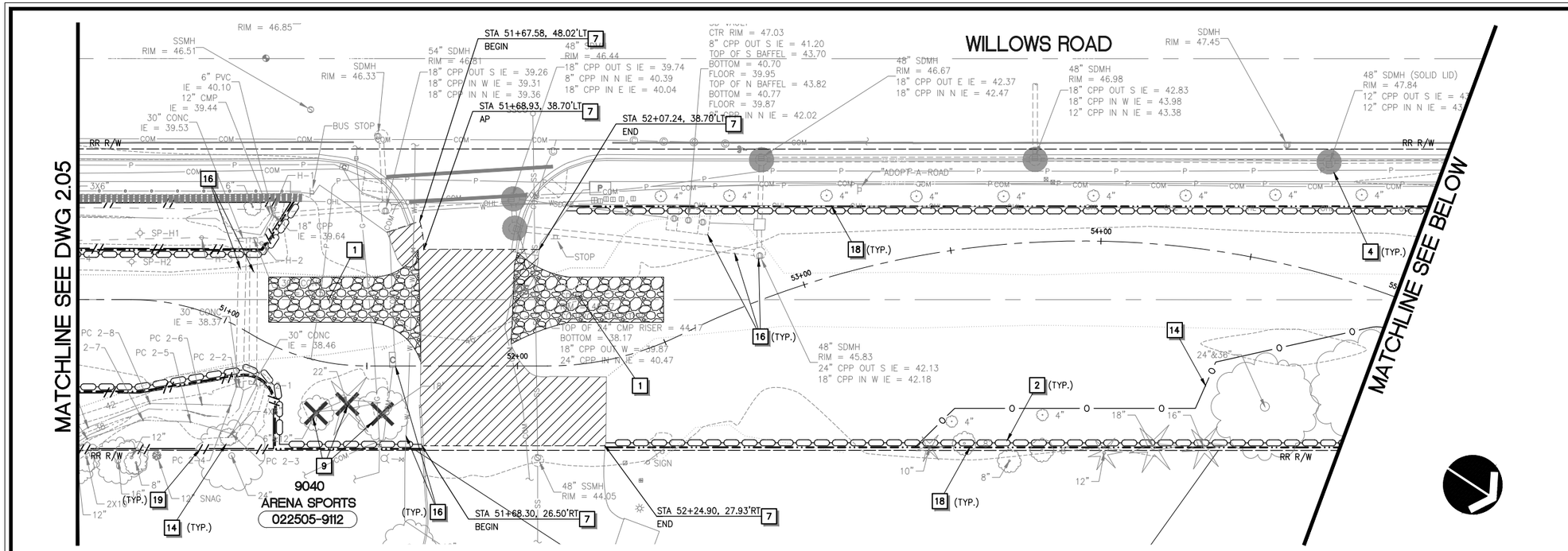

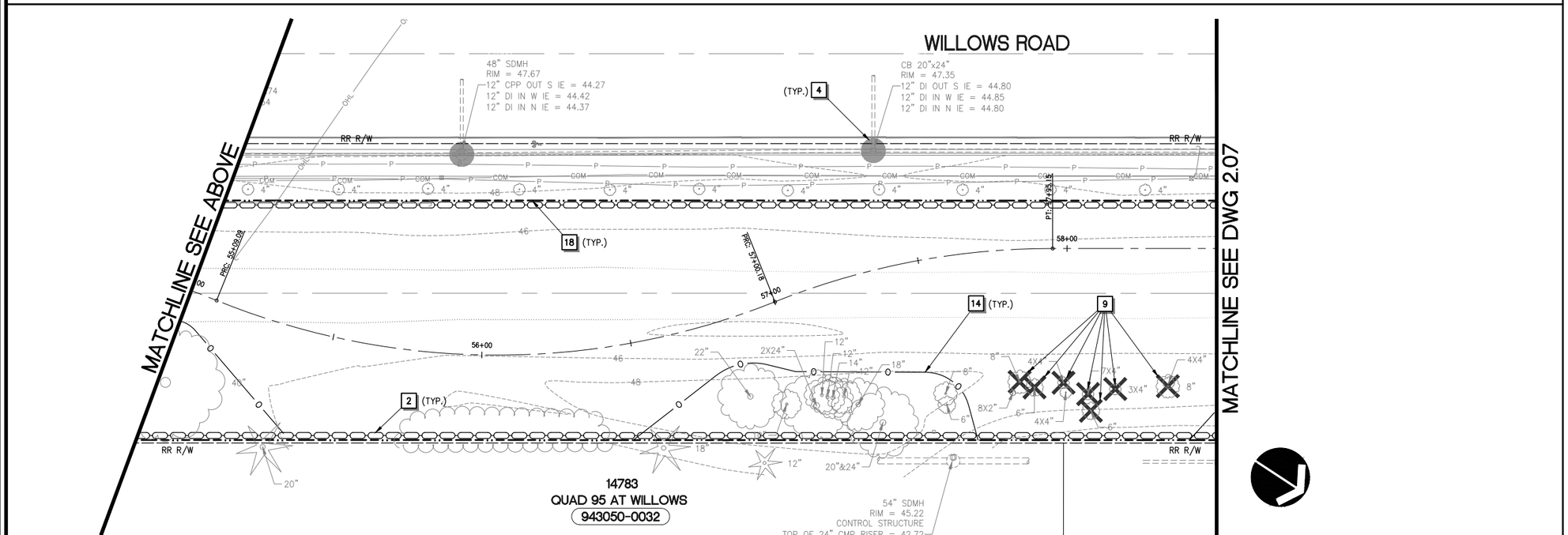

TESC AND DEMOLITION NOTES

1. INSTALL STABILIZED CONSTRUCTION ENTRANCE PER COR STD DETAIL 503.
2. INSTALL WATTLE PER WSDOT STD PLAN 1-30.30-01.
3. NOT USED.
4. INSTALL STORM DRAIN INLET PROTECTION PER WSDOT STD PLAN I-40.20-00.
5. SAWCUT AND REMOVE PAVEMENT 24" MIN. FROM EDGE OF EXISTING ASPHALT CONCRETE PAVEMENT UNLESS NOTED OTHERWISE. REPLACE EXISTING PAVEMENT TO LIMITS SHOWN PER TYPICAL ROADWAY RECONSTRUCTION SECTION ON DWG 3.17.
6. REMOVE EXISTING CEMENT CONCRETE CURB, GUTTER AND/OR SIDEWALK AS REQUIRED FOR INSTALLATION OF IMPROVEMENTS. CURB, GUTTER AND/OR SIDEWALK SHALL BE REMOVED TO THE NEAREST JOINT BEYOND THE IMPROVEMENTS.
7. REMOVE EXISTING ASPHALT CONCRETE PAVEMENT OR CONCRETE DRIVEWAY, LIMITS PER PLAN. ACCESS SHALL BE MAINTAINED AT ALL TIMES.
8. POWER SUPPLY LINE TO EXISTING BUSINESS SIGN IS BELIEVE TO BE UNDER PAVEMENT, CONTRACTOR SHALL VERIFY AND COORDINATE WITH PROPERTY OWNER PRIOR TO WORK.
9. REMOVE EXISTING TREE(S)/SHRUB(S).
10. REMOVE PORTION OF EXISTING STORM DRAIN, LIMITS PER PLAN.
11. REMOVE EXISTING FENCE, RAILING, BARRIER, OR TIES LIMITS PER PLAN.
12. EXISTING LANDSCAPE FEATURES OR STRUCTURE TO REMAIN, PROTECT DURING CONSTRUCTION.
13. REMOVE EXISTING FEATURE AND PROPERLY STORE AND PROTECT FROM DAMAGES FOR LATER INSTALLATION.
14. EXISTING TREE(S) TO REMAIN, PROTECT DURING CONSTRUCTION.
15. EXISTING BRIDGE TO REMAIN, SEE BRIDGE PLANS FOR IMPROVEMENTS.
16. EXISTING UTILITY TO REMAIN, PROTECT DURING CONSTRUCTION.
17. INSTALL TEMPORARY SECURITY FENCE (MIN. 6' HIGH CHAIN LINK FENCE) AROUND WORK ZONE.
18. CLEARING AND GRUBBING LIMITS. CLEARING LIMITS SHALL BE FLAGGED AND MAINTAINED THROUGHOUT CONSTRUCTION.
19. SELECT CLEARING OF INVASIVE SPECIES, LIMITS AS DIRECTED BY CITY INSPECTOR.
20. PROVIDE DEBRIS CATCHMENT FOR BRIDGE WORK. SEE SPECIFICATIONS FOR REQUIREMENTS.
21. EXISTING SURVEY BENCHMARK TO BE REPLACED, SEE SPECIFICATIONS FOR REQUIREMENTS.

GENERAL TESC NOTES

1. CATCH BASIN INLET PROTECTION SHALL BE PROVIDED AND MAINTAINED AT ALL EXISTING AND PROPOSED CATCH BASIN PRIOR TO AND FOR THE DURATION OF CONSTRUCTION OPERATIONS. PROTECTION MEASURES FOR PROPOSED CATCH BASINS ARE NOT SHOWN ON TESC PLAN FOR CLARIFICATION.
2. LOCATION OF TESC MEASURES SHOWN ARE APPROXIMATE AND SHALL BE FIELD LOCATED TO ACCOMMODATE SITE CONDITIONS AND WORK SCHEDULE.
3. CONTRACTOR SHALL INSTALL HIGH VISIBILITY FENCE PER WSDOT STD PLAN I-10.10-01 AS DIRECTED BY CITY INSPECTOR.
4. THE CONTRACTOR SHALL NOT REMOVE ANY TREES WITHIN THE WORKING LIMITS OF THE PROJECT NOT IDENTIFIED FOR REMOVAL WITHOUT APPROVAL FROM THE ENGINEER.
5. SEE SIGNING AND STRIPING PLANS FOR SIGN REMOVAL AND RELOCATION.

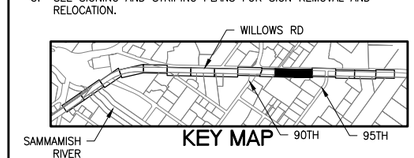

HORZ. SCALE 20' 0' 20' 40' IN FEET

CALL BEFORE YOU DIG 1-800-424-5555

CityofRedmond WASHINGTON

CITY OF REDMOND
PUBLIC WORKS DEPARTMENT
15670 NE 85TH STREET - REDMOND, WA 98073-9710

Redmond Central Connector
Phase II
City Project No. 20021314
Federal Aid No. CM-1065(011)

otak
HammGlobal Partner
11241 Willows Road NE
Suite 200
Redmond, Washington 98052
Phone: (425) 822-4446
FAX: (425) 827-9577
www.otak.com

DESIGN ENGR.	DRAWN	CHECKED
TP/SW	AK/EW	NV/DS

NO.	REVISION COMMENTS	BY	REVIEW	DATE

NICO M. VANDERBERG, STATE OF WASHINGTON, 30792, REGISTERED PROFESSIONAL ENGINEER
1/14/16

TESC AND DEMOLITION PLAN

January 2016

PROJECT NO. OTAK 32246
SHEET: 10 OF: 111
DRAWING NO. 2.06

Plotted: Jan 14, 2016 - 9:29am toata K:\project\32200\32246\Dwg\2.01-2.08.dwg Layout Name: 2.06

XREF LIST
Ltscale: 1
Resolved
TTLBLK
S246Y220
C246R500
C246R270
S246B190
C246N035
C246T460

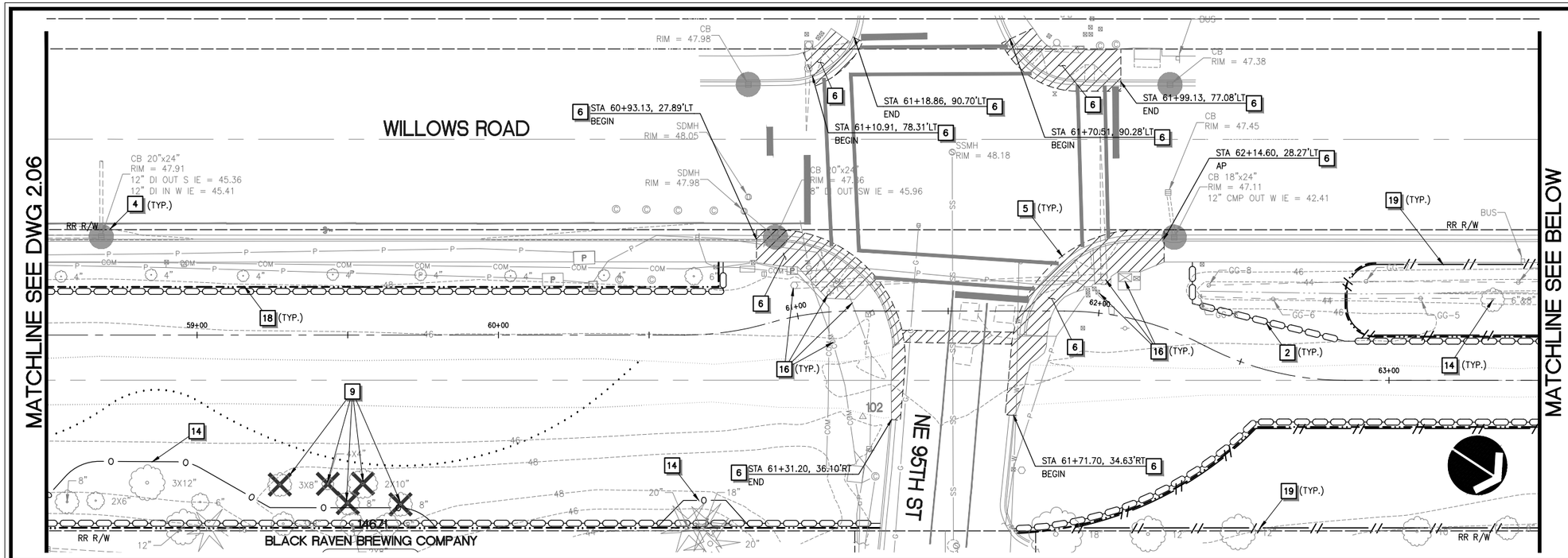

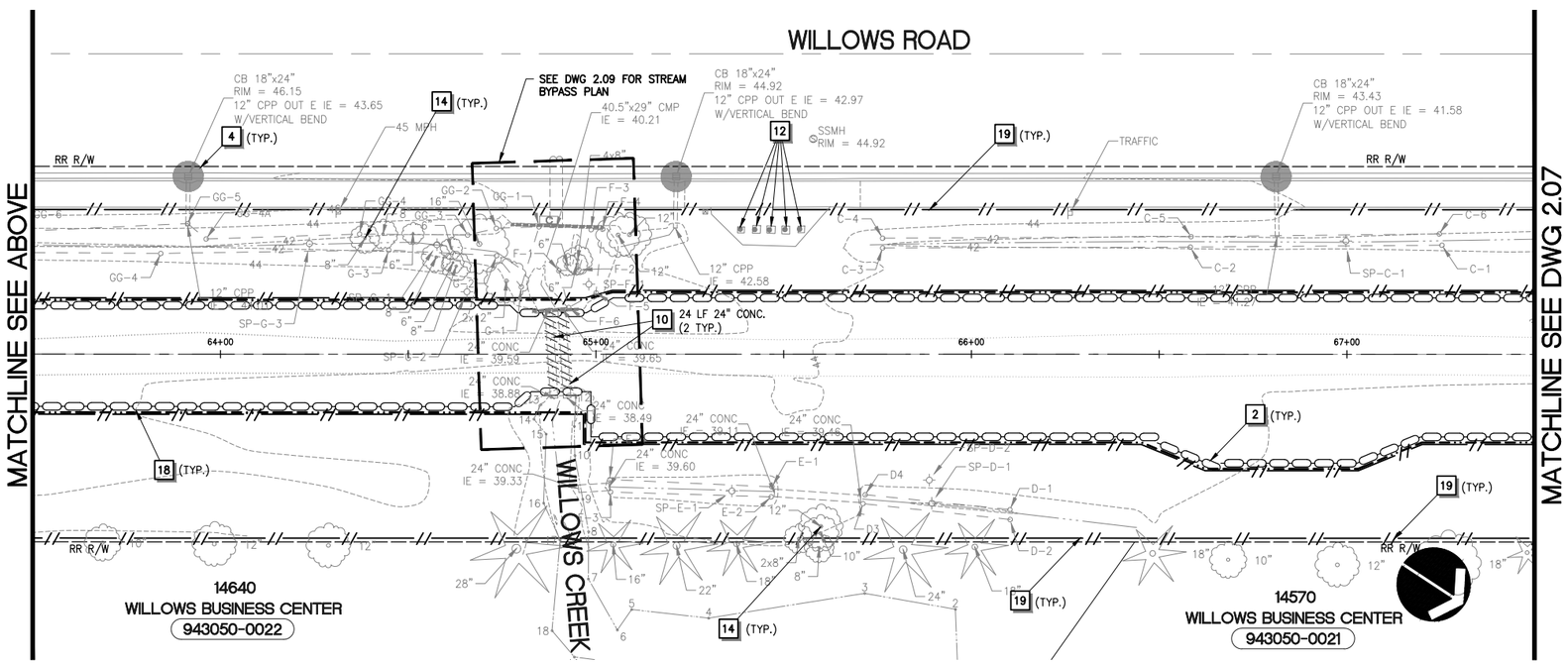

TESC AND DEMOLITION NOTES

1. INSTALL STABILIZED CONSTRUCTION ENTRANCE PER COR STD DETAIL 503.
2. INSTALL WATTLE PER WSDOT STD PLAN 1-30.30-01.
3. NOT USED.
4. INSTALL STORM DRAIN INLET PROTECTION PER WSDOT STD PLAN I-40.20-00.
5. SAWCUT AND REMOVE PAVEMENT 24" MIN. FROM EDGE OF EXISTING ASPHALT CONCRETE PAVEMENT UNLESS NOTED OTHERWISE. REPLACE EXISTING PAVEMENT TO LIMITS SHOWN PER TYPICAL ROADWAY RECONSTRUCTION SECTION ON DWG 3.17.
6. REMOVE EXISTING CEMENT CONCRETE CURB, GUTTER AND/OR SIDEWALK AS REQUIRED FOR INSTALLATION OF IMPROVEMENTS. CURB, GUTTER AND/OR SIDEWALK SHALL BE REMOVED TO THE NEAREST JOINT BEYOND THE IMPROVEMENTS.
7. REMOVE EXISTING ASPHALT CONCRETE PAVEMENT OR CONCRETE DRIVEWAY, LIMITS PER PLAN. ACCESS SHALL BE MAINTAINED AT ALL TIMES.
8. POWER SUPPLY LINE TO EXISTING BUSINESS SIGN IS BELIEVE TO BE UNDER PAVEMENT, CONTRACTOR SHALL VERIFY AND COORDINATE WITH PROPERTY OWNER PRIOR TO WORK.
9. REMOVE EXISTING TREE(S)/SHRUB(S).
10. REMOVE PORTION OF EXISTING STORM DRAIN, LIMITS PER PLAN.
11. REMOVE EXISTING FENCE, RAILING, BARRIER, OR TIES LIMITS PER PLAN.
12. EXISTING LANDSCAPE FEATURES OR STRUCTURE TO REMAIN, PROTECT DURING CONSTRUCTION.
13. REMOVE EXISTING FEATURE AND PROPERLY STORE AND PROTECT FROM DAMAGES FOR LATER INSTALLATION.
14. EXISTING TREE(S) TO REMAIN, PROTECT DURING CONSTRUCTION.
15. EXISTING BRIDGE TO REMAIN, SEE BRIDGE PLANS FOR IMPROVEMENTS.
16. EXISTING UTILITY TO REMAIN, PROTECT DURING CONSTRUCTION.
17. INSTALL TEMPORARY SECURITY FENCE (MIN. 6' HIGH CHAIN LINK FENCE) AROUND WORK ZONE.
18. CLEARING AND GRUBBING LIMITS. CLEARING LIMITS SHALL BE FLAGGED AND MAINTAINED THROUGHOUT CONSTRUCTION.
19. SELECT CLEARING OF INVASIVE SPECIES, LIMITS AS DIRECTED BY CITY INSPECTOR.
20. PROVIDE DEBRIS CATCHMENT FOR BRIDGE WORK. SEE SPECIFICATIONS FOR REQUIREMENTS.
21. EXISTING SURVEY BENCHMARK TO BE REPLACED, SEE SPECIFICATIONS FOR REQUIREMENTS.

GENERAL TESC NOTES

1. CATCH BASIN INLET PROTECTION SHALL BE PROVIDED AND MAINTAINED AT ALL EXISTING AND PROPOSED CATCH BASIN PRIOR TO AND FOR THE DURATION OF CONSTRUCTION OPERATIONS. PROTECTION MEASURES FOR PROPOSED CATCH BASINS ARE NOT SHOWN ON TESC PLAN FOR CLARIFICATION.
2. LOCATION OF TESC MEASURES SHOWN ARE APPROXIMATE AND SHALL BE FIELD LOCATED TO ACCOMMODATE SITE CONDITIONS AND WORK SCHEDULE.
3. CONTRACTOR SHALL INSTALL HIGH VISIBILITY FENCE PER WSDOT STD PLAN I-10.10-01 AS DIRECTED BY CITY INSPECTOR.
4. THE CONTRACTOR SHALL NOT REMOVE ANY TREES WITHIN THE WORKING LIMITS OF THE PROJECT NOT IDENTIFIED FOR REMOVAL WITHOUT APPROVAL FROM THE ENGINEER.
5. SEE SIGNING AND STRIPING PLANS FOR SIGN REMOVAL AND RELOCATION.

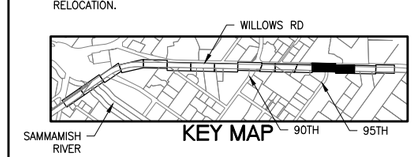

HORZ. SCALE 20' 0' 20' 40' IN FEET

CALL BEFORE YOU DIG 1-800-424-5555

CityofRedmond WASHINGTON

CITY OF REDMOND
PUBLIC WORKS DEPARTMENT
15670 NE 85TH STREET - REDMOND, WA 98073-9710

Redmond Central Connector
Phase II
City Project No. 20021314
Federal Aid No. CM-1065(011)

otak
HammGlobal Partner
11241 Willows Road NE
Suite 200
Redmond, Washington 98052
Phone: (425) 822-4446
FAX: (425) 827-9577
www.otak.com

DESIGN ENGR.	DRAWN	CHECKED
TP/SW	AK/EW	NV/DS

NO.	REVISION COMMENTS	BY	REVIEW	DATE

NICO W. VANDERHOEVEN STATE OF WASHINGTON 30792 REGISTERED PROFESSIONAL ENGINEER 1/14/16

TESC AND DEMOLITION PLAN

January 2016

PROJECT NO. OTAK 32246
SHEET: 11 OF: 111
DRAWING NO. 2.07

Plotted: Jan 14, 2016 - 9:29am touta K:\project\32200\32246\Dwg\2.01-2.08.dwg Layout Name: 2.07

XREF LIST
Ltscale: 1
Resolved
TTLBLK
S246Y220
C246R500
C246R270
S246B190
C246N035
C246T460

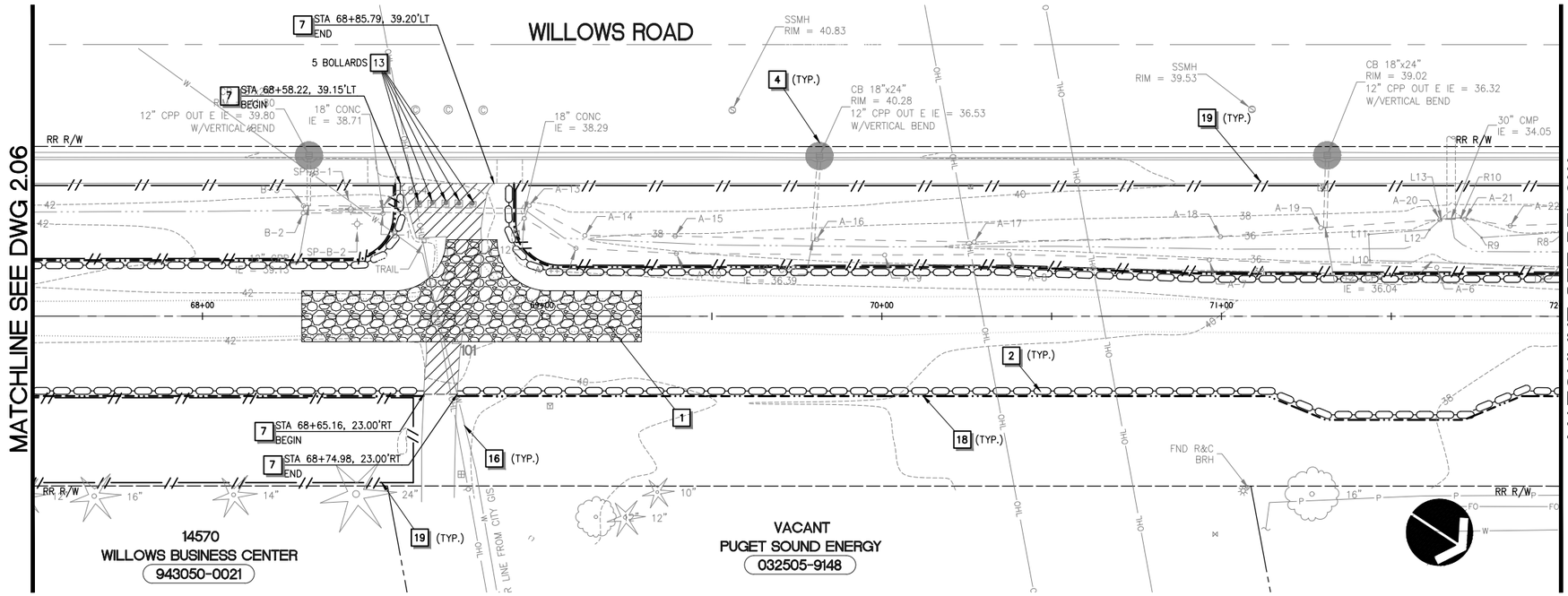

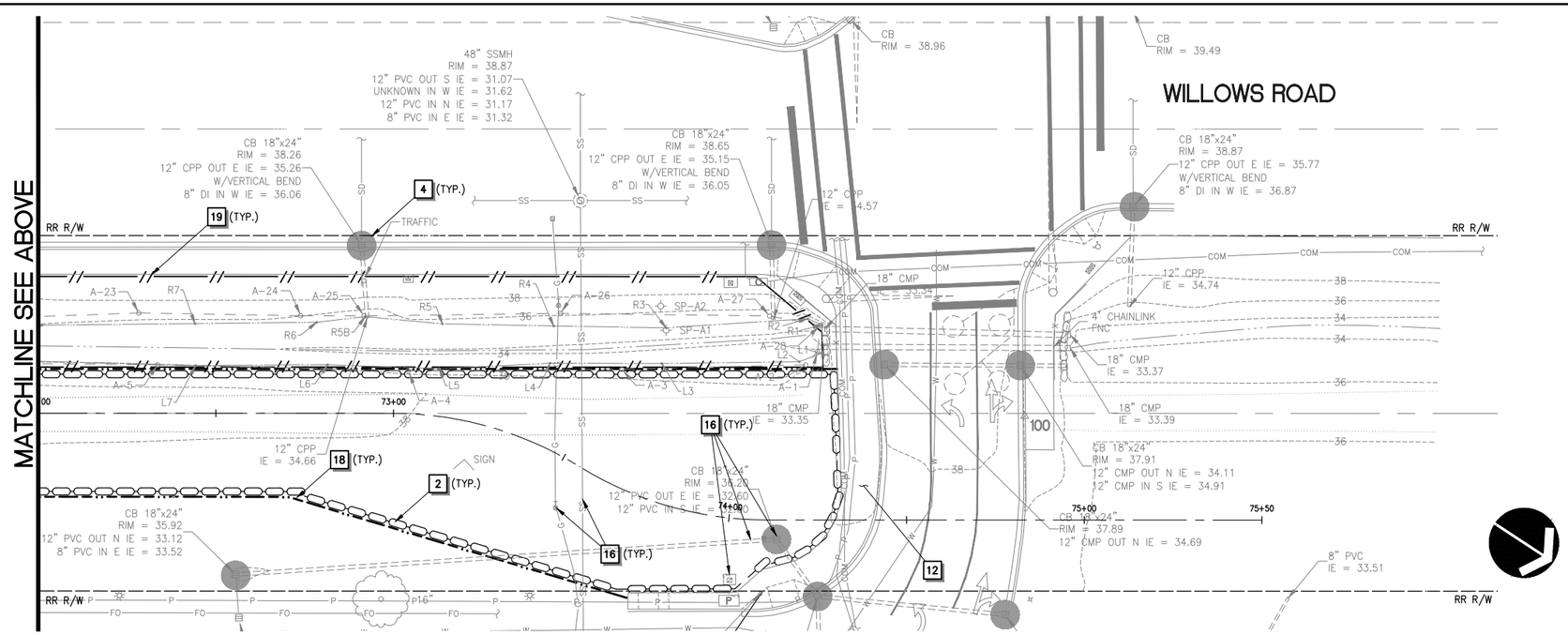

TESC AND DEMOLITION NOTES

1. INSTALL STABILIZED CONSTRUCTION ENTRANCE PER COR STD DETAIL 503.
2. INSTALL WATTLE PER WSDOT STD PLAN 1-30.30-01.
3. NOT USED.
4. INSTALL STORM DRAIN INLET PROTECTION PER WSDOT STD PLAN I-40.20-00.
5. SAWCUT AND REMOVE PAVEMENT 24" MIN. FROM EDGE OF EXISTING ASPHALT CONCRETE PAVEMENT UNLESS NOTED OTHERWISE. REPLACE EXISTING PAVEMENT TO LIMITS SHOWN PER TYPICAL ROADWAY RECONSTRUCTION SECTION ON DWG 3.17.
6. REMOVE EXISTING CEMENT CONCRETE CURB, GUTTER AND/OR SIDEWALK AS REQUIRED FOR INSTALLATION OF IMPROVEMENTS. CURB, GUTTER AND/OR SIDEWALK SHALL BE REMOVED TO THE NEAREST JOINT BEYOND THE IMPROVEMENTS.
7. REMOVE EXISTING ASPHALT CONCRETE PAVEMENT OR CONCRETE DRIVEWAY, LIMITS PER PLAN. ACCESS SHALL BE MAINTAINED AT ALL TIMES.
8. POWER SUPPLY LINE TO EXISTING BUSINESS SIGN IS BELIEVE TO BE UNDER PAVEMENT, CONTRACTOR SHALL VERIFY AND COORDINATE WITH PROPERTY OWNER PRIOR TO WORK.
9. REMOVE EXISTING TREE(S)/SHRUB(S).
10. REMOVE PORTION OF EXISTING STORM DRAIN, LIMITS PER PLAN.
11. REMOVE EXISTING FENCE, RAILING, BARRIER, OR TIES LIMITS PER PLAN.
12. EXISTING LANDSCAPE FEATURES OR STRUCTURE TO REMAIN, PROTECT DURING CONSTRUCTION.
13. REMOVE EXISTING FEATURE AND PROPERLY STORE AND PROTECT FROM DAMAGES FOR LATER INSTALLATION.
14. EXISTING TREE(S) TO REMAIN, PROTECT DURING CONSTRUCTION.
15. EXISTING BRIDGE TO REMAIN, SEE BRIDGE PLANS FOR IMPROVEMENTS.
16. EXISTING UTILITY TO REMAIN, PROTECT DURING CONSTRUCTION.
17. INSTALL TEMPORARY SECURITY FENCE (MIN. 6' HIGH CHAIN LINK FENCE) AROUND WORK ZONE.
18. CLEARING AND GRUBBING LIMITS. CLEARING LIMITS SHALL BE FLAGGED AND MAINTAINED THROUGHOUT CONSTRUCTION.
19. SELECT CLEARING OF INVASIVE SPECIES, LIMITS AS DIRECTED BY CITY INSPECTOR.
20. PROVIDE DEBRIS CATCHMENT FOR BRIDGE WORK. SEE SPECIFICATIONS FOR REQUIREMENTS.
21. EXISTING SURVEY BENCHMARK TO BE REPLACED, SEE SPECIFICATIONS FOR REQUIREMENTS.

GENERAL TESC NOTES

1. CATCH BASIN INLET PROTECTION SHALL BE PROVIDED AND MAINTAINED AT ALL EXISTING AND PROPOSED CATCH BASIN PRIOR TO AND FOR THE DURATION OF CONSTRUCTION OPERATIONS. PROTECTION MEASURES FOR PROPOSED CATCH BASINS ARE NOT SHOWN ON TESC PLAN FOR CLARIFICATION.
2. LOCATION OF TESC MEASURES SHOWN ARE APPROXIMATE AND SHALL BE FIELD LOCATED TO ACCOMMODATE SITE CONDITIONS AND WORK SCHEDULE.
3. CONTRACTOR SHALL INSTALL HIGH VISIBILITY FENCE PER WSDOT STD PLAN I-10.10-01 AS DIRECTED BY CITY INSPECTOR.
4. THE CONTRACTOR SHALL NOT REMOVE ANY TREES WITHIN THE WORKING LIMITS OF THE PROJECT NOT IDENTIFIED FOR REMOVAL WITHOUT APPROVAL FROM THE ENGINEER.
5. SEE SIGNING AND STRIPING PLANS FOR SIGN REMOVAL AND RELOCATION.

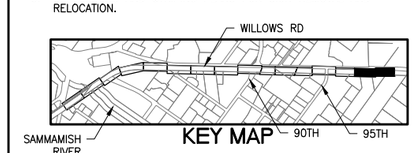

HORZ. SCALE 20' 0' 20' 40' IN FEET

CALL BEFORE YOU DIG 1-800-424-5555

City of Redmond WASHINGTON

CITY OF REDMOND
PUBLIC WORKS DEPARTMENT
15670 NE 85TH STREET - REDMOND, WA 98073-9710

Redmond Central Connector
Phase II
City Project No. 20021314
Federal Aid No. CM-1065(011)

otak
Hammi Global Partner
11241 Willows Road NE
Suite 200
Redmond, Washington 98052
Phone: (425) 822-4446
FAX: (425) 827-9577
www.otak.com

DESIGN ENGR.	DRAWN	CHECKED
TP/SW	AK/EW	NV/DS

NO.	REVISION COMMENTS	BY	REVIEW	DATE

NICO M. VANDERGRIFT, STATE OF WASHINGTON, 30792, REGISTERED PROFESSIONAL ENGINEER
1/14/16

TESC AND DEMOLITION PLAN

January 2016

PROJECT NO. OTAK 32246
SHEET: 12 OF: 111
DRAWING NO. 2.08

Plotted: Jan 14, 2016 - 9:29am touta K:\project\32200\32246\Dwg\2.01-2.08.dwg Layout Name: 2.08

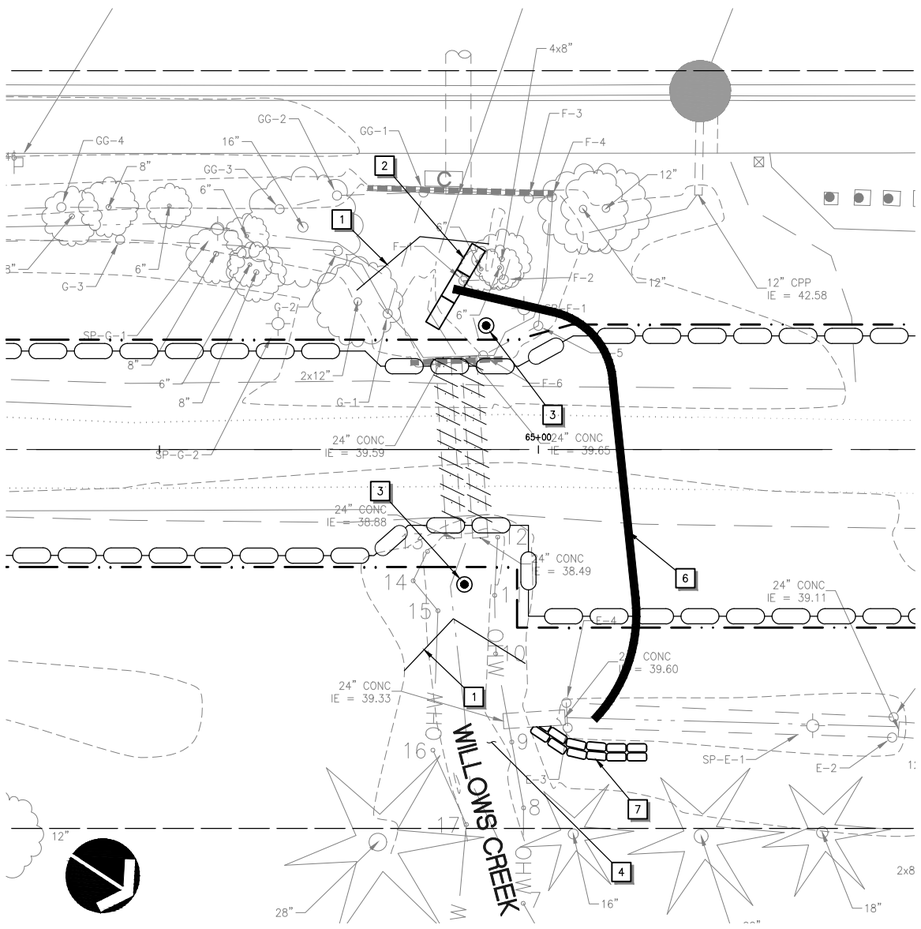

TTEMPORARY STREAM BYPASS PLAN

SCALE: 1"=10'

STREAM BYPASS NOTES

1. INSTALL FISH SCREEN. SEE DETAIL THIS SHEET.
2. INSTALL STREAM BYPASS BERM PER DETAIL THIS SHEET.
3. DEWATERING WELL, LOCATION SHALL BE FIELD VERIFIED. SEE PROJECT GEOTECHNICAL REPORT FOR REQUIREMENTS. DEWATERING WATER SHALL BE DISCHARGED THROUGH SEDIMENTATION FILTER BAG OR SETTLING TANK.
4. LIMITED ACCESS AREA. MINIMIZE DISTURBANCE TO STREAM BANK VEGETATION.
5. 3' HIGH SAND BAG BERM. WRAP SANDBAGS IN PLASTIC SHEETING AND KEY INTO STREAMBED APPROX. 6".
6. INSTALL TEMPORARY STREAM BYPASS SYSTEM. BYPASS SYSTEM SHALL BE SIZED TO ACCOMMODATE FLOWS. BRACE AS NEEDED TO RESIST THRUST FORCES AT BENDS. ANTICIPATED FLOWS ARE AS FOLLOWS:
   2YR: 9,875 gpm
   10YR: 23,340 gpm
   25YR: 26,030 gpm
   100YR: 29,170 gpm
7. BYPASS DISCHARGE, LOCATION TO BE FIELD VERIFIED. INSTALL ADDITIONAL SANDBAGS AS NECESSARY TO PREVENT EROSION AT PIPE OUTFALL.

RECOMMENDED BYPASS SEQUENCING

1. INSTALL FISH SCREENS AND REMOVE FISH.
2. ISOLATE WORK AREA WITH BERMS AND INSTALL BYPASS PIPING AND PUMPS.
3. INSTALL TEMPORARY DEWATERING AS NECESSARY.
4. ADJUST TEMPORARY BYPASS AS NECESSARY TO CONSTRUCT FOOTING AND CULVERT.
5. AFTER COMPLETION OF CULVERT INSTALLATION, SLOWLY REINTRODUCE FLOW TO WORK ZONE AS SPECIFIED IN SECTION 8-27 OF SPECIFICATIONS.

GENERAL TESC NOTES

1. ALL TREES SHALL BE PROTECTED UNLESS NOTED OTHERWISE. SEE TESC PLAN FOR ADDITIONAL REQUIREMENTS.

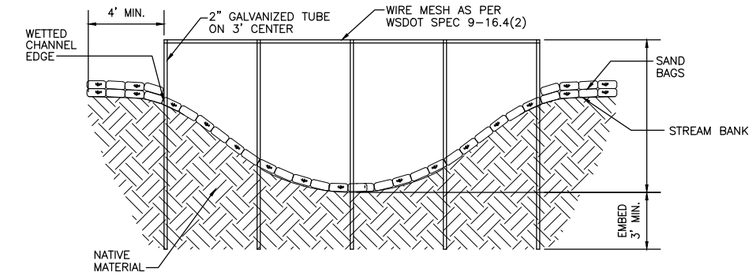

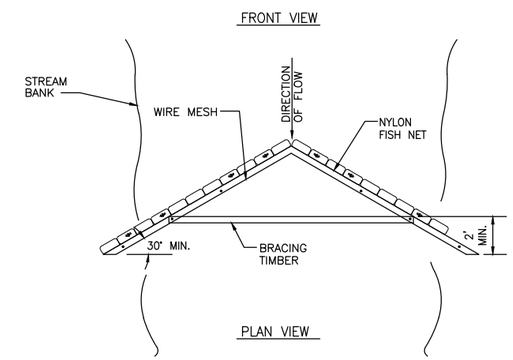

FISH SCREEN DETAIL

NOT TO SCALE

CONSTRUCTION SEQUENCE

1. INSTALL 2" GALVANIZED TUBES ON 3' CENTERS.
2. SECURE WIRE MEST TO 2" GALVANIZED TUBES WITH WIRE FASTENER.
3. SECURE ¼" MAX. GAP NYLON FISH NET TO UPSTRAM SIDE OF WIRE MESH WITH WIRE FASTENER.
4. SECURE NYLON FISH NET TO STREAM BOTTOM WITH SAND BAGS.
5. EXTEND SAND BAGS 4' MIN. BEYOND WETTED EDGE OF STREAM.
6. ADD BRACING TIMBER AS NEEDED TO SUPPORT THE NET.
7. REMOVAL OF DEBRIS FROM THE UPSTREAM SIDE OF THE FENCE IS NECESSARY OTHERWISE THE SCREEN WILL BECOME CLOGGED AND WATER MAY TOPPLE OR BREACH THE SCREEN.

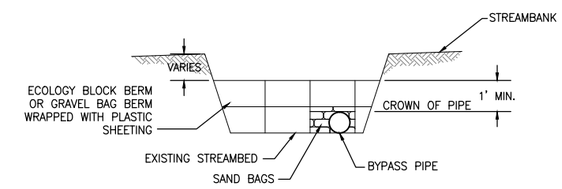

TEMPORARY STREAM BYPASS BERM DETAIL

NOT TO SCALE

CALL BEFORE YOU DIG 1-800-424-5555

CityofRedmond WASHINGTON

CITY OF REDMOND
PUBLIC WORKS DEPARTMENT
15670 NE 85TH STREET - REDMOND, WA 98073-9710

Redmond Central Connector
Phase II
City Project No. 20021314
Federal Aid No. CM-1065(011)

otak
HanmiGlobal Partner
11241 Willows Road NE
Suite 200
Redmond, Washington 98052
Phone: (425) 822-4446
FAX: (425) 827-9577
www.otak.com

DESIGN ENGR.	DRAWN	CHECKED
TP/SW	AK/EW	NV/DS

NO.	REVISION COMMENTS	BY	REVIEW	DATE

STATE OF WASHINGTON NICO M. VANDERKAMP 30792 REGISTERED PROFESSIONAL ENGINEER
1/14/16

TEMPORARY STREAM BYPASS

January 2016

PROJECT NO. OTAK 32246
SHEET: 13 OF: 111
DRAWING NO. 2.09

Plotted: Jan 14, 2016 - 9:30am touta K:\project\32200\32246\Dwg\2.09.dwg Layout Name: 2.09

XREF LIST
Ltscale: 1

Resolved
TTLBLK
C246R500
C246R270
C246N036
C246R900
C246U630
T246X800
RCC II_BASE_TBP
C246G450
S246B190
S246Y220

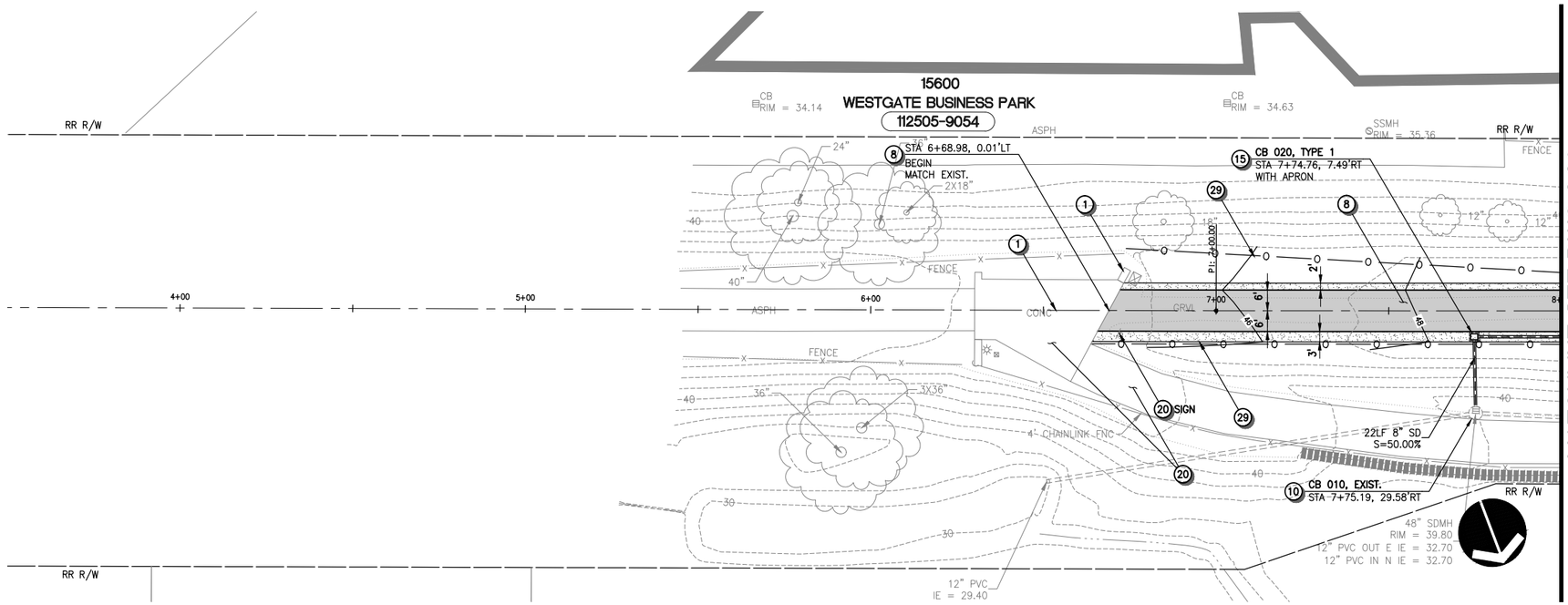

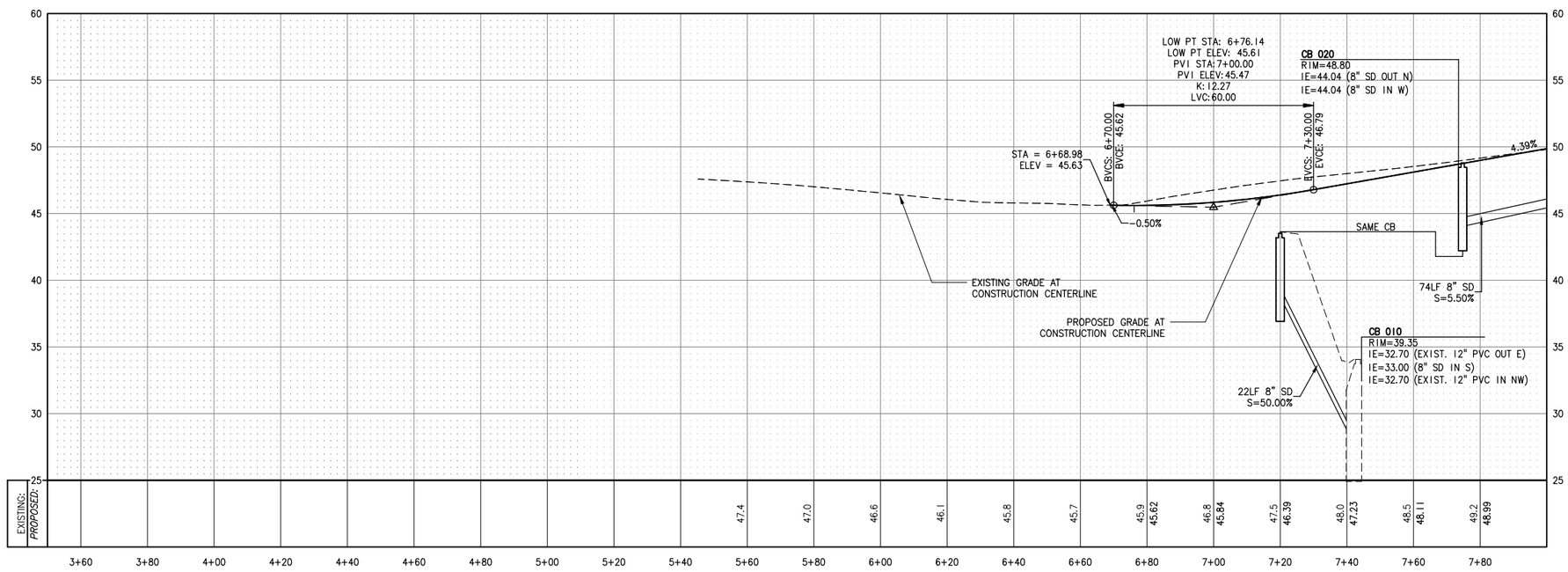

CONSTRUCTION NOTES

1. CONSTRUCTION CENTERLINE, SEE DWGS 1.03–1.04 FOR DETAILS.
2. INSTALL CEMENT CONCRETE CURB AND GUTTER TYPE "A" PER COR STD DETAIL NO. 304.
3. INSTALL CEMENT CONCRETE SIDEWALK PER COR STD DETAIL NO. 303.
4. INSTALL SIDEWALK RAMP, SEE DWGS 3.19–3.20 FOR LAYOUT.
5. RECONSTRUCT DRIVEWAY TO THE LIMITS SHOWN. SEE DWG 3.17 FOR PAVEMENT SECTION AND DWG 3.18 FOR PROFILE.
6. RECONSTRUCT ASPHALT PAVEMENT PER TYPICAL ROADWAY SECTION ON DWG 3.17, LIMITS PER PLAN.
7. INSTALL EXTRUDED CURB PER COR STD DETAIL NO. 304A.
8. CONSTRUCT HMA PAVEMENT TRAIL PER SECTION ON DWG 3.17.
9. CONSTRUCT POROUS PAVEMENT TRAIL PER SECTION ON DWG 3.17.
10. CONNECT TO EXISTING STORM DRAIN.
11. REPLACE EXISTING FRAME AND GRATE PER COR STD DETAIL NO. 631.
12. ADJUST EXISTING CATCH BASIN OR MANHOLE TO FINISHED GRADE. ROTATE GRATE OR COVER TO ALIGN WITH SCORING IF LOCATED WITHIN NEW CEMENT CONCRETE PAVING.
13. INSTALL PIPE INLET PROTECTION PER DETAIL ON DWG 3.22.
14. INSTALL PIPE OUTFALL PROTECTION PER DETAIL ON DWG 3.22.
15. INSTALL DRAINAGE STRUCTURE, TYPE AND SIZE PER PLAN. PROVIDE APRON PER DETAIL ON DWG 3.23 WHERE INDICATED.
16. LIGHT POLE, SEE ILLUMINATION PLANS (DWG 5.01–5.10) FOR DETAILS.
17. INSTALL VEGETATED DISPERSION STRIP PER DETAIL ON DWG 3.22.
18. REPLACE EXIST. CULVERT WITH NEW CULVERT PER DETAIL ON DWG 3.23.
19. INSTALL GRAVEL SHOULDER WITH INFILTRATION TRENCH PER DETAIL ON DWG 3.22.
20. EXISTING FEATURES OR STRUCTURE TO REMAIN, PROTECT DURING CONSTRUCTION.
21. EXISTING UTILITY TO REMAIN, PROTECT DURING CONSTRUCTION.
22. EXISTING UTILITY TO BE RELOCATED OR ADJUSTED TO FINISHED GRADE BY OTHERS.
23. ADJUST EXISTING UTILITY BOX TO FINISHED GRADE. REPLACE EXISTING LID WITH NON–SKID LID AND ROTATE TO ALIGN WITH SCORING IF LOCATED WITHIN NEW CEMENT CONCRETE PAVING.
24. REINSTALL SALVAGED BOLLARD PER COR STD DETAIL 911.
25. INSTALL RETAINING WALL PER DETAILS ON DWG 3.21.
26. SEE BRIDGE PLANS (DWG 4.01–4.13) FOR IMPROVEMENTS.
27. SEE HARDSCAPE/URBAN DESIGN PLANS (DWG 6.01–6.43) FOR DETAILS.
28. INSTALL BI–AXIAL GEOGRID AT PAVEMENT TRANSITIONS PER DETAIL ON DWG 3.18.
29. INSTALL SAFETY RAIL OR CHAINLINK FENCE PER HARDSCAPE/URBAN DESIGN PLANS (DWG 6.01–6.43).
30. REPLACE AND RESET EXISTING SURVEY BENCH MARK, SEE SPECIFICATIONS FOR REQUIREMENTS.
31. CONSTRUCT LANDSCAPE BERM WITH EXCESS MATERIAL EXCAVATED FROM SITE TO APPROX. SIZE AND HEIGHT AS SHOWN.
32. POTHOLE EXISTING UTILITY CROSSING AND NOTIFY THE ENGINEER IF CONFLICTS EXIST.

GENERAL NOTES

1. ALL DIMENSIONS AND STATION AND OFFSET REFERENCES ARE TO FACE OF CURB UNLESS NOTED OTHERWISE.

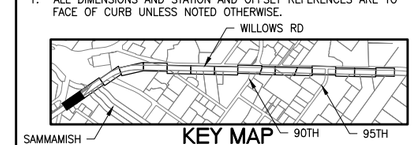

VERT. SCALE 5' 0' 5' 10' IN FEET

HORZ. SCALE 20' 0' 20' 40' IN FEET

CALL BEFORE YOU DIG 1–800–424–5555

CityofRedmond WASHINGTON

CITY OF REDMOND
PUBLIC WORKS DEPARTMENT
15670 NE 85TH STREET – REDMOND, WA 98073–9710

Redmond Central Connector
Phase II
City Project No. 20021314
Federal Aid No. CM–1065(011)

otak
HammGlobal Partner
11241 Willows Road NE
Suite 200
Redmond, Washington 98052
Phone: (425) 822–4446
FAX: (425) 827–9577
www.otak.com

DESIGN ENGR.	DRAWN	CHECKED
TP/SW	AK/EW	NV/DS

NO.	REVISION COMMENTS	BY	REVIEW	DATE

NICO M. VANDERGRAFT, STATE OF WASHINGTON, 30793, REGISTERED PROFESSIONAL ENGINEER
1/14/16

TRAIL AND DRAINAGE
PLAN AND PROFILE

January 2016

PROJECT NO. OTAK 32246
SHEET: 14 OF: 111
DRAWING NO. 3.01

Plotted: Jan 14, 2016 – 9:32am touta K:\project\32200\32246\Dwg\3.01–3.16.dwg Layout Name: 3.01

XREF LIST
Ltscale: 1
Resolved
TTLBLK
C246R500
C246R270
C246N036
C246R900
C246U630
T246X800
RCC II_BASE_TBP
C246G450
S246B190
S246Y220

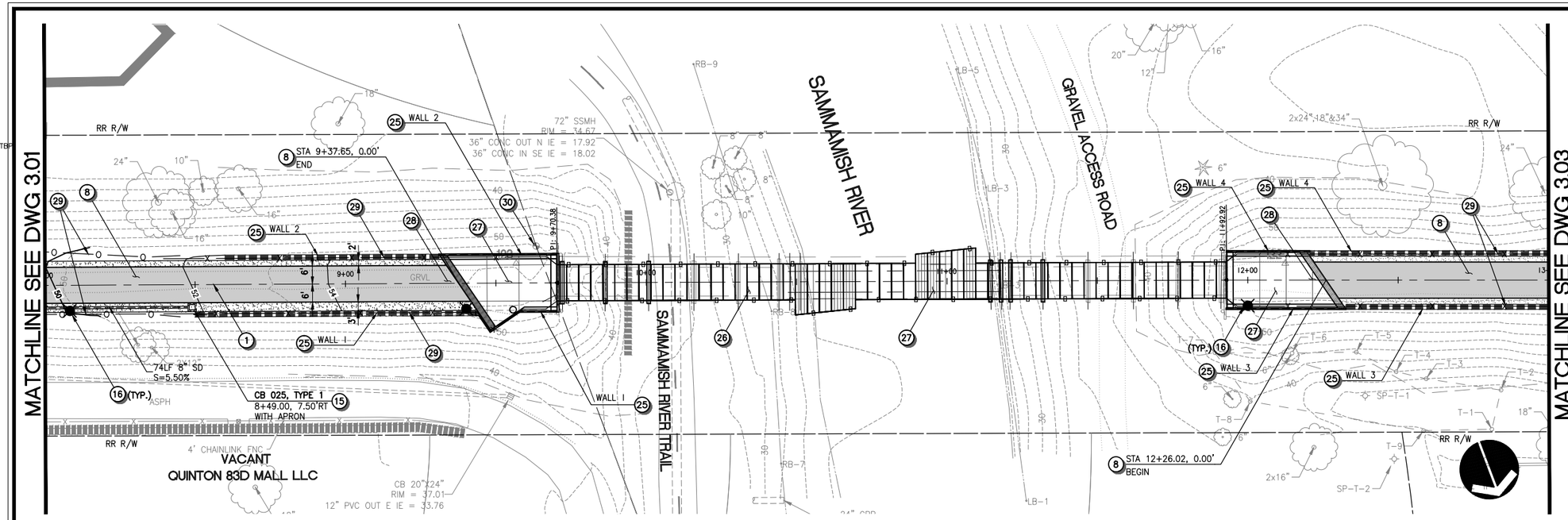

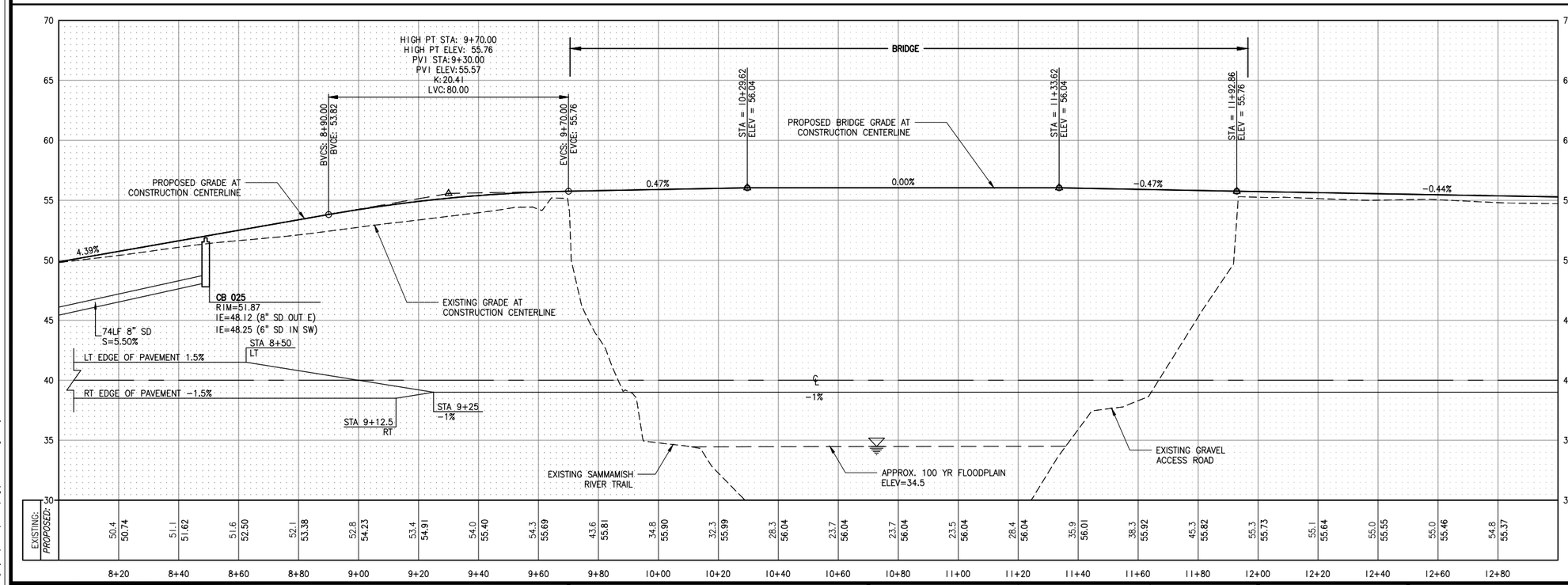

CONSTRUCTION NOTES

1. CONSTRUCTION CENTERLINE, SEE DWGS 1.03–1.04 FOR DETAILS.
2. INSTALL CEMENT CONCRETE CURB AND GUTTER TYPE "A" PER COR STD DETAIL NO. 304.
3. INSTALL CEMENT CONCRETE SIDEWALK PER COR STD DETAIL NO. 303.
4. INSTALL SIDEWALK RAMP, SEE DWGS 3.19–3.20 FOR LAYOUT.
5. RECONSTRUCT DRIVEWAY TO THE LIMITS SHOWN. SEE DWG 3.17 FOR PAVEMENT SECTION AND DWG 3.18 FOR PROFILE.
6. RECONSTRUCT ASPHALT PAVEMENT PER TYPICAL ROADWAY SECTION ON DWG 3.17, LIMITS PER PLAN.
7. INSTALL EXTRUDED CURB PER COR STD DETAIL NO. 304A.
8. CONSTRUCT HMA PAVEMENT TRAIL PER SECTION ON DWG 3.17.
9. CONSTRUCT POROUS PAVEMENT TRAIL PER SECTION ON DWG 3.17.
10. CONNECT TO EXISTING STORM DRAIN.
11. REPLACE EXISTING FRAME AND GRATE PER COR STD DETAIL NO. 631.
12. ADJUST EXISTING CATCH BASIN OR MANHOLE TO FINISHED GRADE. ROTATE GRATE OR COVER TO ALIGN WITH SCORING IF LOCATED WITHIN NEW CEMENT CONCRETE PAVING.
13. INSTALL PIPE INLET PROTECTION PER DETAIL ON DWG 3.22.
14. INSTALL PIPE OUTFALL PROTECTION PER DETAIL ON DWG 3.22.
15. INSTALL DRAINAGE STRUCTURE, TYPE AND SIZE PER PLAN. PROVIDE APRON PER DETAIL ON DWG 3.23 WHERE INDICATED.
16. LIGHT POLE, SEE ILLUMINATION PLANS (DWG 5.01–5.10) FOR DETAILS.
17. INSTALL VEGETATED DISPERSION STRIP PER DETAIL ON DWG 3.22.
18. REPLACE EXIST. CULVERT WITH NEW CULVERT PER DETAIL ON DWG 3.23.
19. INSTALL GRAVEL SHOULDER WITH INFILTRATION TRENCH PER DETAIL ON DWG 3.22.
20. EXISTING FEATURES OR STRUCTURE TO REMAIN, PROTECT DURING CONSTRUCTION.
21. EXISTING UTILITY TO REMAIN, PROTECT DURING CONSTRUCTION.
22. EXISTING UTILITY TO BE RELOCATED OR ADJUSTED TO FINISHED GRADE BY OTHERS.
23. ADJUST EXISTING UTILITY BOX TO FINISHED GRADE. REPLACE EXISTING LID WITH NON–SKID LID AND ROTATE TO ALIGN WITH SCORING IF LOCATED WITHIN NEW CEMENT CONCRETE PAVING.
24. REINSTALL SALVAGED BOLLARD PER COR STD DETAIL 911.
25. INSTALL RETAINING WALL PER DETAILS ON DWG 3.21.
26. SEE BRIDGE PLANS (DWG 4.01–4.13) FOR IMPROVEMENTS.
27. SEE HARDSCAPE/URBAN DESIGN PLANS (DWG 6.01–6.43) FOR DETAILS.
28. INSTALL BI–AXIAL GEOGRID AT PAVEMENT TRANSITIONS PER DETAIL ON DWG 3.18.
29. INSTALL SAFETY RAIL OR CHAINLINK FENCE PER HARDSCAPE/URBAN DESIGN PLANS (DWG 6.01–6.43).
30. REPLACE AND RESET EXISTING SURVEY BENCH MARK, SEE SPECIFICATIONS FOR REQUIREMENTS.
31. CONSTRUCT LANDSCAPE BERM WITH EXCESS MATERIAL EXCAVATED FROM SITE TO APPROX. SIZE AND HEIGHT AS SHOWN.
32. POTHOLE EXISTING UTILITY CROSSING AND NOTIFY THE ENGINEER IF CONFLICTS EXIST.

GENERAL NOTES

1. ALL DIMENSIONS AND STATION AND OFFSET REFERENCES ARE TO FACE OF CURB UNLESS NOTED OTHERWISE.

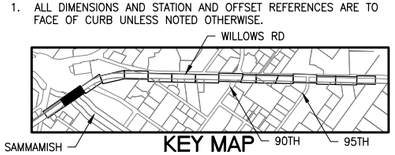

KEY MAP

VERT. SCALE: 5' 0' 5' 10' IN FEET

HORZ. SCALE: 20' 0' 20' 40' IN FEET

CALL BEFORE YOU DIG 1–800–424–5555

CityofRedmond WASHINGTON

CITY OF REDMOND
PUBLIC WORKS DEPARTMENT
15670 NE 85TH STREET – REDMOND, WA 98073–9710

Redmond Central Connector
Phase II
City Project No. 20021314
Federal Aid No. CM–1065(011)

otak
Hammi Global Partner
11241 Willows Road NE
Suite 200
Redmond, Washington 98052
Phone: (425) 822-4446
FAX: (425) 827-9577
www.otak.com

DESIGN ENGR.	DRAWN	CHECKED
TP/SW	AK/EW	NV/DS

NO.	REVISION COMMENTS	BY	REVIEW	DATE

NICO M. VANDERGRIFT
STATE OF WASHINGTON
30792
REGISTERED PROFESSIONAL ENGINEER
1/14/16

TRAIL AND DRAINAGE PLAN AND PROFILE

January 2016

PROJECT NO. OTAK 32246
SHEET: 15 OF: 111
DRAWING NO. 3.02

Plotted: Jan 14, 2016 – 9:32am touta K:\project\32200\32246\Dwg\3.01-3.16.dwg Layout Name: 3.02

XREF LIST
Ltscale: 1
Resolved
TTLBLK
C246R500
C246R270
C246N036
C246R900
C246U630
T246X800
RCC II_BASE_TBP
C246G450
S246B190
S246Y220

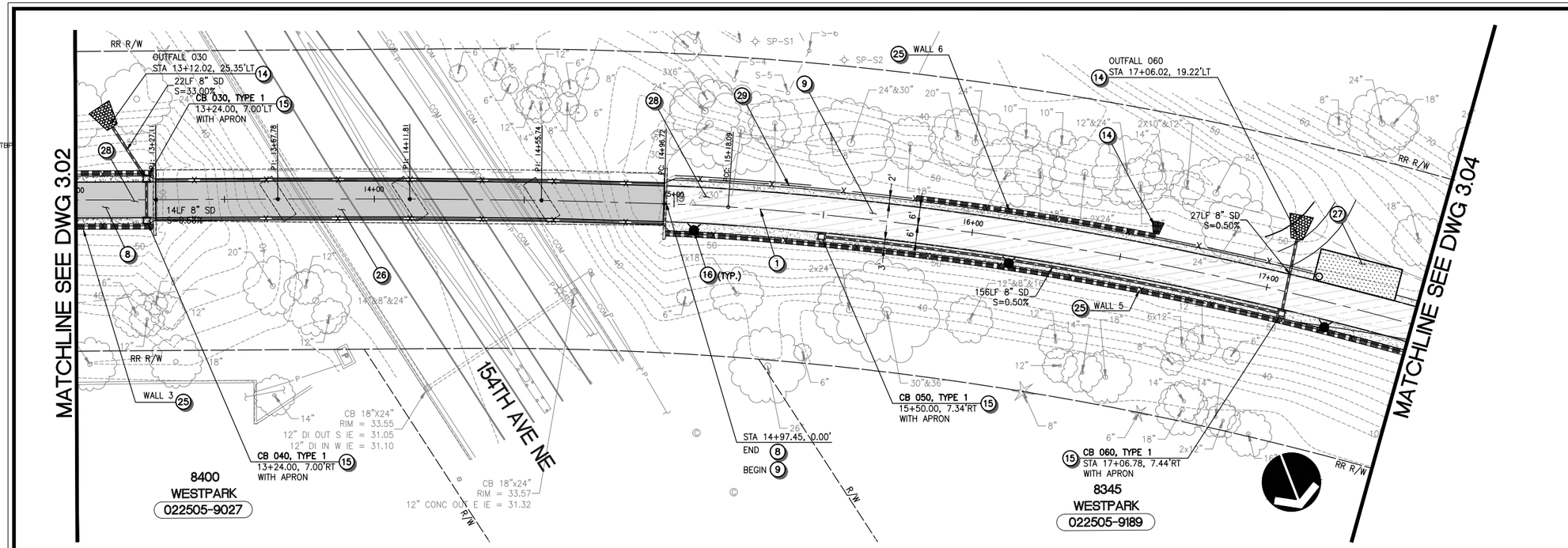

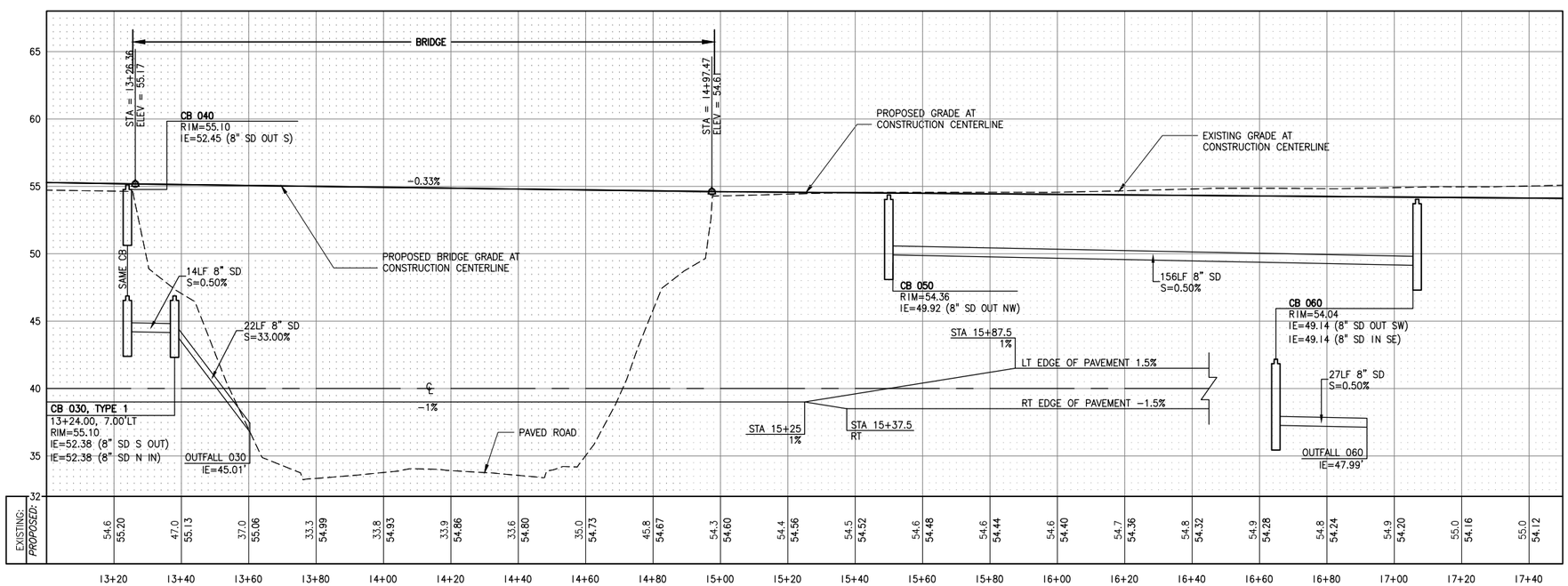

CONSTRUCTION NOTES

1. CONSTRUCTION CENTERLINE, SEE DWGS 1.03–1.04 FOR DETAILS.
2. INSTALL CEMENT CONCRETE CURB AND GUTTER TYPE "A" PER COR STD DETAIL NO. 304.
3. INSTALL CEMENT CONCRETE SIDEWALK PER COR STD DETAIL NO. 303.
4. INSTALL SIDEWALK RAMP, SEE DWGS 3.19–3.20 FOR LAYOUT.
5. RECONSTRUCT DRIVEWAY TO THE LIMITS SHOWN. SEE DWG 3.17 FOR PAVEMENT SECTION AND DWG 3.18 FOR PROFILE.
6. RECONSTRUCT ASPHALT PAVEMENT PER TYPICAL ROADWAY SECTION ON DWG 3.17, LIMITS PER PLAN.
7. INSTALL EXTRUDED CURB PER COR STD DETAIL NO. 304A.
8. CONSTRUCT HMA PAVEMENT TRAIL PER SECTION ON DWG 3.17.
9. CONSTRUCT POROUS PAVEMENT TRAIL PER SECTION ON DWG 3.17.
10. CONNECT TO EXISTING STORM DRAIN.
11. REPLACE EXISTING FRAME AND GRATE PER COR STD DETAIL NO. 631.
12. ADJUST EXISTING CATCH BASIN OR MANHOLE TO FINISHED GRADE. ROTATE GRATE OR COVER TO ALIGN WITH SCORING IF LOCATED WITHIN NEW CEMENT CONCRETE PAVING.
13. INSTALL PIPE INLET PROTECTION PER DETAIL ON DWG 3.22.
14. INSTALL PIPE OUTFALL PROTECTION PER DETAIL ON DWG 3.22.
15. INSTALL DRAINAGE STRUCTURE, TYPE AND SIZE PER PLAN. PROVIDE APRON PER DETAIL ON DWG 3.23 WHERE INDICATED.
16. LIGHT POLE, SEE ILLUMINATION PLANS (DWG 5.01–5.10) FOR DETAILS.
17. INSTALL VEGETATED DISPERSION STRIP PER DETAIL ON DWG 3.22.
18. REPLACE EXIST. CULVERT WITH NEW CULVERT PER DETAIL ON DWG 3.23.
19. INSTALL GRAVEL SHOULDER WITH INFILTRATION TRENCH PER DETAIL ON DWG 3.22.
20. EXISTING FEATURES OR STRUCTURE TO REMAIN, PROTECT DURING CONSTRUCTION.
21. EXISTING UTILITY TO REMAIN, PROTECT DURING CONSTRUCTION.
22. EXISTING UTILITY TO BE RELOCATED OR ADJUSTED TO FINISHED GRADE BY OTHERS.
23. ADJUST EXISTING UTILITY BOX TO FINISHED GRADE. REPLACE EXISTING LID WITH NON–SKID LID AND ROTATE TO ALIGN WITH SCORING IF LOCATED WITHIN NEW CEMENT CONCRETE PAVING.
24. REINSTALL SALVAGED BOLLARD PER COR STD DETAIL 911.
25. INSTALL RETAINING WALL PER DETAILS ON DWG 3.21.
26. SEE BRIDGE PLANS (DWG 4.01–4.13) FOR IMPROVEMENTS.
27. SEE HARDSCAPE/URBAN DESIGN PLANS (DWG 6.01–6.43) FOR DETAILS.
28. INSTALL BI–AXIAL GEOGRID AT PAVEMENT TRANSITIONS PER DETAIL ON DWG 3.18.
29. INSTALL SAFETY RAIL OR CHAINLINK FENCE PER HARDSCAPE/URBAN DESIGN PLANS (DWG 6.01–6.43).
30. REPLACE AND RESET EXISTING SURVEY BENCH MARK, SEE SPECIFICATIONS FOR REQUIREMENTS.
31. CONSTRUCT LANDSCAPE BERM WITH EXCESS MATERIAL EXCAVATED FROM SITE TO APPROX. SIZE AND HEIGHT AS SHOWN.
32. POTHOLE EXISTING UTILITY CROSSING AND NOTIFY THE ENGINEER IF CONFLICTS EXIST.

GENERAL NOTES

1. ALL DIMENSIONS AND STATION AND OFFSET REFERENCES ARE TO FACE OF CURB UNLESS NOTED OTHERWISE.

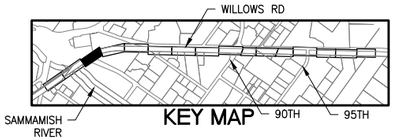

VERT. SCALE 5' 0' 5' 10' IN FEET

HORZ. SCALE 20' 0' 20' 40' IN FEET

CALL BEFORE YOU DIG 1–800–424–5555

CityofRedmond WASHINGTON

CITY OF REDMOND
PUBLIC WORKS DEPARTMENT
15670 NE 85TH STREET – REDMOND, WA 98073–9710

Redmond Central Connector
Phase II
City Project No. 20021314
Federal Aid No. CM–1065(011)

otak
HammGlobal Partner
11241 Willows Road NE
Suite 200
Redmond, Washington 98052
Phone: (425) 822–4446
FAX: (425) 827–9577
www.otak.com

DESIGN ENGR.	DRAWN	CHECKED
TP/SW	AK/EW	NV/DS

NO.	REVISION COMMENTS	BY	REVIEW	DATE

NICO M. VANDERGRAFT
STATE OF WASHINGTON
30792
REGISTERED PROFESSIONAL ENGINEER
1/14/16

TRAIL AND DRAINAGE PLAN AND PROFILE

January 2016

PROJECT NO.
OTAK 32246

SHEET: 16 OF: 111

DRAWING NO.
3.03

Plotted: Jan 14, 2016 – 9:32am touta K:\project\32200\32246\Dwg\3.01–3.16.dwg Layout Name: 3.03

XREF LIST
Ltscale: 1
Resolved
TTLBLK
C246R500
C246R270
C246N036
C246R900
C246U630
T246X800
RCC II_BASE_TBP
C246G450
S246B190
S246Y220

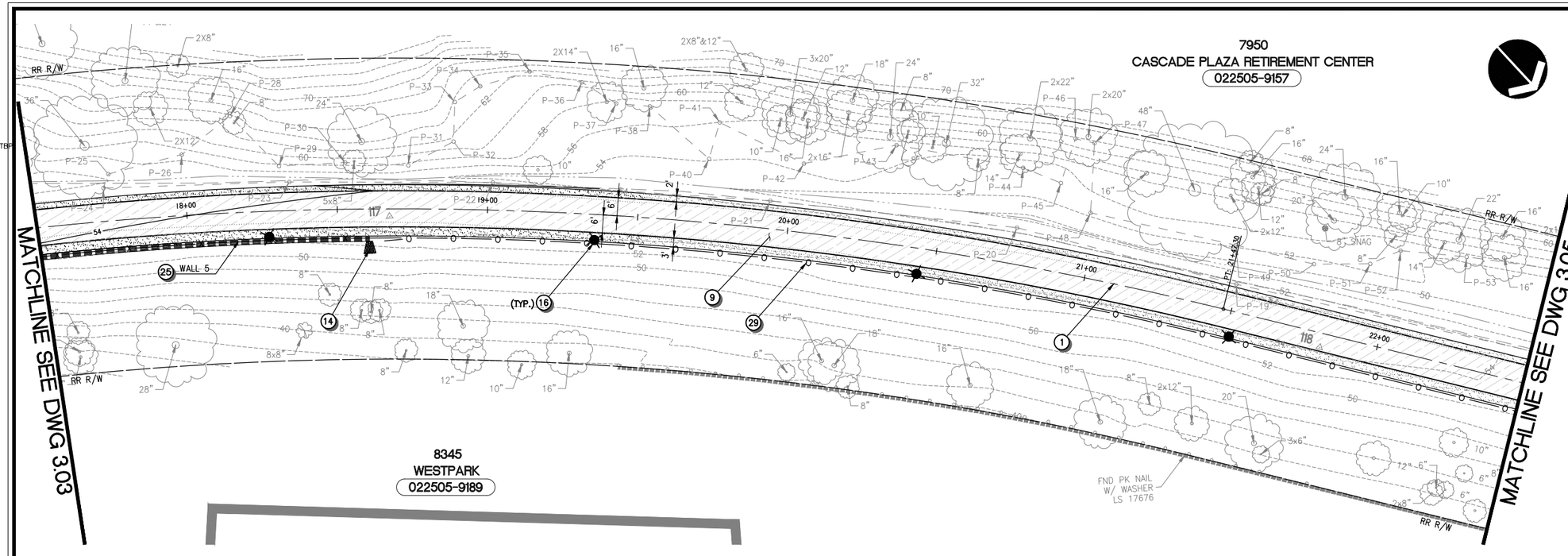

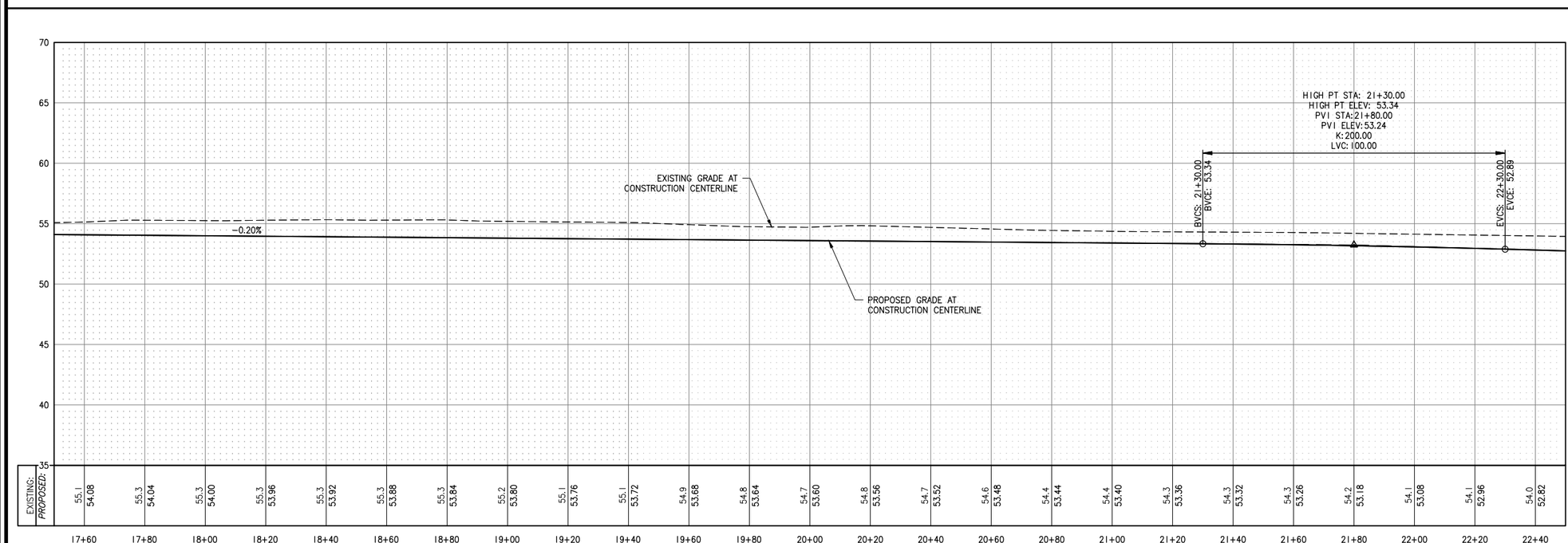

CONSTRUCTION NOTES

1. CONSTRUCTION CENTERLINE, SEE DWGS 1.03–1.04 FOR DETAILS.
2. INSTALL CEMENT CONCRETE CURB AND GUTTER TYPE "A" PER COR STD DETAIL NO. 304.
3. INSTALL CEMENT CONCRETE SIDEWALK PER COR STD DETAIL NO. 303.
4. INSTALL SIDEWALK RAMP, SEE DWGS 3.19–3.20 FOR LAYOUT.
5. RECONSTRUCT DRIVEWAY TO THE LIMITS SHOWN. SEE DWG 3.17 FOR PAVEMENT SECTION AND DWG 3.18 FOR PROFILE.
6. RECONSTRUCT ASPHALT PAVEMENT PER TYPICAL ROADWAY SECTION ON DWG 3.17, LIMITS PER PLAN.
7. INSTALL EXTRUDED CURB PER COR STD DETAIL NO. 304A.
8. CONSTRUCT HMA PAVEMENT TRAIL PER SECTION ON DWG 3.17.
9. CONSTRUCT POROUS PAVEMENT TRAIL PER SECTION ON DWG 3.17.
10. CONNECT TO EXISTING STORM DRAIN.
11. REPLACE EXISTING FRAME AND GRATE PER COR STD DETAIL NO. 631.
12. ADJUST EXISTING CATCH BASIN OR MANHOLE TO FINISHED GRADE. ROTATE GRATE OR COVER TO ALIGN WITH SCORING IF LOCATED WITHIN NEW CEMENT CONCRETE PAVING.
13. INSTALL PIPE INLET PROTECTION PER DETAIL ON DWG 3.22.
14. INSTALL PIPE OUTFALL PROTECTION PER DETAIL ON DWG 3.22.
15. INSTALL DRAINAGE STRUCTURE, TYPE AND SIZE PER PLAN. PROVIDE APRON PER DETAIL ON DWG 3.23 WHERE INDICATED.
16. LIGHT POLE, SEE ILLUMINATION PLANS (DWG 5.01–5.10) FOR DETAILS.
17. INSTALL VEGETATED DISPERSION STRIP PER DETAIL ON DWG 3.22.
18. REPLACE EXIST. CULVERT WITH NEW CULVERT PER DETAIL ON DWG 3.23.
19. INSTALL GRAVEL SHOULDER WITH INFILTRATION TRENCH PER DETAIL ON DWG 3.22.
20. EXISTING FEATURES OR STRUCTURE TO REMAIN, PROTECT DURING CONSTRUCTION.
21. EXISTING UTILITY TO REMAIN, PROTECT DURING CONSTRUCTION.
22. EXISTING UTILITY TO BE RELOCATED OR ADJUSTED TO FINISHED GRADE BY OTHERS.
23. ADJUST EXISTING UTILITY BOX TO FINISHED GRADE. REPLACE EXISTING LID WITH NON–SKID LID AND ROTATE TO ALIGN WITH SCORING IF LOCATED WITHIN NEW CEMENT CONCRETE PAVING.
24. REINSTALL SALVAGED BOLLARD PER COR STD DETAIL 911.
25. INSTALL RETAINING WALL PER DETAILS ON DWG 3.21.
26. SEE BRIDGE PLANS (DWG 4.01–4.13) FOR IMPROVEMENTS.
27. SEE HARDSCAPE/URBAN DESIGN PLANS (DWG 6.01–6.43) FOR DETAILS.
28. INSTALL BI–AXIAL GEOGRID AT PAVEMENT TRANSITIONS PER DETAIL ON DWG 3.18.
29. INSTALL SAFETY RAIL OR CHAINLINK FENCE PER HARDSCAPE/URBAN DESIGN PLANS (DWG 6.01–6.43).
30. REPLACE AND RESET EXISTING SURVEY BENCH MARK, SEE SPECIFICATIONS FOR REQUIREMENTS.
31. CONSTRUCT LANDSCAPE BERM WITH EXCESS MATERIAL EXCAVATED FROM SITE TO APPROX. SIZE AND HEIGHT AS SHOWN.
32. POTHOLE EXISTING UTILITY CROSSING AND NOTIFY THE ENGINEER IF CONFLICTS EXIST.

GENERAL NOTES

1. ALL DIMENSIONS AND STATION AND OFFSET REFERENCES ARE TO FACE OF CURB UNLESS NOTED OTHERWISE.

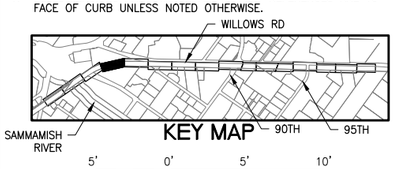

KEY MAP

VERT. SCALE 5' 0' 5' 10' IN FEET

HORZ. SCALE 20' 0' 20' 40' IN FEET

CALL BEFORE YOU DIG 1–800–424–5555

CityofRedmond WASHINGTON

CITY OF REDMOND
PUBLIC WORKS DEPARTMENT
15670 NE 85TH STREET – REDMOND, WA 98073–9710

Redmond Central Connector
Phase II
City Project No. 20021314
Federal Aid No. CM–1065(011)

otak
HammGlobal Partner
11241 Willows Road NE
Suite 200
Redmond, Washington 98052
Phone: (425) 822–4446
FAX: (425) 827–9577
www.otak.com

DESIGN ENGR.	DRAWN	CHECKED
TP/SW	AK/EW	NV/DS

NO.	REVISION COMMENTS	BY	REVIEW	DATE

NICO M. VANDERGRAFT
STATE OF WASHINGTON
30793
REGISTERED PROFESSIONAL ENGINEER
1/14/16

TRAIL AND DRAINAGE PLAN AND PROFILE

January 2016

PROJECT NO. OTAK 32246
SHEET: 17 OF: 111
DRAWING NO. 3.04

Plotted: Jan 14, 2016 – 9:32am touta K:\project\32200\32246\Dwg\3.01–3.16.dwg Layout Name: 3.04

XREF LIST
Ltscale: 1
Resolved
TTLBLK
C246R500
C246R270
C246N036
C246R900
C246U630
T246X800
RCC II_BASE_TBP
C246G450
S246B190
S246Y220

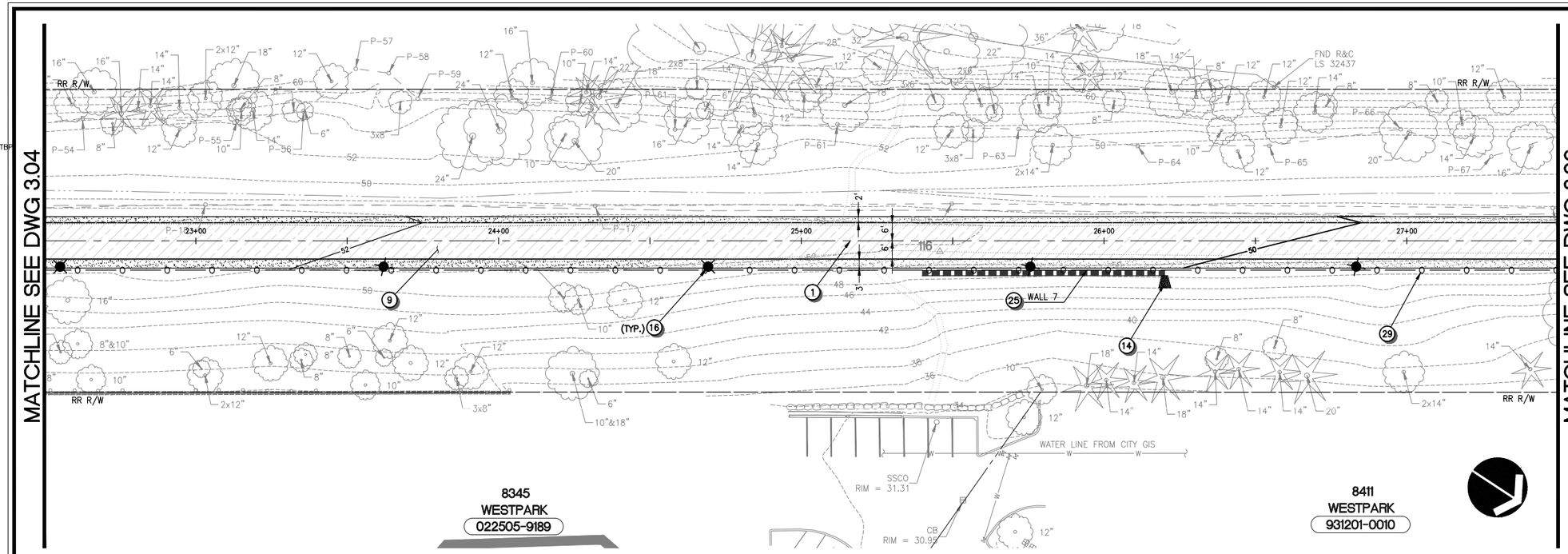

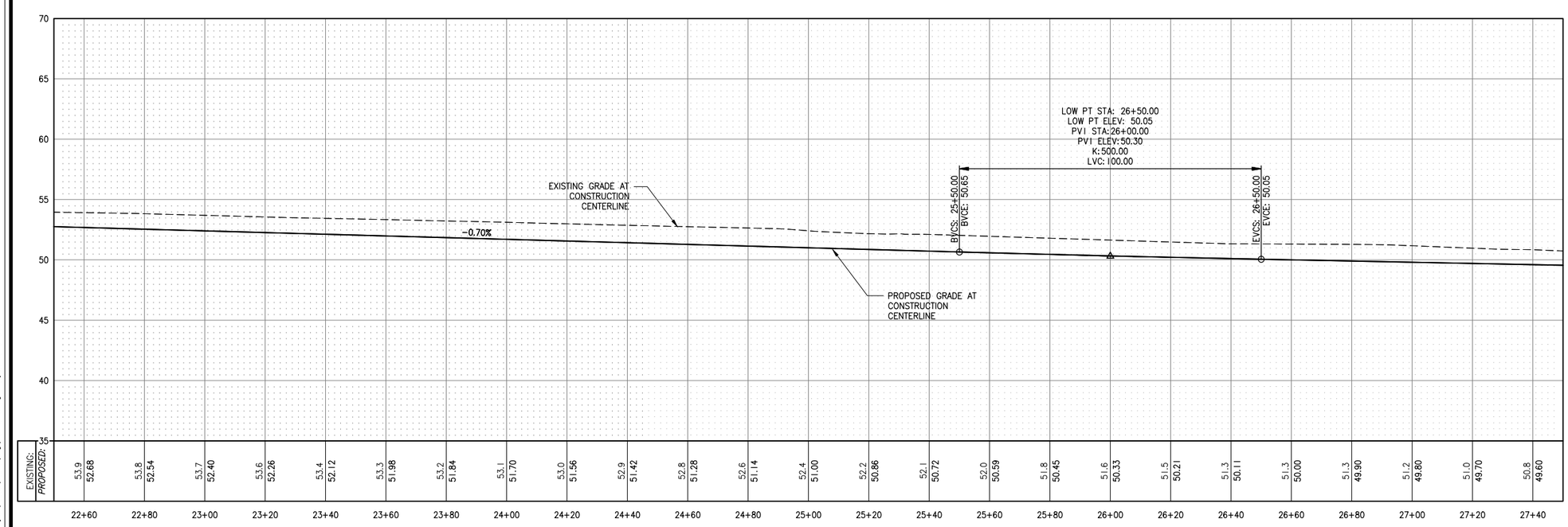

CONSTRUCTION NOTES

1. CONSTRUCTION CENTERLINE, SEE DWGS 1.03–1.04 FOR DETAILS.
2. INSTALL CEMENT CONCRETE CURB AND GUTTER TYPE "A" PER COR STD DETAIL NO. 304.
3. INSTALL CEMENT CONCRETE SIDEWALK PER COR STD DETAIL NO. 303.
4. INSTALL SIDEWALK RAMP, SEE DWGS 3.19–3.20 FOR LAYOUT.
5. RECONSTRUCT DRIVEWAY TO THE LIMITS SHOWN. SEE DWG 3.17 FOR PAVEMENT SECTION AND DWG 3.18 FOR PROFILE.
6. RECONSTRUCT ASPHALT PAVEMENT PER TYPICAL ROADWAY SECTION ON DWG 3.17, LIMITS PER PLAN.
7. INSTALL EXTRUDED CURB PER COR STD DETAIL NO. 304A.
8. CONSTRUCT HMA PAVEMENT TRAIL PER SECTION ON DWG 3.17.
9. CONSTRUCT POROUS PAVEMENT TRAIL PER SECTION ON DWG 3.17.
10. CONNECT TO EXISTING STORM DRAIN.
11. REPLACE EXISTING FRAME AND GRATE PER COR STD DETAIL NO. 631.
12. ADJUST EXISTING CATCH BASIN OR MANHOLE TO FINISHED GRADE. ROTATE GRATE OR COVER TO ALIGN WITH SCORING IF LOCATED WITHIN NEW CEMENT CONCRETE PAVING.
13. INSTALL PIPE INLET PROTECTION PER DETAIL ON DWG 3.22.
14. INSTALL PIPE OUTFALL PROTECTION PER DETAIL ON DWG 3.22.
15. INSTALL DRAINAGE STRUCTURE, TYPE AND SIZE PER PLAN. PROVIDE APRON PER DETAIL ON DWG 3.23 WHERE INDICATED.
16. LIGHT POLE, SEE ILLUMINATION PLANS (DWG 5.01–5.10) FOR DETAILS.
17. INSTALL VEGETATED DISPERSION STRIP PER DETAIL ON DWG 3.22.
18. REPLACE EXIST. CULVERT WITH NEW CULVERT PER DETAIL ON DWG 3.23.
19. INSTALL GRAVEL SHOULDER WITH INFILTRATION TRENCH PER DETAIL ON DWG 3.22.
20. EXISTING FEATURES OR STRUCTURE TO REMAIN, PROTECT DURING CONSTRUCTION.
21. EXISTING UTILITY TO REMAIN, PROTECT DURING CONSTRUCTION.
22. EXISTING UTILITY TO BE RELOCATED OR ADJUSTED TO FINISHED GRADE BY OTHERS.
23. ADJUST EXISTING UTILITY BOX TO FINISHED GRADE. REPLACE EXISTING LID WITH NON-SKID LID AND ROTATE TO ALIGN WITH SCORING IF LOCATED WITHIN NEW CEMENT CONCRETE PAVING.
24. REINSTALL SALVAGED BOLLARD PER COR STD DETAIL 911.
25. INSTALL RETAINING WALL PER DETAILS ON DWG 3.21.
26. SEE BRIDGE PLANS (DWG 4.01–4.13) FOR IMPROVEMENTS.
27. SEE HARDSCAPE/URBAN DESIGN PLANS (DWG 6.01–6.43) FOR DETAILS.
28. INSTALL BI-AXIAL GEOGRID AT PAVEMENT TRANSITIONS PER DETAIL ON DWG 3.18.
29. INSTALL SAFETY RAIL OR CHAINLINK FENCE PER HARDSCAPE/URBAN DESIGN PLANS (DWG 6.01–6.43).
30. REPLACE AND RESET EXISTING SURVEY BENCH MARK, SEE SPECIFICATIONS FOR REQUIREMENTS.
31. CONSTRUCT LANDSCAPE BERM WITH EXCESS MATERIAL EXCAVATED FROM SITE TO APPROX. SIZE AND HEIGHT AS SHOWN.
32. POTHOLE EXISTING UTILITY CROSSING AND NOTIFY THE ENGINEER IF CONFLICTS EXIST.

GENERAL NOTES

1. ALL DIMENSIONS AND STATION AND OFFSET REFERENCES ARE TO FACE OF CURB UNLESS NOTED OTHERWISE.

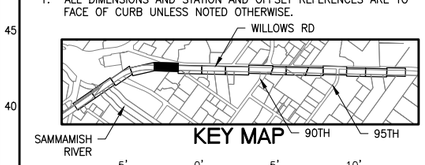

VERT. SCALE 5' 0' 5' 10' IN FEET

HORZ. SCALE 20' 0' 20' 40' IN FEET

CALL BEFORE YOU DIG 1-800-424-5555

CityofRedmond WASHINGTON

CITY OF REDMOND
PUBLIC WORKS DEPARTMENT
15670 NE 85TH STREET – REDMOND, WA 98073-9710

Redmond Central Connector
Phase II
City Project No. 20021314
Federal Aid No. CM-1065(011)

otak
Hammi Global Partner
11241 Willows Road NE
Suite 200
Redmond, Washington 98052
Phone: (425) 822-4446
FAX: (425) 827-9577
www.otak.com

DESIGN ENGR.	DRAWN	CHECKED
TP/SW	AK/EW	NV/DS

NO.	REVISION COMMENTS	BY	REVIEW	DATE

NICO M. VANDERGRAFT, STATE OF WASHINGTON, 30792, REGISTERED PROFESSIONAL ENGINEER
1/14/16

TRAIL AND DRAINAGE
PLAN AND PROFILE

January 2016

PROJECT NO. OTAK 32246
SHEET: 18 OF: 111
DRAWING NO. 3.05

Plotted: Jan 14, 2016 – 9:33am touta K:\project\32200\32246\Dwg\3.01-3.16.dwg Layout Name: 3.05

XREF LIST
Ltscale: 1
Resolved
TTLBLK
C246R500
C246R270
C246N036
C246R900
C246U630
T246X800
RCC II_BASE_TBP
C246G450
S246B190
S246Y220

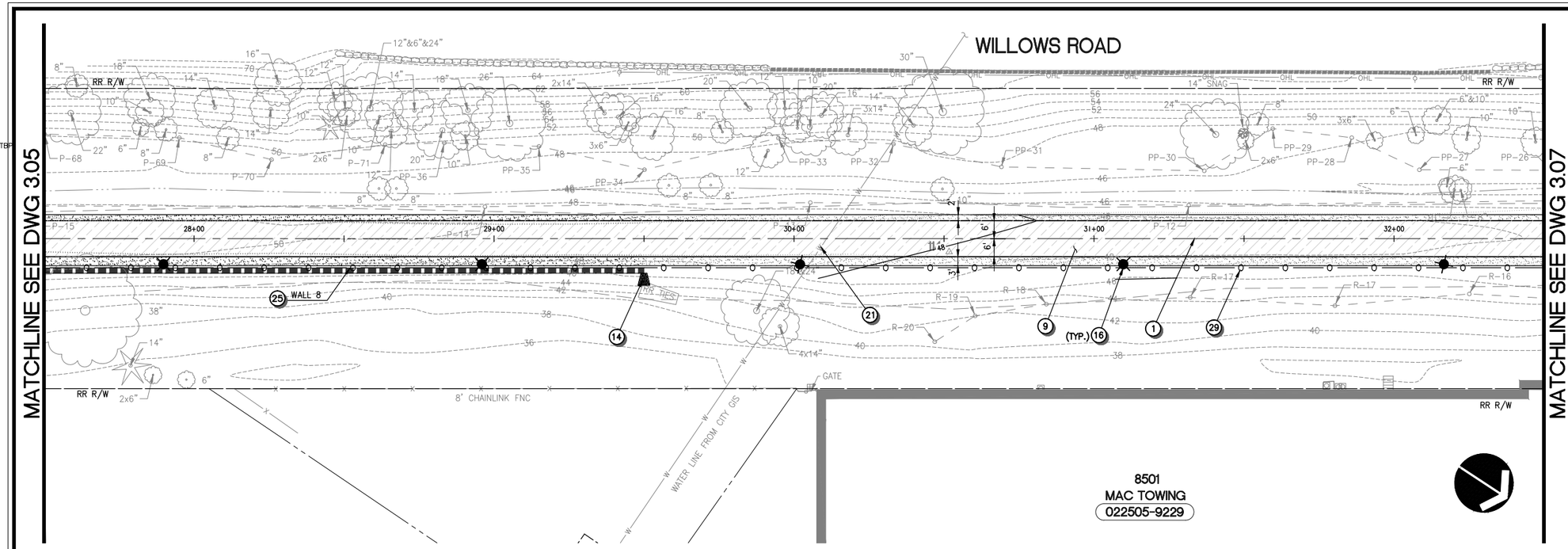

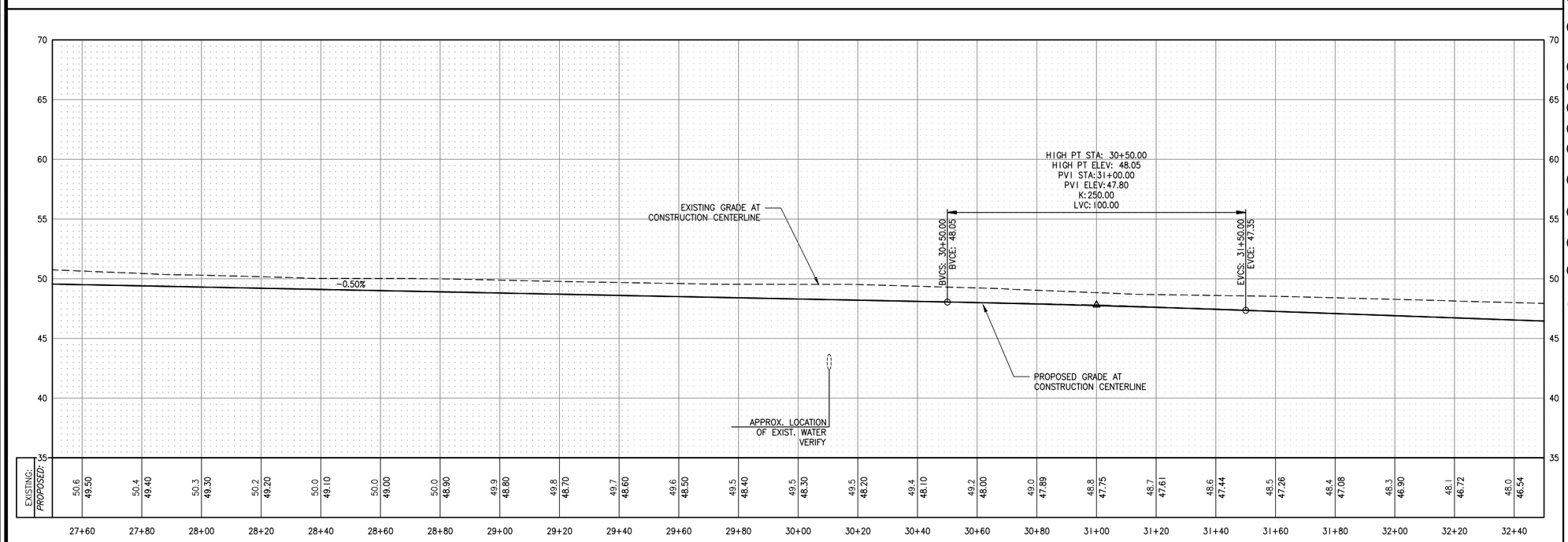

CONSTRUCTION NOTES

1. CONSTRUCTION CENTERLINE, SEE DWGS 1.03–1.04 FOR DETAILS.
2. INSTALL CEMENT CONCRETE CURB AND GUTTER TYPE "A" PER COR STD DETAIL NO. 304.
3. INSTALL CEMENT CONCRETE SIDEWALK PER COR STD DETAIL NO. 303.
4. INSTALL SIDEWALK RAMP, SEE DWGS 3.19–3.20 FOR LAYOUT.
5. RECONSTRUCT DRIVEWAY TO THE LIMITS SHOWN. SEE DWG 3.17 FOR PAVEMENT SECTION AND DWG 3.18 FOR PROFILE.
6. RECONSTRUCT ASPHALT PAVEMENT PER TYPICAL ROADWAY SECTION ON DWG 3.17, LIMITS PER PLAN.
7. INSTALL EXTRUDED CURB PER COR STD DETAIL NO. 304A.
8. CONSTRUCT HMA PAVEMENT TRAIL PER SECTION ON DWG 3.17.
9. CONSTRUCT POROUS PAVEMENT TRAIL PER SECTION ON DWG 3.17.
10. CONNECT TO EXISTING STORM DRAIN.
11. REPLACE EXISTING FRAME AND GRATE PER COR STD DETAIL NO. 631.
12. ADJUST EXISTING CATCH BASIN OR MANHOLE TO FINISHED GRADE. ROTATE GRATE OR COVER TO ALIGN WITH SCORING IF LOCATED WITHIN NEW CEMENT CONCRETE PAVING.
13. INSTALL PIPE INLET PROTECTION PER DETAIL ON DWG 3.22.
14. INSTALL PIPE OUTFALL PROTECTION PER DETAIL ON DWG 3.22.
15. INSTALL DRAINAGE STRUCTURE, TYPE AND SIZE PER PLAN. PROVIDE APRON PER DETAIL ON DWG 3.23 WHERE INDICATED.
16. LIGHT POLE, SEE ILLUMINATION PLANS (DWG 5.01–5.10) FOR DETAILS.
17. INSTALL VEGETATED DISPERSION STRIP PER DETAIL ON DWG 3.22.
18. REPLACE EXIST. CULVERT WITH NEW CULVERT PER DETAIL ON DWG 3.23.
19. INSTALL GRAVEL SHOULDER WITH INFILTRATION TRENCH PER DETAIL ON DWG 3.22.
20. EXISTING FEATURES OR STRUCTURE TO REMAIN, PROTECT DURING CONSTRUCTION.
21. EXISTING UTILITY TO REMAIN, PROTECT DURING CONSTRUCTION.
22. EXISTING UTILITY TO BE RELOCATED OR ADJUSTED TO FINISHED GRADE BY OTHERS.
23. ADJUST EXISTING UTILITY BOX TO FINISHED GRADE. REPLACE EXISTING LID WITH NON–SKID LID AND ROTATE TO ALIGN WITH SCORING IF LOCATED WITHIN NEW CEMENT CONCRETE PAVING.
24. REINSTALL SALVAGED BOLLARD PER COR STD DETAIL 911.
25. INSTALL RETAINING WALL PER DETAILS ON DWG 3.21.
26. SEE BRIDGE PLANS (DWG 4.01–4.13) FOR IMPROVEMENTS.
27. SEE HARDSCAPE/URBAN DESIGN PLANS (DWG 6.01–6.43) FOR DETAILS.
28. INSTALL BI–AXIAL GEOGRID AT PAVEMENT TRANSITIONS PER DETAIL ON DWG 3.18.
29. INSTALL SAFETY RAIL OR CHAINLINK FENCE PER HARDSCAPE/URBAN DESIGN PLANS (DWG 6.01–6.43).
30. REPLACE AND RESET EXISTING SURVEY BENCH MARK, SEE SPECIFICATIONS FOR REQUIREMENTS.
31. CONSTRUCT LANDSCAPE BERM WITH EXCESS MATERIAL EXCAVATED FROM SITE TO APPROX. SIZE AND HEIGHT AS SHOWN.
32. POTHOLE EXISTING UTILITY CROSSING AND NOTIFY THE ENGINEER IF CONFLICTS EXIST.

GENERAL NOTES

1. ALL DIMENSIONS AND STATION AND OFFSET REFERENCES ARE TO FACE OF CURB UNLESS NOTED OTHERWISE.

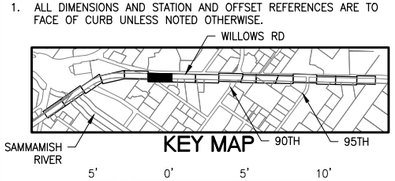

KEY MAP

VERT. SCALE 5' 0' 5' 10' IN FEET

HORZ. SCALE 20' 0' 20' 40' IN FEET

CALL BEFORE YOU DIG 1–800–424–5555

City of Redmond WASHINGTON

CITY OF REDMOND
PUBLIC WORKS DEPARTMENT
15670 NE 85TH STREET – REDMOND, WA 98073–9710

Redmond Central Connector
Phase II
City Project No. 20021314
Federal Aid No. CM–1065(011)

otak
Hammi Global Partner
11241 Willows Road NE
Suite 200
Redmond, Washington 98052
Phone: (425) 822–4446
FAX: (425) 827–9577
www.otak.com

DESIGN ENGR.	DRAWN	CHECKED
TP/SW	AK/EW	NV/DS

NO.	REVISION COMMENTS	BY	REVIEW	DATE

NICO M. VANDERGRAFT
STATE OF WASHINGTON
30792
REGISTERED PROFESSIONAL ENGINEER
1/14/16

TRAIL AND DRAINAGE
PLAN AND PROFILE

January 2016

PROJECT NO.
OTAK 32246

SHEET: 19 OF: 111

DRAWING NO.
3.06

Plotted: Jan 14, 2016 – 9:33am touta K:\project\32200\32246\Dwg\3.01–3.16.dwg Layout Name: 3.06

XREF LIST
Ltscale: 1
Resolved
TTLBLK
C246R500
C246R270
C246N036
C246R900
C246U630
T246X800
RCC II_BASE_TBP
C246G450
S246B190
S246Y220

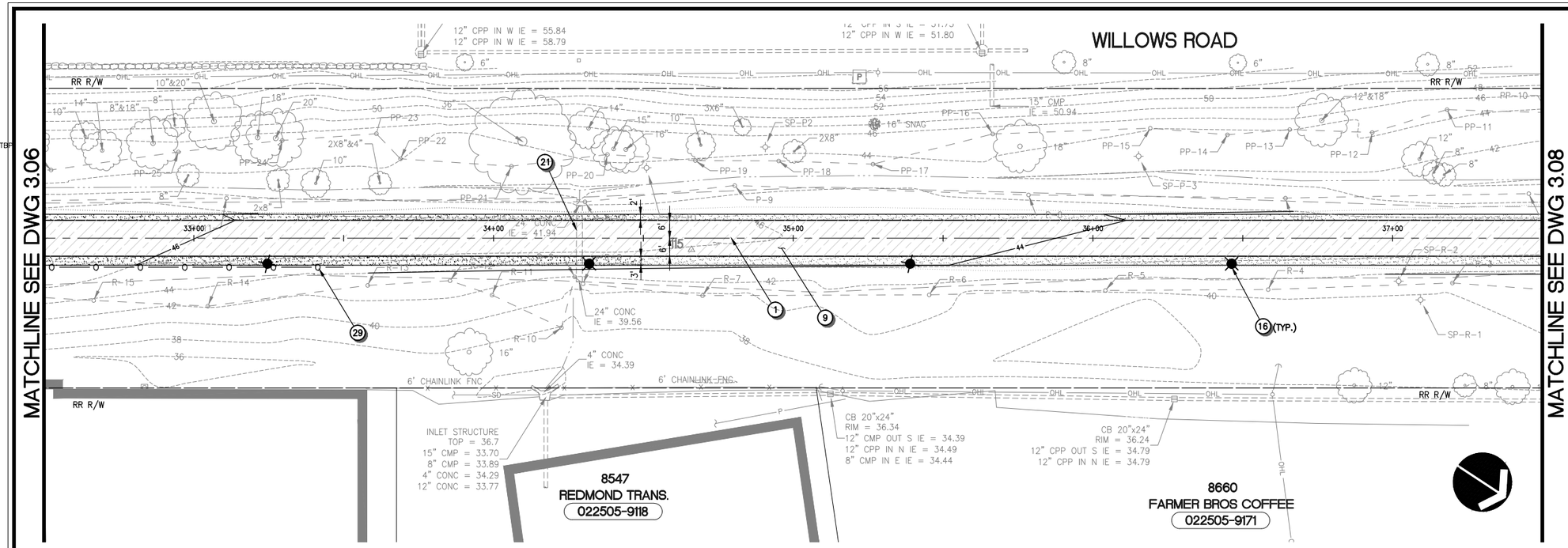

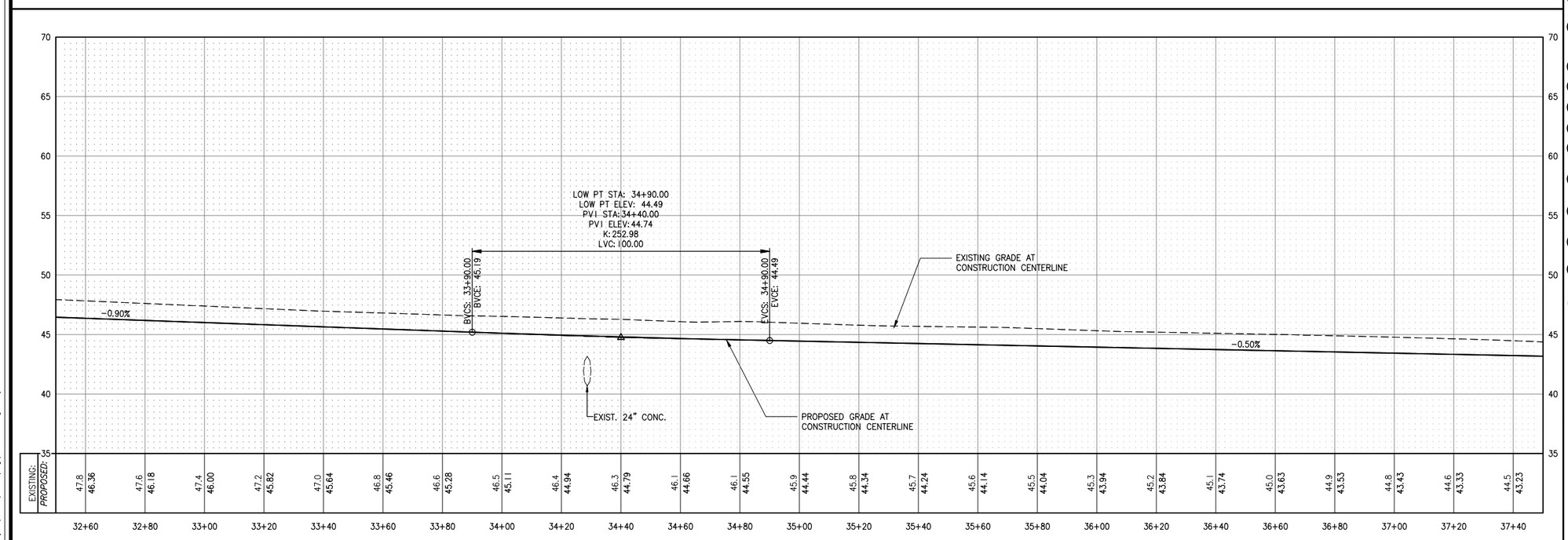

CONSTRUCTION NOTES

1. CONSTRUCTION CENTERLINE, SEE DWGS 1.03–1.04 FOR DETAILS.
2. INSTALL CEMENT CONCRETE CURB AND GUTTER TYPE "A" PER COR STD DETAIL NO. 304.
3. INSTALL CEMENT CONCRETE SIDEWALK PER COR STD DETAIL NO. 303.
4. INSTALL SIDEWALK RAMP, SEE DWGS 3.19–3.20 FOR LAYOUT.
5. RECONSTRUCT DRIVEWAY TO THE LIMITS SHOWN. SEE DWG 3.17 FOR PAVEMENT SECTION AND DWG 3.18 FOR PROFILE.
6. RECONSTRUCT ASPHALT PAVEMENT PER TYPICAL ROADWAY SECTION ON DWG 3.17, LIMITS PER PLAN.
7. INSTALL EXTRUDED CURB PER COR STD DETAIL NO. 304A.
8. CONSTRUCT HMA PAVEMENT TRAIL PER SECTION ON DWG 3.17.
9. CONSTRUCT POROUS PAVEMENT TRAIL PER SECTION ON DWG 3.17.
10. CONNECT TO EXISTING STORM DRAIN.
11. REPLACE EXISTING FRAME AND GRATE PER COR STD DETAIL NO. 631.
12. ADJUST EXISTING CATCH BASIN OR MANHOLE TO FINISHED GRADE. ROTATE GRATE OR COVER TO ALIGN WITH SCORING IF LOCATED WITHIN NEW CEMENT CONCRETE PAVING.
13. INSTALL PIPE INLET PROTECTION PER DETAIL ON DWG 3.22.
14. INSTALL PIPE OUTFALL PROTECTION PER DETAIL ON DWG 3.22.
15. INSTALL DRAINAGE STRUCTURE, TYPE AND SIZE PER PLAN. PROVIDE APRON PER DETAIL ON DWG 3.23 WHERE INDICATED.
16. LIGHT POLE, SEE ILLUMINATION PLANS (DWG 5.01–5.10) FOR DETAILS.
17. INSTALL VEGETATED DISPERSION STRIP PER DETAIL ON DWG 3.22.
18. REPLACE EXIST. CULVERT WITH NEW CULVERT PER DETAIL ON DWG 3.23.
19. INSTALL GRAVEL SHOULDER WITH INFILTRATION TRENCH PER DETAIL ON DWG 3.22.
20. EXISTING FEATURES OR STRUCTURE TO REMAIN, PROTECT DURING CONSTRUCTION.
21. EXISTING UTILITY TO REMAIN, PROTECT DURING CONSTRUCTION.
22. EXISTING UTILITY TO BE RELOCATED OR ADJUSTED TO FINISHED GRADE BY OTHERS.
23. ADJUST EXISTING UTILITY BOX TO FINISHED GRADE. REPLACE EXISTING LID WITH NON–SKID LID AND ROTATE TO ALIGN WITH SCORING IF LOCATED WITHIN NEW CEMENT CONCRETE PAVING.
24. REINSTALL SALVAGED BOLLARD PER COR STD DETAIL 911.
25. INSTALL RETAINING WALL PER DETAILS ON DWG 3.21.
26. SEE BRIDGE PLANS (DWG 4.01–4.13) FOR IMPROVEMENTS.
27. SEE HARDSCAPE/URBAN DESIGN PLANS (DWG 6.01–6.43) FOR DETAILS.
28. INSTALL BI–AXIAL GEOGRID AT PAVEMENT TRANSITIONS PER DETAIL ON DWG 3.18.
29. INSTALL SAFETY RAIL OR CHAINLINK FENCE PER HARDSCAPE/URBAN DESIGN PLANS (DWG 6.01–6.43).
30. REPLACE AND RESET EXISTING SURVEY BENCH MARK, SEE SPECIFICATIONS FOR REQUIREMENTS.
31. CONSTRUCT LANDSCAPE BERM WITH EXCESS MATERIAL EXCAVATED FROM SITE TO APPROX. SIZE AND HEIGHT AS SHOWN.
32. POTHOLE EXISTING UTILITY CROSSING AND NOTIFY THE ENGINEER IF CONFLICTS EXIST.

GENERAL NOTES

1. ALL DIMENSIONS AND STATION AND OFFSET REFERENCES ARE TO FACE OF CURB UNLESS NOTED OTHERWISE.

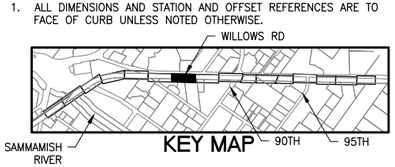

KEY MAP

VERT. SCALE 5' 0' 5' 10' IN FEET

HORZ. SCALE 20' 0' 20' 40' IN FEET

CALL BEFORE YOU DIG 1–800–424–5555

CityofRedmond WASHINGTON

CITY OF REDMOND
PUBLIC WORKS DEPARTMENT
15670 NE 85TH STREET – REDMOND, WA 98073–9710

Redmond Central Connector
Phase II
City Project No. 20021314
Federal Aid No. CM–1065(011)

otak
Hammi Global Partner
11241 Willows Road NE
Suite 200
Redmond, Washington 98052
Phone: (425) 822–4446
FAX: (425) 827–9577
www.otak.com

DESIGN ENGR.	DRAWN	CHECKED
TP/SW	AK/EW	NV/DS

NO.	REVISION COMMENTS	BY	REVIEW	DATE

NICO M. VANDERGRAFT
STATE OF WASHINGTON
30792
REGISTERED PROFESSIONAL ENGINEER
1/14/16

TRAIL AND DRAINAGE
PLAN AND PROFILE

January 2016

PROJECT NO.
OTAK 32246

SHEET: 20 OF: 111

DRAWING NO.
3.07

Plotted: Jan 14, 2016 – 9:33am touta K:\project\32200\32246\Dwg\3.01–3.16.dwg Layout Name: 3.07

XREF LIST
Ltscale: 1
Resolved
TTLBLK
C246R500
C246R270
C246N036
C246R900
C246U630
T246X800
RCC II_BASE_TBP
C246G450
S246B190
S246Y220

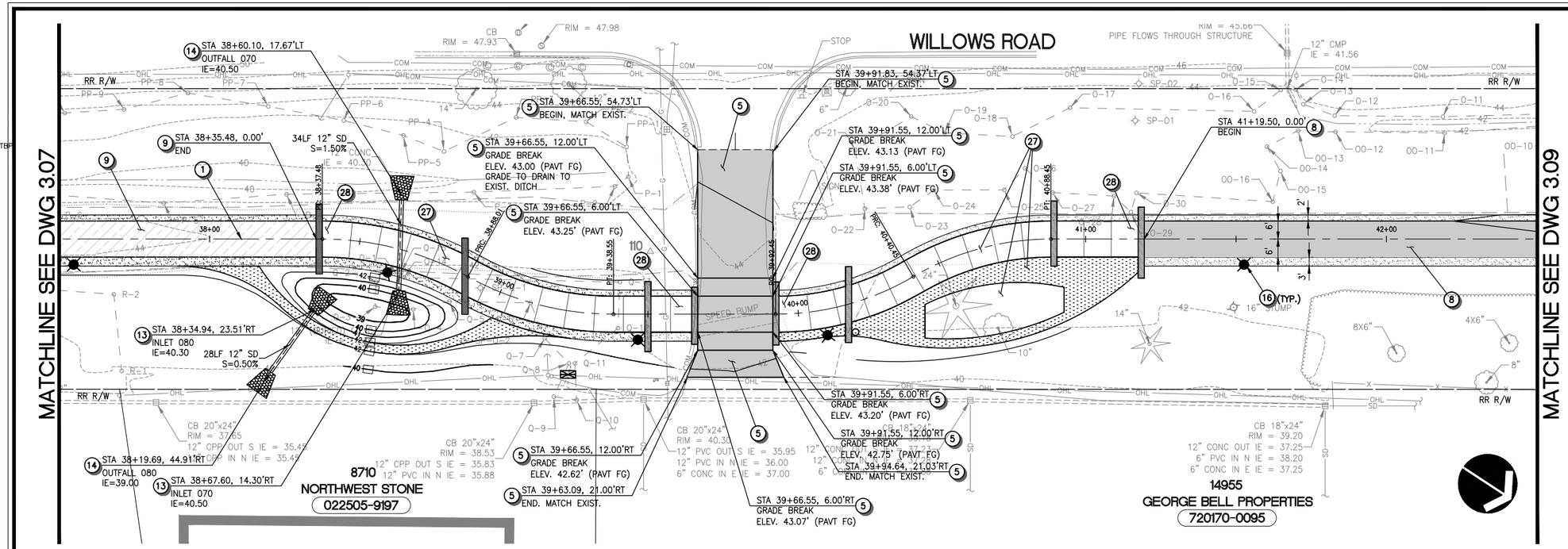

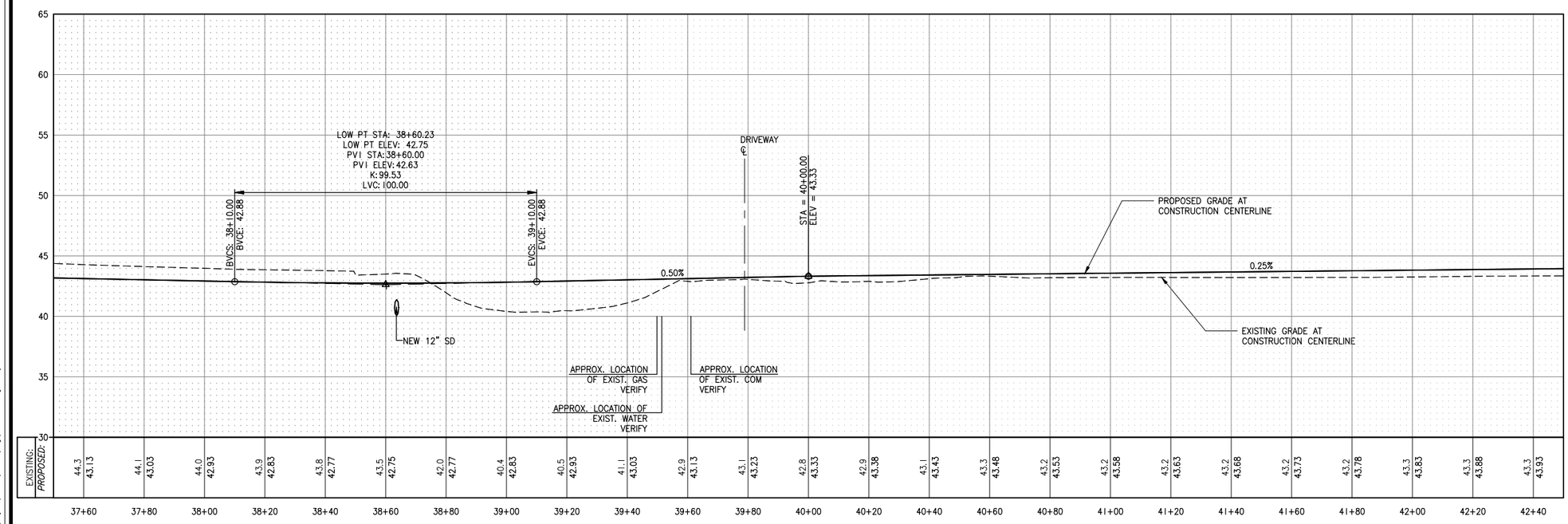

CONSTRUCTION NOTES

1. CONSTRUCTION CENTERLINE, SEE DWGS 1.03–1.04 FOR DETAILS.
2. INSTALL CEMENT CONCRETE CURB AND GUTTER TYPE "A" PER COR STD DETAIL NO. 304.
3. INSTALL CEMENT CONCRETE SIDEWALK PER COR STD DETAIL NO. 303.
4. INSTALL SIDEWALK RAMP, SEE DWGS 3.19–3.20 FOR LAYOUT.
5. RECONSTRUCT DRIVEWAY TO THE LIMITS SHOWN. SEE DWG 3.17 FOR PAVEMENT SECTION AND DWG 3.18 FOR PROFILE.
6. RECONSTRUCT ASPHALT PAVEMENT PER TYPICAL ROADWAY SECTION ON DWG 3.17, LIMITS PER PLAN.
7. INSTALL EXTRUDED CURB PER COR STD DETAIL NO. 304A.
8. CONSTRUCT HMA PAVEMENT TRAIL PER SECTION ON DWG 3.17.
9. CONSTRUCT POROUS PAVEMENT TRAIL PER SECTION ON DWG 3.17.
10. CONNECT TO EXISTING STORM DRAIN.
11. REPLACE EXISTING FRAME AND GRATE PER COR STD DETAIL NO. 631.
12. ADJUST EXISTING CATCH BASIN OR MANHOLE TO FINISHED GRADE. ROTATE GRATE OR COVER TO ALIGN WITH SCORING IF LOCATED WITHIN NEW CEMENT CONCRETE PAVING.
13. INSTALL PIPE INLET PROTECTION PER DETAIL ON DWG 3.22.
14. INSTALL PIPE OUTFALL PROTECTION PER DETAIL ON DWG 3.22.
15. INSTALL DRAINAGE STRUCTURE, TYPE AND SIZE PER PLAN. PROVIDE APRON PER DETAIL ON DWG 3.23 WHERE INDICATED.
16. LIGHT POLE, SEE ILLUMINATION PLANS (DWG 5.01–5.10) FOR DETAILS.
17. INSTALL VEGETATED DISPERSION STRIP PER DETAIL ON DWG 3.22.
18. REPLACE EXIST. CULVERT WITH NEW CULVERT PER DETAIL ON DWG 3.23.
19. INSTALL GRAVEL SHOULDER WITH INFILTRATION TRENCH PER DETAIL ON DWG 3.22.
20. EXISTING FEATURES OR STRUCTURE TO REMAIN, PROTECT DURING CONSTRUCTION.
21. EXISTING UTILITY TO REMAIN, PROTECT DURING CONSTRUCTION.
22. EXISTING UTILITY TO BE RELOCATED OR ADJUSTED TO FINISHED GRADE BY OTHERS.
23. ADJUST EXISTING UTILITY BOX TO FINISHED GRADE. REPLACE EXISTING LID WITH NON–SKID LID AND ROTATE TO ALIGN WITH SCORING IF LOCATED WITHIN NEW CEMENT CONCRETE PAVING.
24. REINSTALL SALVAGED BOLLARD PER COR STD DETAIL 911.
25. INSTALL RETAINING WALL PER DETAILS ON DWG 3.21.
26. SEE BRIDGE PLANS (DWG 4.01–4.13) FOR IMPROVEMENTS.
27. SEE HARDSCAPE/URBAN DESIGN PLANS (DWG 6.01–6.43) FOR DETAILS.
28. INSTALL BI–AXIAL GEOGRID AT PAVEMENT TRANSITIONS PER DETAIL ON DWG 3.18.
29. INSTALL SAFETY RAIL OR CHAINLINK FENCE PER HARDSCAPE/URBAN DESIGN PLANS (DWG 6.01–6.43).
30. REPLACE AND RESET EXISTING SURVEY BENCH MARK, SEE SPECIFICATIONS FOR REQUIREMENTS.
31. CONSTRUCT LANDSCAPE BERM WITH EXCESS MATERIAL EXCAVATED FROM SITE TO APPROX. SIZE AND HEIGHT AS SHOWN.
32. POTHOLE EXISTING UTILITY CROSSING AND NOTIFY THE ENGINEER IF CONFLICTS EXIST.

GENERAL NOTES

1. ALL DIMENSIONS AND STATION AND OFFSET REFERENCES ARE TO FACE OF CURB UNLESS NOTED OTHERWISE.

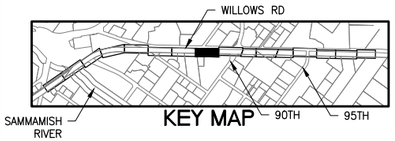

KEY MAP

VERT. SCALE 5' 0' 5' 10' IN FEET

HORZ. SCALE 20' 0' 20' 40' IN FEET

CALL BEFORE YOU DIG 1–800–424–5555

CityofRedmond WASHINGTON

CITY OF REDMOND
PUBLIC WORKS DEPARTMENT
15670 NE 85TH STREET – REDMOND, WA 98073–9710

Redmond Central Connector
Phase II
City Project No. 20021314
Federal Aid No. CM–1065(011)

otak
HammGlobal Partner
11241 Willows Road NE
Suite 200
Redmond, Washington 98052
Phone: (425) 822–4446
FAX: (425) 827–9577
www.otak.com

DESIGN ENGR.	DRAWN	CHECKED
TP/SW	AK/EW	NV/DS

NO.	REVISION COMMENTS	BY	REVIEW	DATE

NICO M. VANDERGRAFT
STATE OF WASHINGTON
30792
REGISTERED PROFESSIONAL ENGINEER
1/14/16

TRAIL AND DRAINAGE PLAN AND PROFILE

January 2016

PROJECT NO. OTAK 32246
SHEET: 21 OF: 111
DRAWING NO. 3.08

Plotted: Jan 14, 2016 – 9:33am toata K:\project\32200\32246\Dwg\3.01–3.16.dwg Layout Name: 3.08

XREF LIST
Ltscale: 1
Resolved
TTLBLK
C246R500
C246R270
C246N036
C246R900
C246U630
T246X800
RCC II_BASE_TBP
C246G450
S246B190
S246Y220

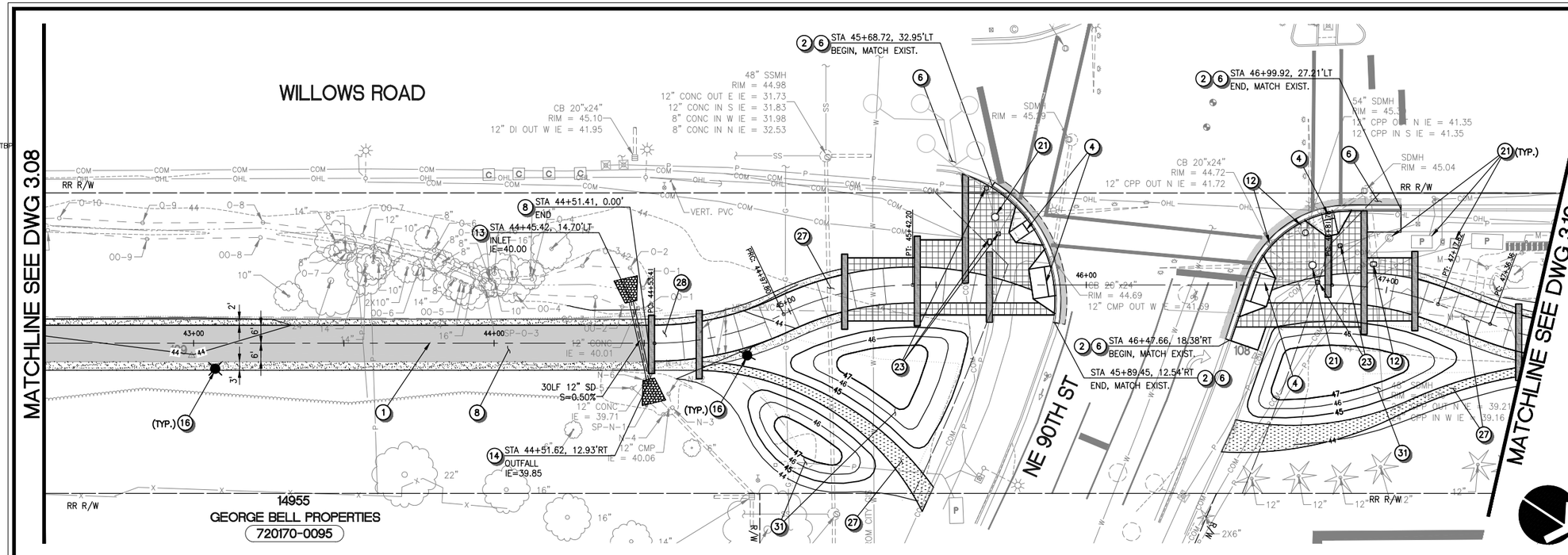

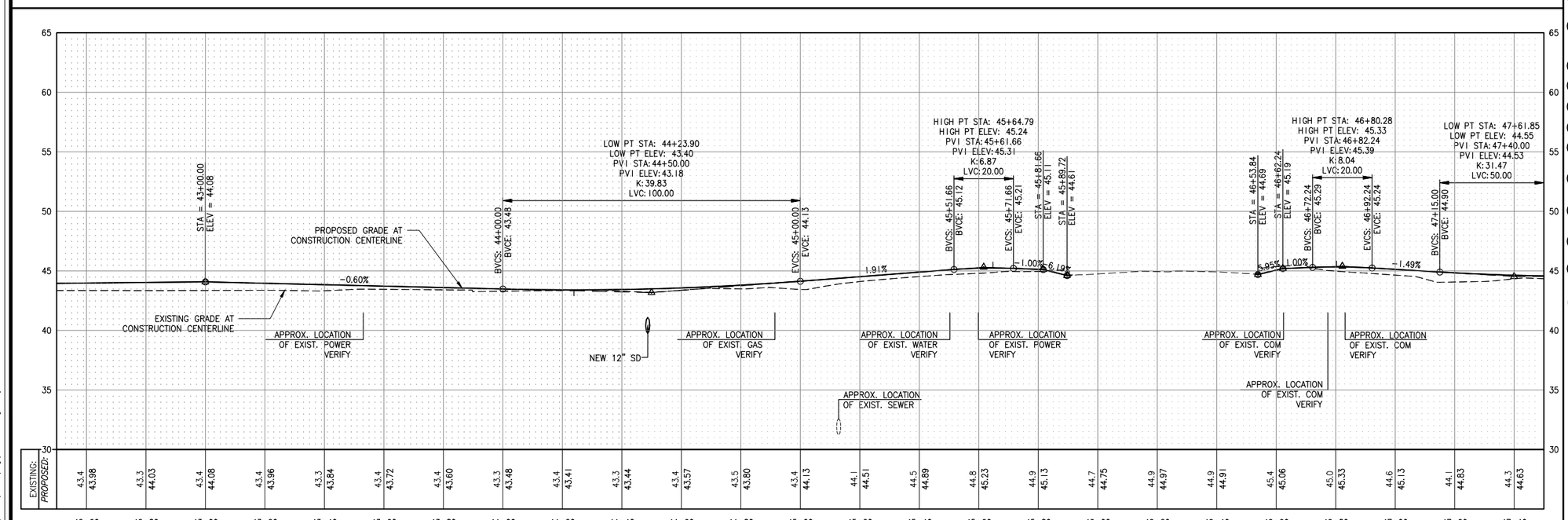

CONSTRUCTION NOTES

1. CONSTRUCTION CENTERLINE, SEE DWGS 1.03–1.04 FOR DETAILS.
2. INSTALL CEMENT CONCRETE CURB AND GUTTER TYPE "A" PER COR STD DETAIL NO. 304.
3. INSTALL CEMENT CONCRETE SIDEWALK PER COR STD DETAIL NO. 303.
4. INSTALL SIDEWALK RAMP, SEE DWGS 3.19–3.20 FOR LAYOUT.
5. RECONSTRUCT DRIVEWAY TO THE LIMITS SHOWN. SEE DWG 3.17 FOR PAVEMENT SECTION AND DWG 3.18 FOR PROFILE.
6. RECONSTRUCT ASPHALT PAVEMENT PER TYPICAL ROADWAY SECTION ON DWG 3.17, LIMITS PER PLAN.
7. INSTALL EXTRUDED CURB PER COR STD DETAIL NO. 304A.
8. CONSTRUCT HMA PAVEMENT TRAIL PER SECTION ON DWG 3.17.
9. CONSTRUCT POROUS PAVEMENT TRAIL PER SECTION ON DWG 3.17.
10. CONNECT TO EXISTING STORM DRAIN.
11. REPLACE EXISTING FRAME AND GRATE PER COR STD DETAIL NO. 631.
12. ADJUST EXISTING CATCH BASIN OR MANHOLE TO FINISHED GRADE. ROTATE GRATE OR COVER TO ALIGN WITH SCORING IF LOCATED WITHIN NEW CEMENT CONCRETE PAVING.
13. INSTALL PIPE INLET PROTECTION PER DETAIL ON DWG 3.22.
14. INSTALL PIPE OUTFALL PROTECTION PER DETAIL ON DWG 3.22.
15. INSTALL DRAINAGE STRUCTURE, TYPE AND SIZE PER PLAN. PROVIDE APRON PER DETAIL ON DWG 3.23 WHERE INDICATED.
16. LIGHT POLE, SEE ILLUMINATION PLANS (DWG 5.01–5.10) FOR DETAILS.
17. INSTALL VEGETATED DISPERSION STRIP PER DETAIL ON DWG 3.22.
18. REPLACE EXIST. CULVERT WITH NEW CULVERT PER DETAIL ON DWG 3.23.
19. INSTALL GRAVEL SHOULDER WITH INFILTRATION TRENCH PER DETAIL ON DWG 3.22.
20. EXISTING FEATURES OR STRUCTURE TO REMAIN, PROTECT DURING CONSTRUCTION.
21. EXISTING UTILITY TO REMAIN, PROTECT DURING CONSTRUCTION.
22. EXISTING UTILITY TO BE RELOCATED OR ADJUSTED TO FINISHED GRADE BY OTHERS.
23. ADJUST EXISTING UTILITY BOX TO FINISHED GRADE. REPLACE EXISTING LID WITH NON-SKID LID AND ROTATE TO ALIGN WITH SCORING IF LOCATED WITHIN NEW CEMENT CONCRETE PAVING.
24. REINSTALL SALVAGED BOLLARD PER COR STD DETAIL 911.
25. INSTALL RETAINING WALL PER DETAILS ON DWG 3.21.
26. SEE BRIDGE PLANS (DWG 4.01–4.13) FOR IMPROVEMENTS.
27. SEE HARDSCAPE/URBAN DESIGN PLANS (DWG 6.01–6.43) FOR DETAILS.
28. INSTALL BI-AXIAL GEOGRID AT PAVEMENT TRANSITIONS PER DETAIL ON DWG 3.18.
29. INSTALL SAFETY RAIL OR CHAINLINK FENCE PER HARDSCAPE/URBAN DESIGN PLANS (DWG 6.01–6.43).
30. REPLACE AND RESET EXISTING SURVEY BENCH MARK, SEE SPECIFICATIONS FOR REQUIREMENTS.
31. CONSTRUCT LANDSCAPE BERM WITH EXCESS MATERIAL EXCAVATED FROM SITE TO APPROX. SIZE AND HEIGHT AS SHOWN.
32. POTHOLE EXISTING UTILITY CROSSING AND NOTIFY THE ENGINEER IF CONFLICTS EXIST.

GENERAL NOTES

1. ALL DIMENSIONS AND STATION AND OFFSET REFERENCES ARE TO FACE OF CURB UNLESS NOTED OTHERWISE.

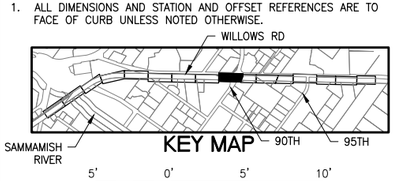

VERT. SCALE 5' 0' 5' 10' IN FEET

HORZ. SCALE 20' 0' 20' 40' IN FEET

CALL BEFORE YOU DIG 1-800-424-5555

CityofRedmond WASHINGTON

CITY OF REDMOND
PUBLIC WORKS DEPARTMENT
15670 NE 85TH STREET – REDMOND, WA 98073-9710

Redmond Central Connector
Phase II
City Project No. 20021314
Federal Aid No. CM-1065(011)

otak
HammlGlobal Partner
11241 Willows Road NE
Suite 200
Redmond, Washington 98052
Phone: (425) 822-4446
FAX: (425) 827-9577
www.otak.com

DESIGN ENGR.	DRAWN	CHECKED
TP/SW	AK/EW	NV/DS

NO.	REVISION COMMENTS	BY	REVIEW	DATE

NICO M. VANDERGRAFT, STATE OF WASHINGTON, 30793, REGISTERED PROFESSIONAL ENGINEER
1/14/16

TRAIL AND DRAINAGE
PLAN AND PROFILE

January 2016

PROJECT NO. OTAK 32246
SHEET: 22 OF: 111
DRAWING NO. 3.09

Plotted: Jan 14, 2016 – 9:34am touta K:\project\32200\32246\Dwg\3.01-3.16.dwg Layout Name: 3.09

XREF LIST
Ltscale: 1
Resolved
TTLBLK
C246R500
C246R270
C246N036
C246R900
C246U630
T246X800
RCC II_BASE_TBP
C246G450
S246B190
S246Y220

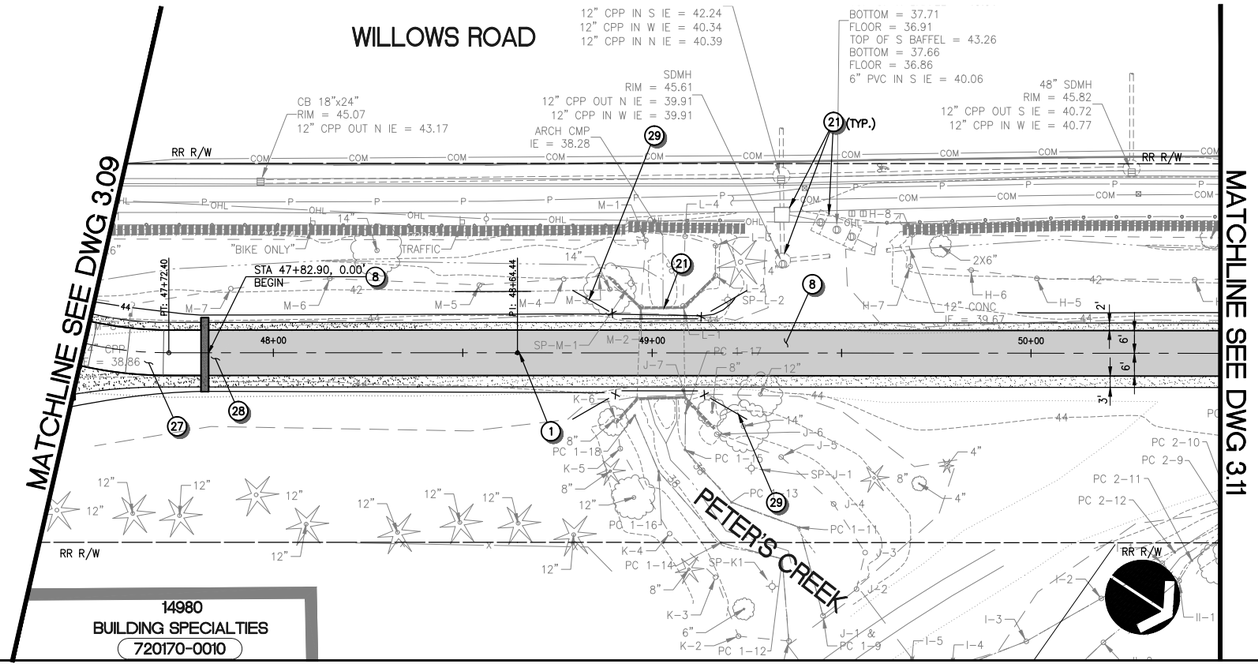

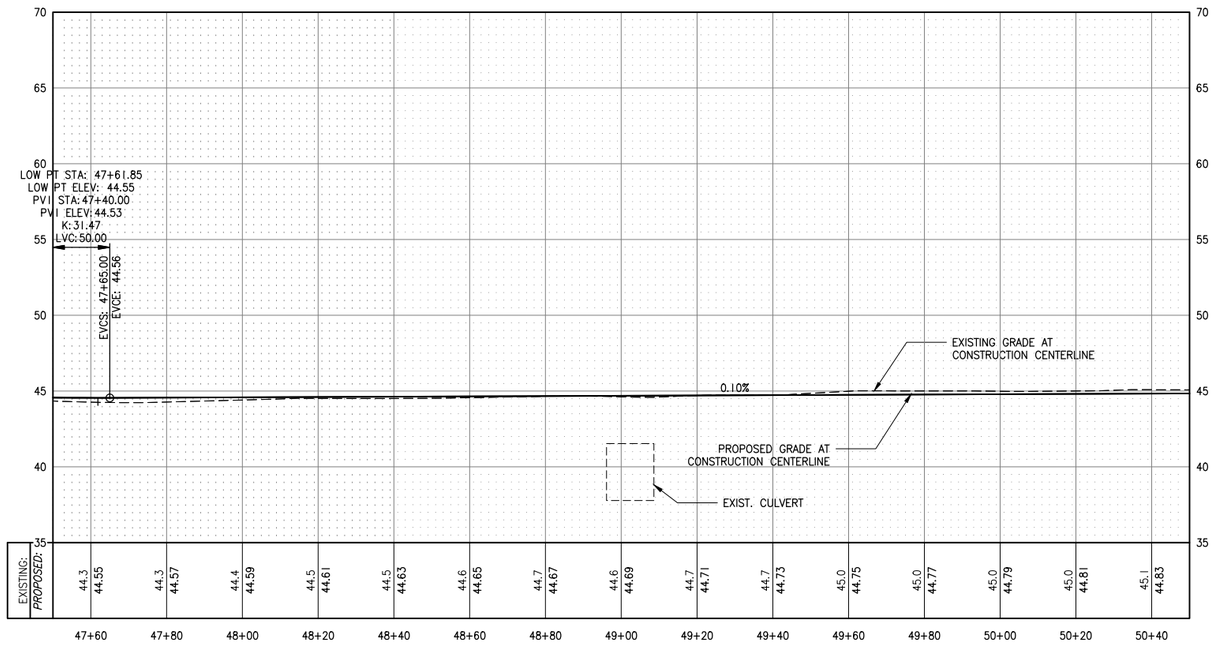

CONSTRUCTION NOTES

1. CONSTRUCTION CENTERLINE, SEE DWGS 1.03–1.04 FOR DETAILS.
2. INSTALL CEMENT CONCRETE CURB AND GUTTER TYPE "A" PER COR STD DETAIL NO. 304.
3. INSTALL CEMENT CONCRETE SIDEWALK PER COR STD DETAIL NO. 303.
4. INSTALL SIDEWALK RAMP, SEE DWGS 3.19–3.20 FOR LAYOUT.
5. RECONSTRUCT DRIVEWAY TO THE LIMITS SHOWN. SEE DWG 3.17 FOR PAVEMENT SECTION AND DWG 3.18 FOR PROFILE.
6. RECONSTRUCT ASPHALT PAVEMENT PER TYPICAL ROADWAY SECTION ON DWG 3.17, LIMITS PER PLAN.
7. INSTALL EXTRUDED CURB PER COR STD DETAIL NO. 304A.
8. CONSTRUCT HMA PAVEMENT TRAIL PER SECTION ON DWG 3.17.
9. CONSTRUCT POROUS PAVEMENT TRAIL PER SECTION ON DWG 3.17.
10. CONNECT TO EXISTING STORM DRAIN.
11. REPLACE EXISTING FRAME AND GRATE PER COR STD DETAIL NO. 631.
12. ADJUST EXISTING CATCH BASIN OR MANHOLE TO FINISHED GRADE. ROTATE GRATE OR COVER TO ALIGN WITH SCORING IF LOCATED WITHIN NEW CEMENT CONCRETE PAVING.
13. INSTALL PIPE INLET PROTECTION PER DETAIL ON DWG 3.22.
14. INSTALL PIPE OUTFALL PROTECTION PER DETAIL ON DWG 3.22.
15. INSTALL DRAINAGE STRUCTURE, TYPE AND SIZE PER PLAN. PROVIDE APRON PER DETAIL ON DWG 3.23 WHERE INDICATED.
16. LIGHT POLE, SEE ILLUMINATION PLANS (DWG 5.01–5.10) FOR DETAILS.
17. INSTALL VEGETATED DISPERSION STRIP PER DETAIL ON DWG 3.22.
18. REPLACE EXIST. CULVERT WITH NEW CULVERT PER DETAIL ON DWG 3.23.
19. INSTALL GRAVEL SHOULDER WITH INFILTRATION TRENCH PER DETAIL ON DWG 3.22.
20. EXISTING FEATURES OR STRUCTURE TO REMAIN, PROTECT DURING CONSTRUCTION.
21. EXISTING UTILITY TO REMAIN, PROTECT DURING CONSTRUCTION.
22. EXISTING UTILITY TO BE RELOCATED OR ADJUSTED TO FINISHED GRADE BY OTHERS.
23. ADJUST EXISTING UTILITY BOX TO FINISHED GRADE. REPLACE EXISTING LID WITH NON–SKID LID AND ROTATE TO ALIGN WITH SCORING IF LOCATED WITHIN NEW CEMENT CONCRETE PAVING.
24. REINSTALL SALVAGED BOLLARD PER COR STD DETAIL 911.
25. INSTALL RETAINING WALL PER DETAILS ON DWG 3.21.
26. SEE BRIDGE PLANS (DWG 4.01–4.13) FOR IMPROVEMENTS.
27. SEE HARDSCAPE/URBAN DESIGN PLANS (DWG 6.01–6.43) FOR DETAILS.
28. INSTALL BI–AXIAL GEOGRID AT PAVEMENT TRANSITIONS PER DETAIL ON DWG 3.18.
29. INSTALL SAFETY RAIL OR CHAINLINK FENCE PER HARDSCAPE/URBAN DESIGN PLANS (DWG 6.01–6.43).
30. REPLACE AND RESET EXISTING SURVEY BENCH MARK, SEE SPECIFICATIONS FOR REQUIREMENTS.
31. CONSTRUCT LANDSCAPE BERM WITH EXCESS MATERIAL EXCAVATED FROM SITE TO APPROX. SIZE AND HEIGHT AS SHOWN.
32. POTHOLE EXISTING UTILITY CROSSING AND NOTIFY THE ENGINEER IF CONFLICTS EXIST.

GENERAL NOTES

1. ALL DIMENSIONS AND STATION AND OFFSET REFERENCES ARE TO FACE OF CURB UNLESS NOTED OTHERWISE.

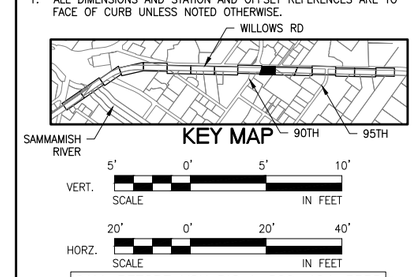

CALL BEFORE YOU DIG 1–800–424–5555

CityofRedmond WASHINGTON

CITY OF REDMOND
PUBLIC WORKS DEPARTMENT
15670 NE 85TH STREET – REDMOND, WA 98073–9710

Redmond Central Connector
Phase II
City Project No. 20021314
Federal Aid No. CM–1065(011)

otak
Hammi Global Partner
11241 Willows Road NE
Suite 200
Redmond, Washington 98052
Phone: (425) 822–4446
FAX: (425) 827–9577
www.otak.com

DESIGN ENGR.	DRAWN	CHECKED
TP/SW	AK/EW	NV/DS

NO.	REVISION COMMENTS	BY	REVIEW	DATE

NICO M. VANDERGRAFT
STATE OF WASHINGTON
30792
REGISTERED PROFESSIONAL ENGINEER
1/14/16

TRAIL AND DRAINAGE
PLAN AND PROFILE

January 2016

PROJECT NO.
OTAK 32246

SHEET: 23 OF: 111

DRAWING NO.
3.10

Plotted: Jan 14, 2016 – 9:34am touta K:\project\32200\32246\Dwg\3.01–3.16.dwg Layout Name: 3.10

XREF LIST
Ltscale: 1
Resolved
TTLBLK
C246R500
C246R270
C246N036
C246R900
C246U630
T246X800
RCC II_BASE_TBP
C246G450
S246B190
S246Y220

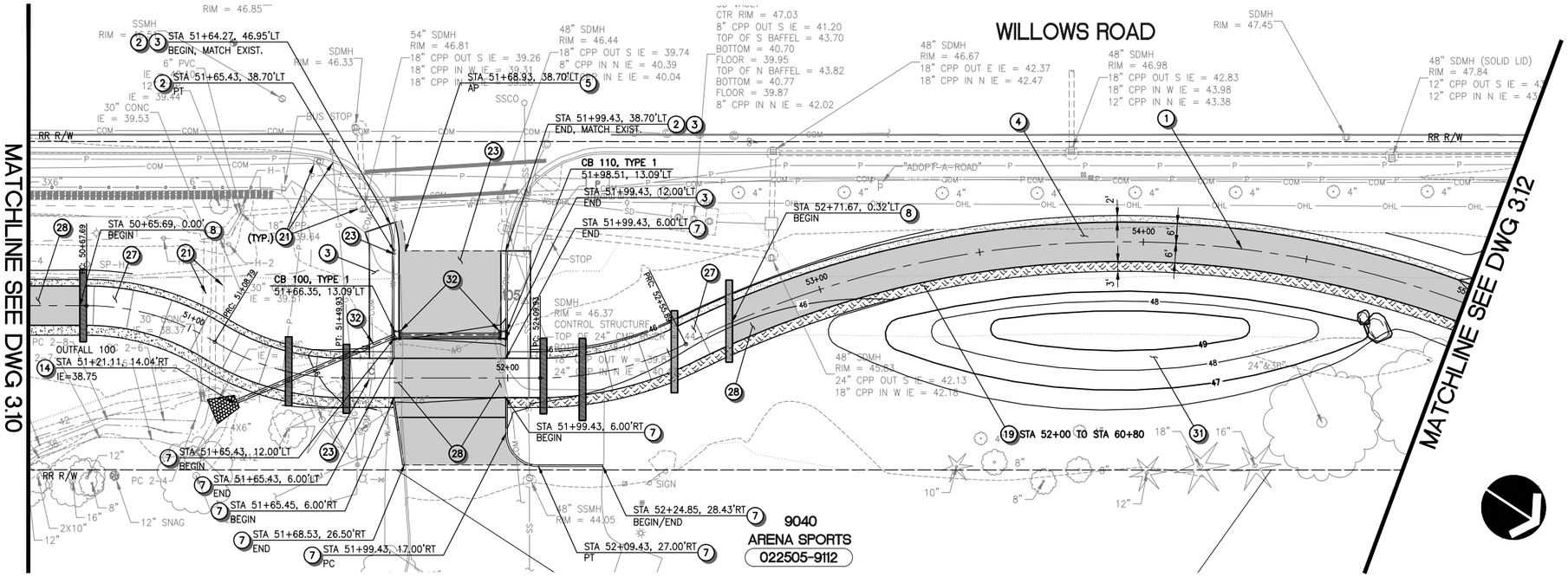

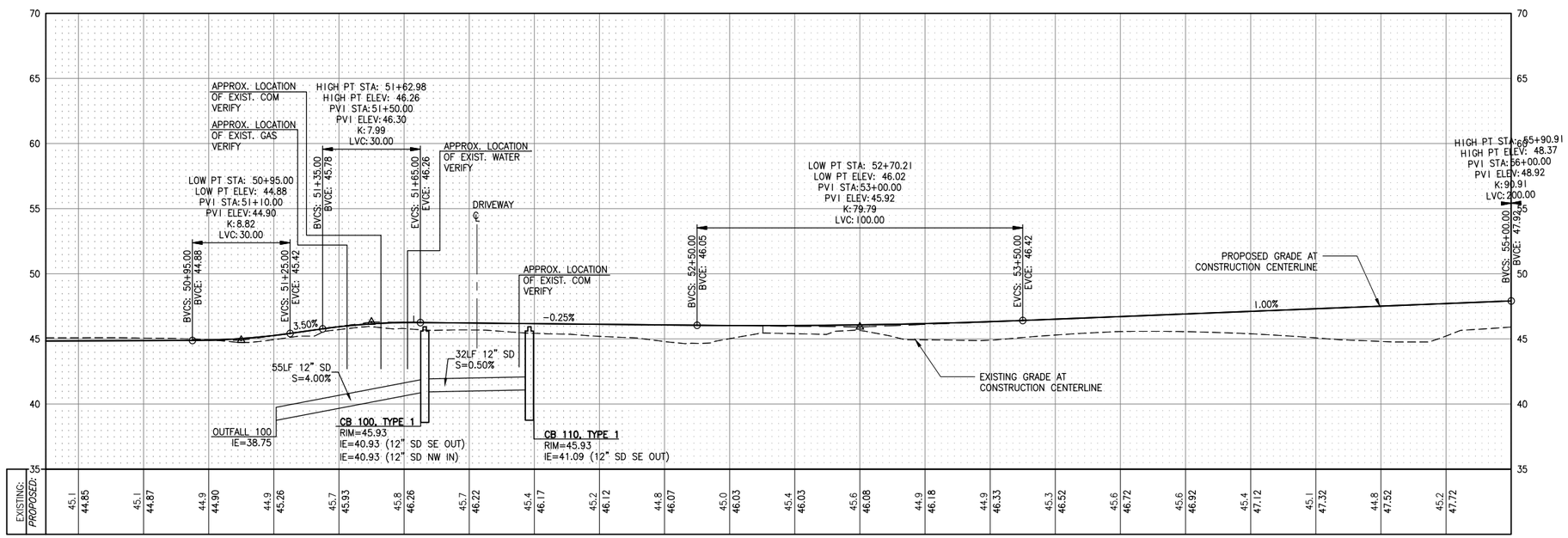

CONSTRUCTION NOTES

1. CONSTRUCTION CENTERLINE, SEE DWGS 1.03–1.04 FOR DETAILS.
2. INSTALL CEMENT CONCRETE CURB AND GUTTER TYPE "A" PER COR STD DETAIL NO. 304.
3. INSTALL CEMENT CONCRETE SIDEWALK PER COR STD DETAIL NO. 303.
4. INSTALL SIDEWALK RAMP, SEE DWGS 3.19–3.20 FOR LAYOUT.
5. RECONSTRUCT DRIVEWAY TO THE LIMITS SHOWN. SEE DWG 3.17 FOR PAVEMENT SECTION AND DWG 3.18 FOR PROFILE.
6. RECONSTRUCT ASPHALT PAVEMENT PER TYPICAL ROADWAY SECTION ON DWG 3.17, LIMITS PER PLAN.
7. INSTALL EXTRUDED CURB PER COR STD DETAIL NO. 304A.
8. CONSTRUCT HMA PAVEMENT TRAIL PER SECTION ON DWG 3.17.
9. CONSTRUCT POROUS PAVEMENT TRAIL PER SECTION ON DWG 3.17.
10. CONNECT TO EXISTING STORM DRAIN.
11. REPLACE EXISTING FRAME AND GRATE PER COR STD DETAIL NO. 631.
12. ADJUST EXISTING CATCH BASIN OR MANHOLE TO FINISHED GRADE. ROTATE GRATE OR COVER TO ALIGN WITH SCORING IF LOCATED WITHIN NEW CEMENT CONCRETE PAVING.
13. INSTALL PIPE INLET PROTECTION PER DETAIL ON DWG 3.22.
14. INSTALL PIPE OUTFALL PROTECTION PER DETAIL ON DWG 3.22.
15. INSTALL DRAINAGE STRUCTURE, TYPE AND SIZE PER PLAN. PROVIDE APRON PER DETAIL ON DWG 3.23 WHERE INDICATED.
16. LIGHT POLE, SEE ILLUMINATION PLANS (DWG 5.01–5.10) FOR DETAILS.
17. INSTALL VEGETATED DISPERSION STRIP PER DETAIL ON DWG 3.22.
18. REPLACE EXIST. CULVERT WITH NEW CULVERT PER DETAIL ON DWG 3.23.
19. INSTALL GRAVEL SHOULDER WITH INFILTRATION TRENCH PER DETAIL ON DWG 3.22.
20. EXISTING FEATURES OR STRUCTURE TO REMAIN, PROTECT DURING CONSTRUCTION.
21. EXISTING UTILITY TO REMAIN, PROTECT DURING CONSTRUCTION.
22. EXISTING UTILITY TO BE RELOCATED OR ADJUSTED TO FINISHED GRADE BY OTHERS.
23. ADJUST EXISTING UTILITY BOX TO FINISHED GRADE. REPLACE EXISTING LID WITH NON-SKID LID AND ROTATE TO ALIGN WITH SCORING IF LOCATED WITHIN NEW CEMENT CONCRETE PAVING.
24. REINSTALL SALVAGED BOLLARD PER COR STD DETAIL 911.
25. INSTALL RETAINING WALL PER DETAILS ON DWG 3.21.
26. SEE BRIDGE PLANS (DWG 4.01–4.13) FOR IMPROVEMENTS.
27. SEE HARDSCAPE/URBAN DESIGN PLANS (DWG 6.01–6.43) FOR DETAILS.
28. INSTALL BI-AXIAL GEOGRID AT PAVEMENT TRANSITIONS PER DETAIL ON DWG 3.18.
29. INSTALL SAFETY RAIL OR CHAINLINK FENCE PER HARDSCAPE/URBAN DESIGN PLANS (DWG 6.01–6.43).
30. REPLACE AND RESET EXISTING SURVEY BENCH MARK, SEE SPECIFICATIONS FOR REQUIREMENTS.
31. CONSTRUCT LANDSCAPE BERM WITH EXCESS MATERIAL EXCAVATED FROM SITE TO APPROX. SIZE AND HEIGHT AS SHOWN.
32. POTHOLE EXISTING UTILITY CROSSING AND NOTIFY THE ENGINEER IF CONFLICTS EXIST.

GENERAL NOTES

1. ALL DIMENSIONS AND STATION AND OFFSET REFERENCES ARE TO FACE OF CURB UNLESS NOTED OTHERWISE.

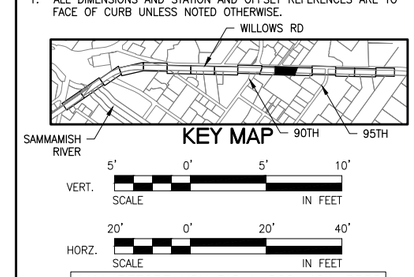

CALL BEFORE YOU DIG 1–800–424–5555

Plotted: Jan 14, 2016 – 9:34am touta K:\project\32200\32246\Dwg\3.01-3.16.dwg Layout Name: 3.11

CityofRedmond WASHINGTON

CITY OF REDMOND
PUBLIC WORKS DEPARTMENT
15670 NE 85TH STREET – REDMOND, WA 98073–9710

Redmond Central Connector
Phase II
City Project No. 20021314
Federal Aid No. CM–1065(011)

otak
Hammi/Global Partner
11241 Willows Road NE
Suite 200
Redmond, Washington 98052
Phone: (425) 822-4446
FAX: (425) 827-9577
www.otak.com

DESIGN ENGR.	DRAWN	CHECKED
TP/SW	AK/EW	NV/DS

NO.	REVISION COMMENTS	BY	REVIEW	DATE

NICO M. VANDERGRAFT, STATE OF WASHINGTON, 30793, REGISTERED PROFESSIONAL ENGINEER
1/14/16

TRAIL AND DRAINAGE PLAN AND PROFILE

January 2016

PROJECT NO. OTAK 32246
SHEET: 24 OF: 111
DRAWING NO. 3.11

XREF LIST
Ltscale: 1
Resolved
TTLBLK
C246R500
C246R270
C246N036
C246R900
C246U630
T246X800
RCC II_BASE_TBP
C246G450
S246B190
S246Y220

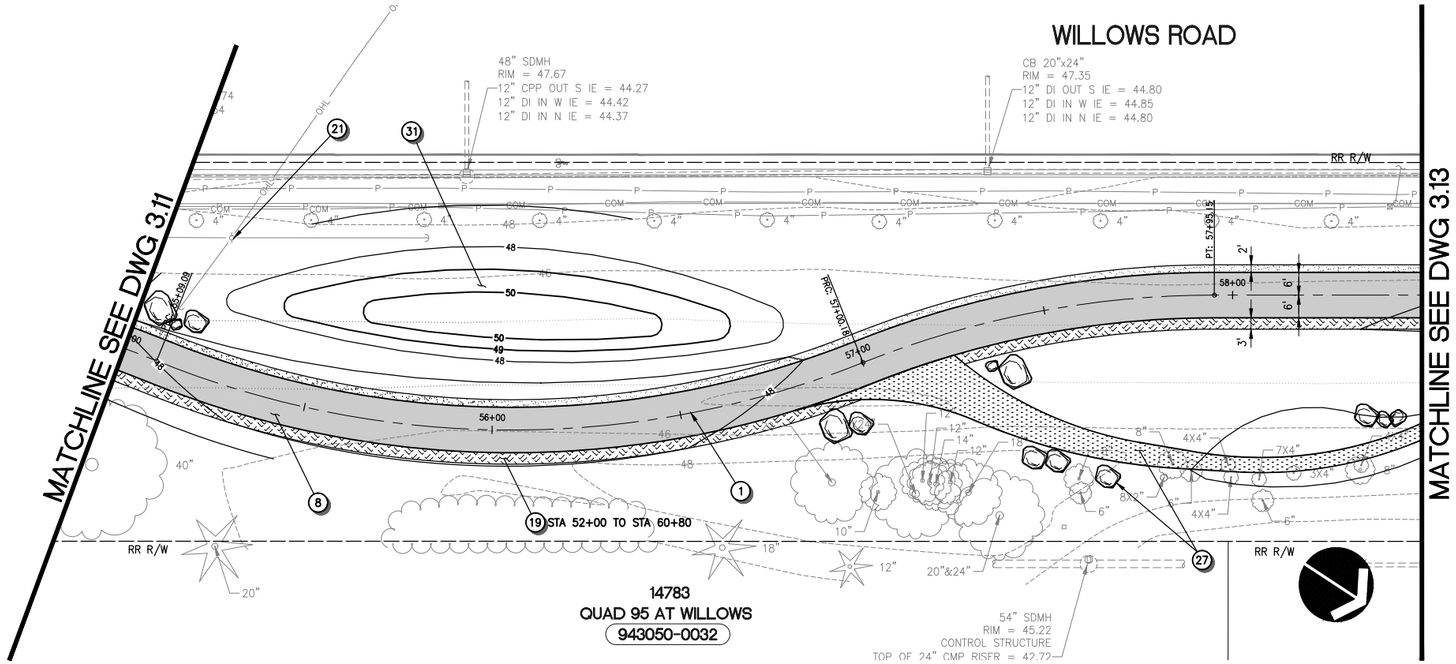

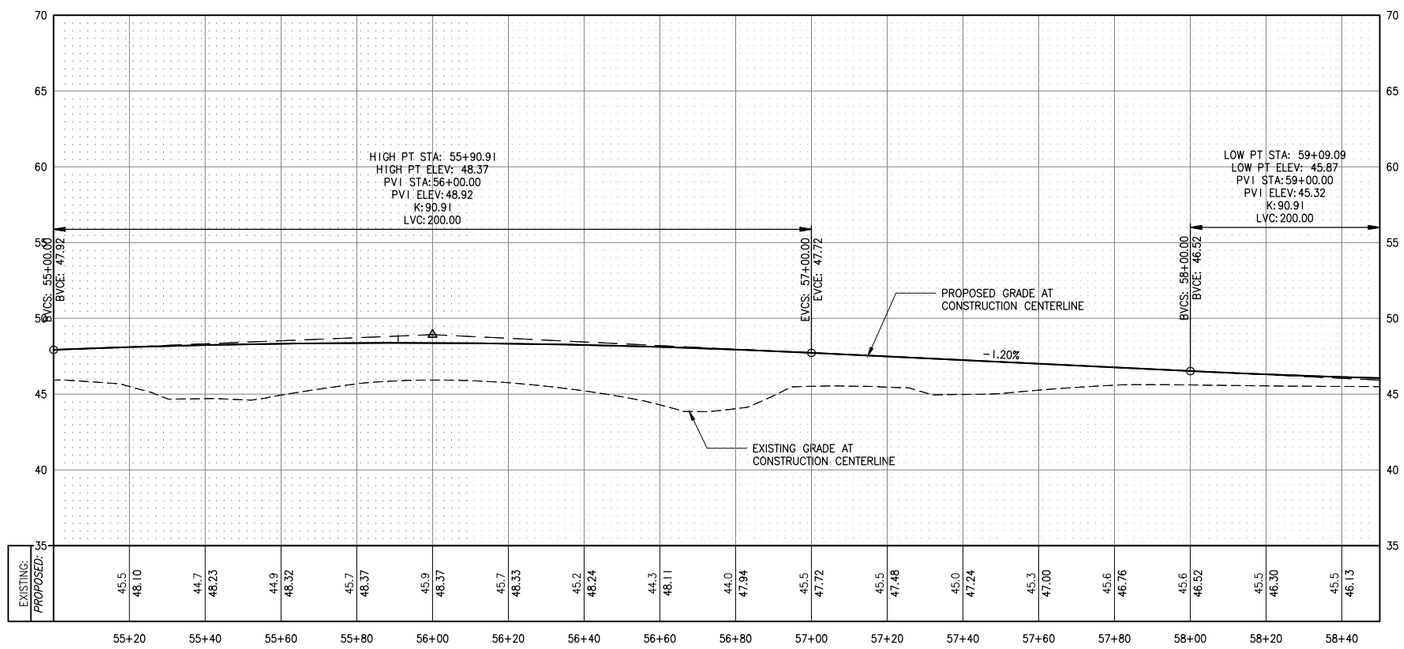

CONSTRUCTION NOTES

1. CONSTRUCTION CENTERLINE, SEE DWGS 1.03–1.04 FOR DETAILS.
2. INSTALL CEMENT CONCRETE CURB AND GUTTER TYPE "A" PER COR STD DETAIL NO. 304.
3. INSTALL CEMENT CONCRETE SIDEWALK PER COR STD DETAIL NO. 303.
4. INSTALL SIDEWALK RAMP, SEE DWGS 3.19–3.20 FOR LAYOUT.
5. RECONSTRUCT DRIVEWAY TO THE LIMITS SHOWN. SEE DWG 3.17 FOR PAVEMENT SECTION AND DWG 3.18 FOR PROFILE.
6. RECONSTRUCT ASPHALT PAVEMENT PER TYPICAL ROADWAY SECTION ON DWG 3.17, LIMITS PER PLAN.
7. INSTALL EXTRUDED CURB PER COR STD DETAIL NO. 304A.
8. CONSTRUCT HMA PAVEMENT TRAIL PER SECTION ON DWG 3.17.
9. CONSTRUCT POROUS PAVEMENT TRAIL PER SECTION ON DWG 3.17.
10. CONNECT TO EXISTING STORM DRAIN.
11. REPLACE EXISTING FRAME AND GRATE PER COR STD DETAIL NO. 631.
12. ADJUST EXISTING CATCH BASIN OR MANHOLE TO FINISHED GRADE. ROTATE GRATE OR COVER TO ALIGN WITH SCORING IF LOCATED WITHIN NEW CEMENT CONCRETE PAVING.
13. INSTALL PIPE INLET PROTECTION PER DETAIL ON DWG 3.22.
14. INSTALL PIPE OUTFALL PROTECTION PER DETAIL ON DWG 3.22.
15. INSTALL DRAINAGE STRUCTURE, TYPE AND SIZE PER PLAN. PROVIDE APRON PER DETAIL ON DWG 3.23 WHERE INDICATED.
16. LIGHT POLE, SEE ILLUMINATION PLANS (DWG 5.01–5.10) FOR DETAILS.
17. INSTALL VEGETATED DISPERSION STRIP PER DETAIL ON DWG 3.22.
18. REPLACE EXIST. CULVERT WITH NEW CULVERT PER DETAIL ON DWG 3.23.
19. INSTALL GRAVEL SHOULDER WITH INFILTRATION TRENCH PER DETAIL ON DWG 3.22.
20. EXISTING FEATURES OR STRUCTURE TO REMAIN, PROTECT DURING CONSTRUCTION.
21. EXISTING UTILITY TO REMAIN, PROTECT DURING CONSTRUCTION.
22. EXISTING UTILITY TO BE RELOCATED OR ADJUSTED TO FINISHED GRADE BY OTHERS.
23. ADJUST EXISTING UTILITY BOX TO FINISHED GRADE. REPLACE EXISTING LID WITH NON–SKID LID AND ROTATE TO ALIGN WITH SCORING IF LOCATED WITHIN NEW CEMENT CONCRETE PAVING.
24. REINSTALL SALVAGED BOLLARD PER COR STD DETAIL 911.
25. INSTALL RETAINING WALL PER DETAILS ON DWG 3.21.
26. SEE BRIDGE PLANS (DWG 4.01–4.13) FOR IMPROVEMENTS.
27. SEE HARDSCAPE/URBAN DESIGN PLANS (DWG 6.01–6.43) FOR DETAILS.
28. INSTALL BI–AXIAL GEOGRID AT PAVEMENT TRANSITIONS PER DETAIL ON DWG 3.18.
29. INSTALL SAFETY RAIL OR CHAINLINK FENCE PER HARDSCAPE/URBAN DESIGN PLANS (DWG 6.01–6.43).
30. REPLACE AND RESET EXISTING SURVEY BENCH MARK, SEE SPECIFICATIONS FOR REQUIREMENTS.
31. CONSTRUCT LANDSCAPE BERM WITH EXCESS MATERIAL EXCAVATED FROM SITE TO APPROX. SIZE AND HEIGHT AS SHOWN.
32. POTHOLE EXISTING UTILITY CROSSING AND NOTIFY THE ENGINEER IF CONFLICTS EXIST.

GENERAL NOTES

1. ALL DIMENSIONS AND STATION AND OFFSET REFERENCES ARE TO FACE OF CURB UNLESS NOTED OTHERWISE.

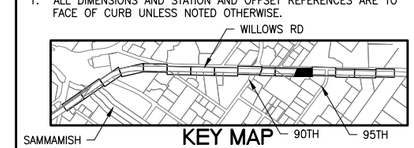

KEY MAP

VERT. SCALE: 5' 0' 5' 10' IN FEET

HORZ. SCALE: 20' 0' 20' 40' IN FEET

CALL BEFORE YOU DIG 1–800–424–5555

City of Redmond WASHINGTON

CITY OF REDMOND
PUBLIC WORKS DEPARTMENT
15670 NE 85TH STREET – REDMOND, WA 98073–9710

Redmond Central Connector
Phase II
City Project No. 20021314
Federal Aid No. CM–1065(011)

otak
Hammi Global Partner
11241 Willows Road NE
Suite 200
Redmond, Washington 98052
Phone: (425) 822–4446
FAX: (425) 827–9577
www.otak.com

DESIGN ENGR.	DRAWN	CHECKED
TP/SW	AK/EW	NV/DS

NO.	REVISION COMMENTS	BY	REVIEW	DATE

NICO M. VANDERGRESSL
STATE OF WASHINGTON
30792
REGISTERED PROFESSIONAL ENGINEER
1/14/16

TRAIL AND DRAINAGE PLAN AND PROFILE

January 2016

PROJECT NO. OTAK 32246
SHEET: 25 OF: 111
DRAWING NO. 3.12

Plotted: Jan 14, 2016 – 9:34am touta K:\project\32200\32246\Dwg\3.01–3.16.dwg Layout Name: 3.12

XREF LIST
Ltscale: 1
Resolved
TTLBLK
C246R500
C246R270
C246N036
C246R900
C246U630
T246X800
RCC II_BASE_TBP
C246G450
S246B190
S246Y220

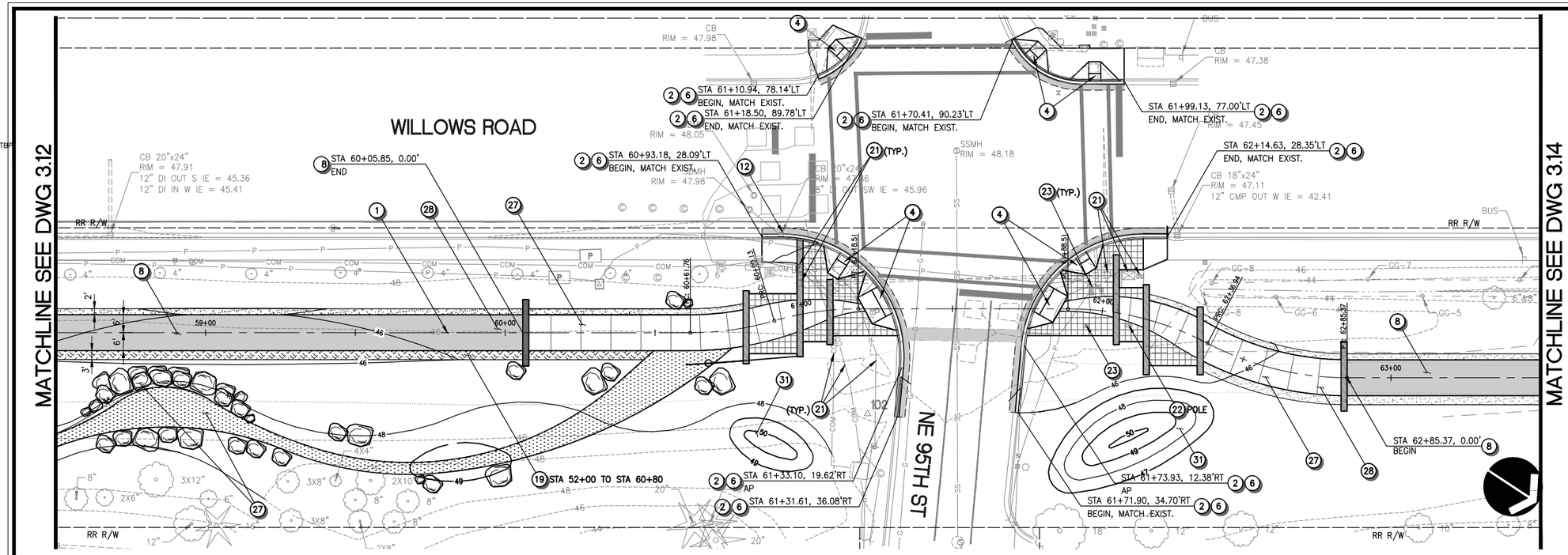

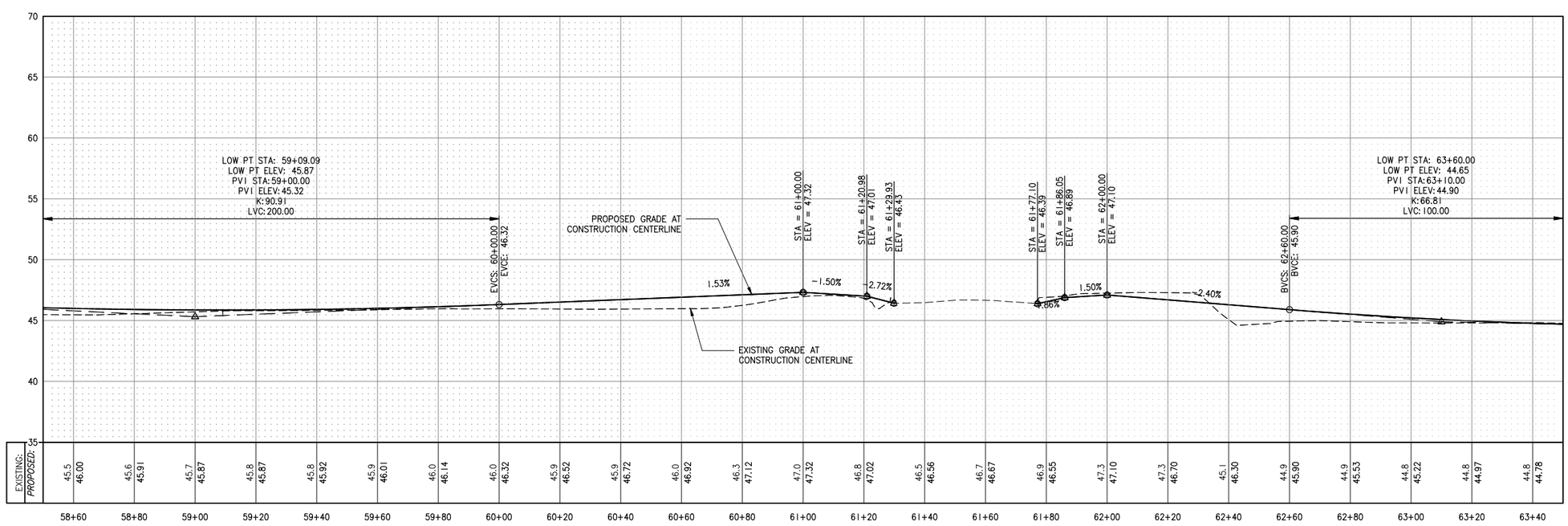

CONSTRUCTION NOTES

1. CONSTRUCTION CENTERLINE, SEE DWGS 1.03–1.04 FOR DETAILS.
2. INSTALL CEMENT CONCRETE CURB AND GUTTER TYPE "A" PER COR STD DETAIL NO. 304.
3. INSTALL CEMENT CONCRETE SIDEWALK PER COR STD DETAIL NO. 303.
4. INSTALL SIDEWALK RAMP, SEE DWGS 3.19–3.20 FOR LAYOUT.
5. RECONSTRUCT DRIVEWAY TO THE LIMITS SHOWN. SEE DWG 3.17 FOR PAVEMENT SECTION AND DWG 3.18 FOR PROFILE.
6. RECONSTRUCT ASPHALT PAVEMENT PER TYPICAL ROADWAY SECTION ON DWG 3.17, LIMITS PER PLAN.
7. INSTALL EXTRUDED CURB PER COR STD DETAIL NO. 304A.
8. CONSTRUCT HMA PAVEMENT TRAIL PER SECTION ON DWG 3.17.
9. CONSTRUCT POROUS PAVEMENT TRAIL PER SECTION ON DWG 3.17.
10. CONNECT TO EXISTING STORM DRAIN.
11. REPLACE EXISTING FRAME AND GRATE PER COR STD DETAIL NO. 631.
12. ADJUST EXISTING CATCH BASIN OR MANHOLE TO FINISHED GRADE. ROTATE GRATE OR COVER TO ALIGN WITH SCORING IF LOCATED WITHIN NEW CEMENT CONCRETE PAVING.
13. INSTALL PIPE INLET PROTECTION PER DETAIL ON DWG 3.22.
14. INSTALL PIPE OUTFALL PROTECTION PER DETAIL ON DWG 3.22.
15. INSTALL DRAINAGE STRUCTURE, TYPE AND SIZE PER PLAN. PROVIDE APRON PER DETAIL ON DWG 3.23 WHERE INDICATED.
16. LIGHT POLE, SEE ILLUMINATION PLANS (DWG 5.01–5.10) FOR DETAILS.
17. INSTALL VEGETATED DISPERSION STRIP PER DETAIL ON DWG 3.22.
18. REPLACE EXIST. CULVERT WITH NEW CULVERT PER DETAIL ON DWG 3.23.
19. INSTALL GRAVEL SHOULDER WITH INFILTRATION TRENCH PER DETAIL ON DWG 3.22.
20. EXISTING FEATURES OR STRUCTURE TO REMAIN, PROTECT DURING CONSTRUCTION.
21. EXISTING UTILITY TO REMAIN, PROTECT DURING CONSTRUCTION.
22. EXISTING UTILITY TO BE RELOCATED OR ADJUSTED TO FINISHED GRADE BY OTHERS.
23. ADJUST EXISTING UTILITY BOX TO FINISHED GRADE. REPLACE EXISTING LID WITH NON–SKID LID AND ROTATE TO ALIGN WITH SCORING IF LOCATED WITHIN NEW CEMENT CONCRETE PAVING.
24. REINSTALL SALVAGED BOLLARD PER COR STD DETAIL 911.
25. INSTALL RETAINING WALL PER DETAILS ON DWG 3.21.
26. SEE BRIDGE PLANS (DWG 4.01–4.13) FOR IMPROVEMENTS.
27. SEE HARDSCAPE/URBAN DESIGN PLANS (DWG 6.01–6.43) FOR DETAILS.
28. INSTALL BI–AXIAL GEOGRID AT PAVEMENT TRANSITIONS PER DETAIL ON DWG 3.18.
29. INSTALL SAFETY RAIL OR CHAINLINK FENCE PER HARDSCAPE/URBAN DESIGN PLANS (DWG 6.01–6.43).
30. REPLACE AND RESET EXISTING SURVEY BENCH MARK, SEE SPECIFICATIONS FOR REQUIREMENTS.
31. CONSTRUCT LANDSCAPE BERM WITH EXCESS MATERIAL EXCAVATED FROM SITE TO APPROX. SIZE AND HEIGHT AS SHOWN.
32. POTHOLE EXISTING UTILITY CROSSING AND NOTIFY THE ENGINEER IF CONFLICTS EXIST.

GENERAL NOTES

1. ALL DIMENSIONS AND STATION AND OFFSET REFERENCES ARE TO FACE OF CURB UNLESS NOTED OTHERWISE.

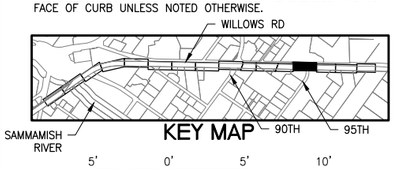

KEY MAP

VERT. SCALE 5' 0' 5' 10' IN FEET

HORZ. SCALE 20' 0' 20' 40' IN FEET

CALL BEFORE YOU DIG 1–800–424–5555

CityofRedmond WASHINGTON

CITY OF REDMOND
PUBLIC WORKS DEPARTMENT
15670 NE 85TH STREET – REDMOND, WA 98073–9710

Redmond Central Connector
Phase II
City Project No. 20021314
Federal Aid No. CM–1065(011)

otak
HammGlobal Partner
11241 Willows Road NE
Suite 200
Redmond, Washington 98052
Phone: (425) 822–4446
FAX: (425) 827–9577
www.otak.com

DESIGN ENGR.	DRAWN	CHECKED
TP/SW	AK/EW	NV/DS

NO.	REVISION COMMENTS	BY	REVIEW	DATE

NICO M. VANDERGRAFT, STATE OF WASHINGTON, 30792, REGISTERED PROFESSIONAL ENGINEER
1/14/16

TRAIL AND DRAINAGE
PLAN AND PROFILE

January 2016

PROJECT NO.
OTAK 32246

SHEET: 26 OF: 111

DRAWING NO.
3.13

Plotted: Jan 14, 2016 – 9:35am touta K:\project\32200\32246\Dwg\3.01–3.16.dwg Layout Name: 3.13

XREF LIST
Ltscale: 1
Resolved
TTLBLK
C246R500
C246R270
C246N036
C246R900
C246U630
T246X800
RCC II_BASE_TBP
C246G450
S246B190
S246Y220

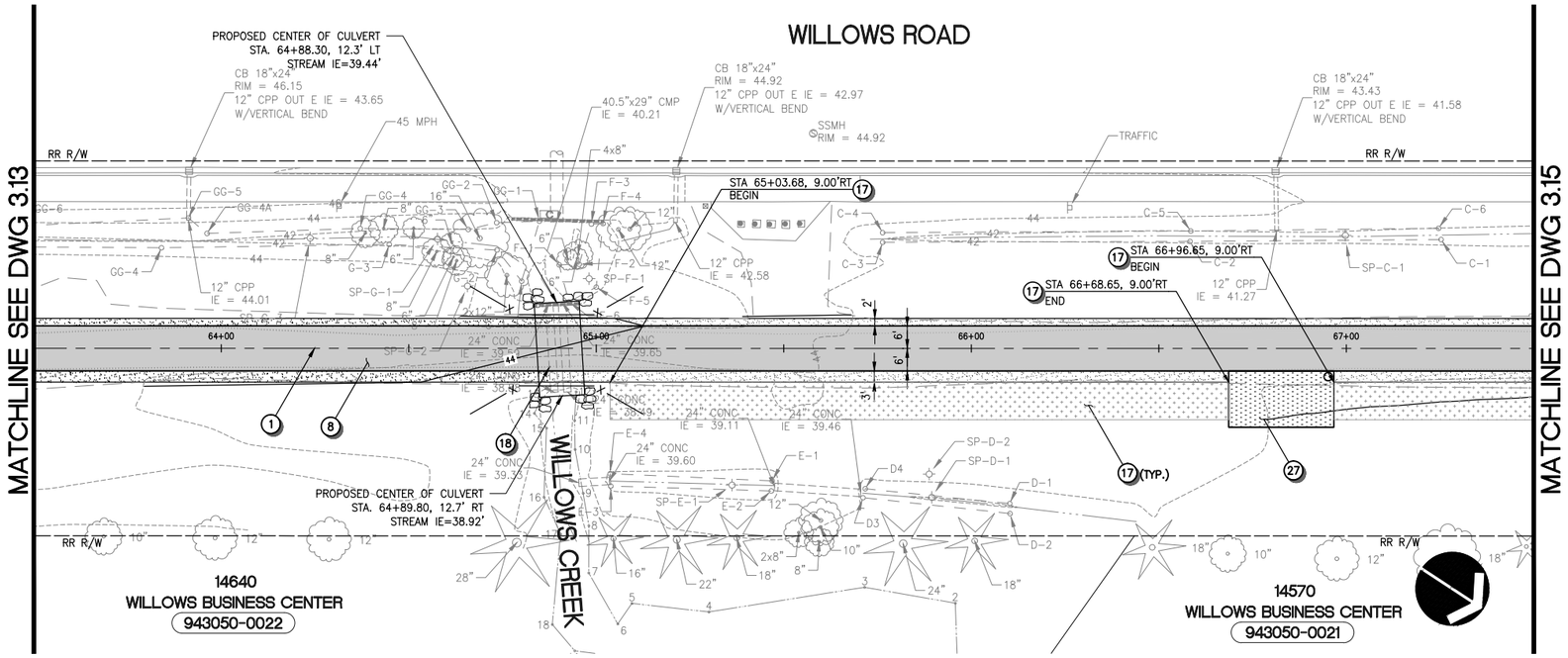

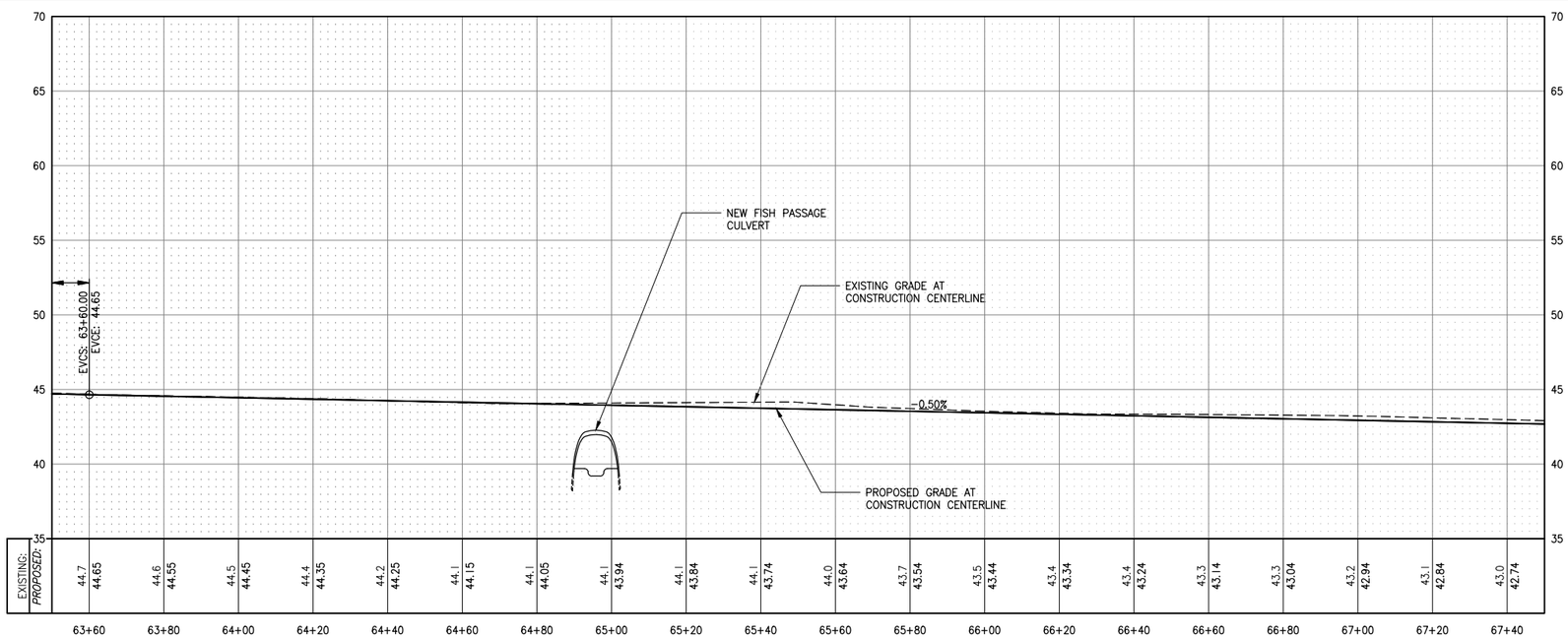

CONSTRUCTION NOTES

1. CONSTRUCTION CENTERLINE, SEE DWGS 1.03–1.04 FOR DETAILS.
2. INSTALL CEMENT CONCRETE CURB AND GUTTER TYPE "A" PER COR STD DETAIL NO. 304.
3. INSTALL CEMENT CONCRETE SIDEWALK PER COR STD DETAIL NO. 303.
4. INSTALL SIDEWALK RAMP, SEE DWGS 3.19–3.20 FOR LAYOUT.
5. RECONSTRUCT DRIVEWAY TO THE LIMITS SHOWN. SEE DWG 3.17 FOR PAVEMENT SECTION AND DWG 3.18 FOR PROFILE.
6. RECONSTRUCT ASPHALT PAVEMENT PER TYPICAL ROADWAY SECTION ON DWG 3.17, LIMITS PER PLAN.
7. INSTALL EXTRUDED CURB PER COR STD DETAIL NO. 304A.
8. CONSTRUCT HMA PAVEMENT TRAIL PER SECTION ON DWG 3.17.
9. CONSTRUCT POROUS PAVEMENT TRAIL PER SECTION ON DWG 3.17.
10. CONNECT TO EXISTING STORM DRAIN.
11. REPLACE EXISTING FRAME AND GRATE PER COR STD DETAIL NO. 631.
12. ADJUST EXISTING CATCH BASIN OR MANHOLE TO FINISHED GRADE. ROTATE GRATE OR COVER TO ALIGN WITH SCORING IF LOCATED WITHIN NEW CEMENT CONCRETE PAVING.
13. INSTALL PIPE INLET PROTECTION PER DETAIL ON DWG 3.22.
14. INSTALL PIPE OUTFALL PROTECTION PER DETAIL ON DWG 3.22.
15. INSTALL DRAINAGE STRUCTURE, TYPE AND SIZE PER PLAN. PROVIDE APRON PER DETAIL ON DWG 3.23 WHERE INDICATED.
16. LIGHT POLE, SEE ILLUMINATION PLANS (DWG 5.01–5.10) FOR DETAILS.
17. INSTALL VEGETATED DISPERSION STRIP PER DETAIL ON DWG 3.22.
18. REPLACE EXIST. CULVERT WITH NEW CULVERT PER DETAIL ON DWG 3.23.
19. INSTALL GRAVEL SHOULDER WITH INFILTRATION TRENCH PER DETAIL ON DWG 3.22.
20. EXISTING FEATURES OR STRUCTURE TO REMAIN, PROTECT DURING CONSTRUCTION.
21. EXISTING UTILITY TO REMAIN, PROTECT DURING CONSTRUCTION.
22. EXISTING UTILITY TO BE RELOCATED OR ADJUSTED TO FINISHED GRADE BY OTHERS.
23. ADJUST EXISTING UTILITY BOX TO FINISHED GRADE. REPLACE EXISTING LID WITH NON–SKID LID AND ROTATE TO ALIGN WITH SCORING IF LOCATED WITHIN NEW CEMENT CONCRETE PAVING.
24. REINSTALL SALVAGED BOLLARD PER COR STD DETAIL 911.
25. INSTALL RETAINING WALL PER DETAILS ON DWG 3.21.
26. SEE BRIDGE PLANS (DWG 4.01–4.13) FOR IMPROVEMENTS.
27. SEE HARDSCAPE/URBAN DESIGN PLANS (DWG 6.01–6.43) FOR DETAILS.
28. INSTALL BI–AXIAL GEOGRID AT PAVEMENT TRANSITIONS PER DETAIL ON DWG 3.18.
29. INSTALL SAFETY RAIL OR CHAINLINK FENCE PER HARDSCAPE/URBAN DESIGN PLANS (DWG 6.01–6.43).
30. REPLACE AND RESET EXISTING SURVEY BENCH MARK, SEE SPECIFICATIONS FOR REQUIREMENTS.
31. CONSTRUCT LANDSCAPE BERM WITH EXCESS MATERIAL EXCAVATED FROM SITE TO APPROX. SIZE AND HEIGHT AS SHOWN.
32. POTHOLE EXISTING UTILITY CROSSING AND NOTIFY THE ENGINEER IF CONFLICTS EXIST.

GENERAL NOTES

1. ALL DIMENSIONS AND STATION AND OFFSET REFERENCES ARE TO FACE OF CURB UNLESS NOTED OTHERWISE.

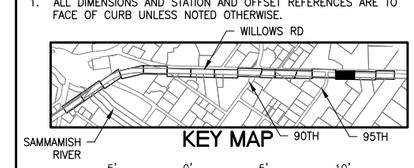

VERT. SCALE 5' 0' 5' 10' IN FEET

HORZ. SCALE 20' 0' 20' 40' IN FEET

CALL BEFORE YOU DIG 1–800–424–5555

CityofRedmond WASHINGTON

CITY OF REDMOND
PUBLIC WORKS DEPARTMENT
15670 NE 85TH STREET – REDMOND, WA 98073–9710

Redmond Central Connector
Phase II
City Project No. 20021314
Federal Aid No. CM–1065(011)

otak
Hammi Global Partner
11241 Willows Road NE
Suite 200
Redmond, Washington 98052
Phone: (425) 822–4446
FAX: (425) 827–9577
www.otak.com

DESIGN ENGR.	DRAWN	CHECKED
TP/SW	AK/EW	NV/DS

NO.	REVISION COMMENTS	BY	REVIEW	DATE

NICO M. VANDERGRAFT
STATE OF WASHINGTON
30792
REGISTERED PROFESSIONAL ENGINEER
1/14/16

TRAIL AND DRAINAGE PLAN AND PROFILE

January 2016

PROJECT NO.
OTAK 32246

SHEET: 27 OF: 111

DRAWING NO.
3.14

Plotted: Jan 14, 2016 – 9:35am touta K:\project\32200\32246\Dwg\3.01–3.16.dwg Layout Name: 3.14

XREF LIST
Ltscale: 1
Resolved
TTLBLK
C246R500
C246R270
C246N036
C246R900
C246U630
T246X800
RCC II_BASE_TBP
C246G450
S246B190
S246Y220

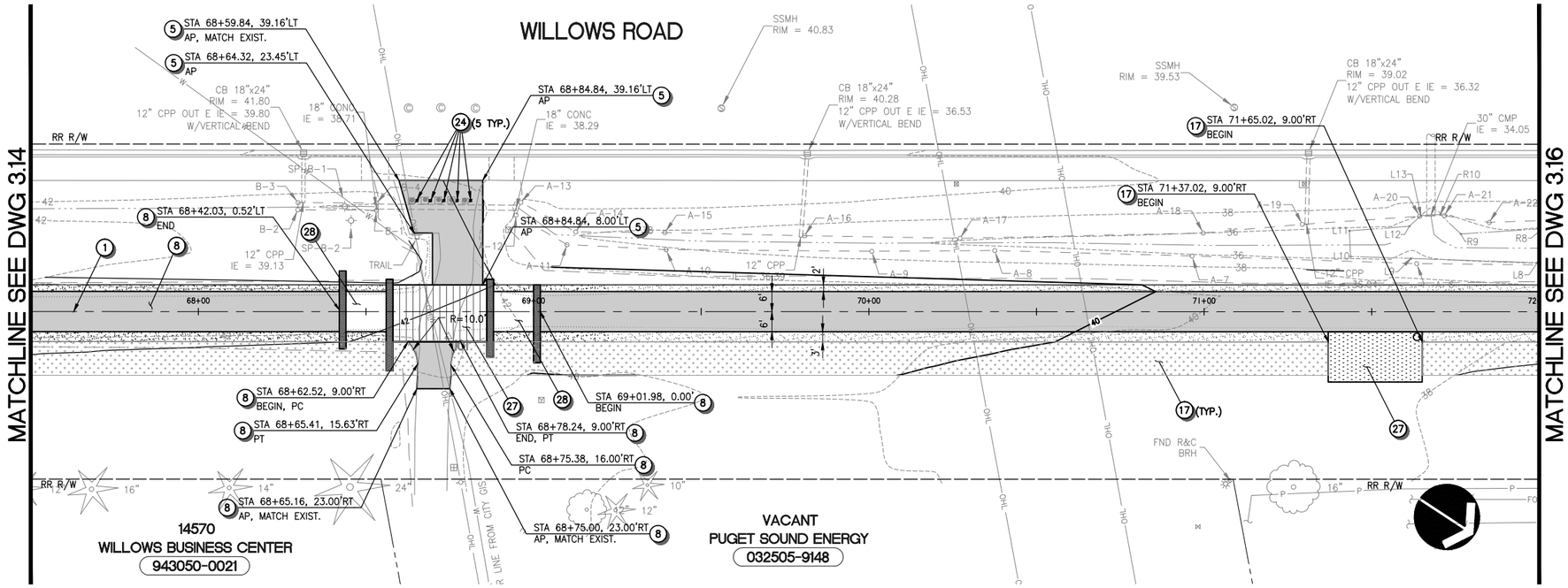

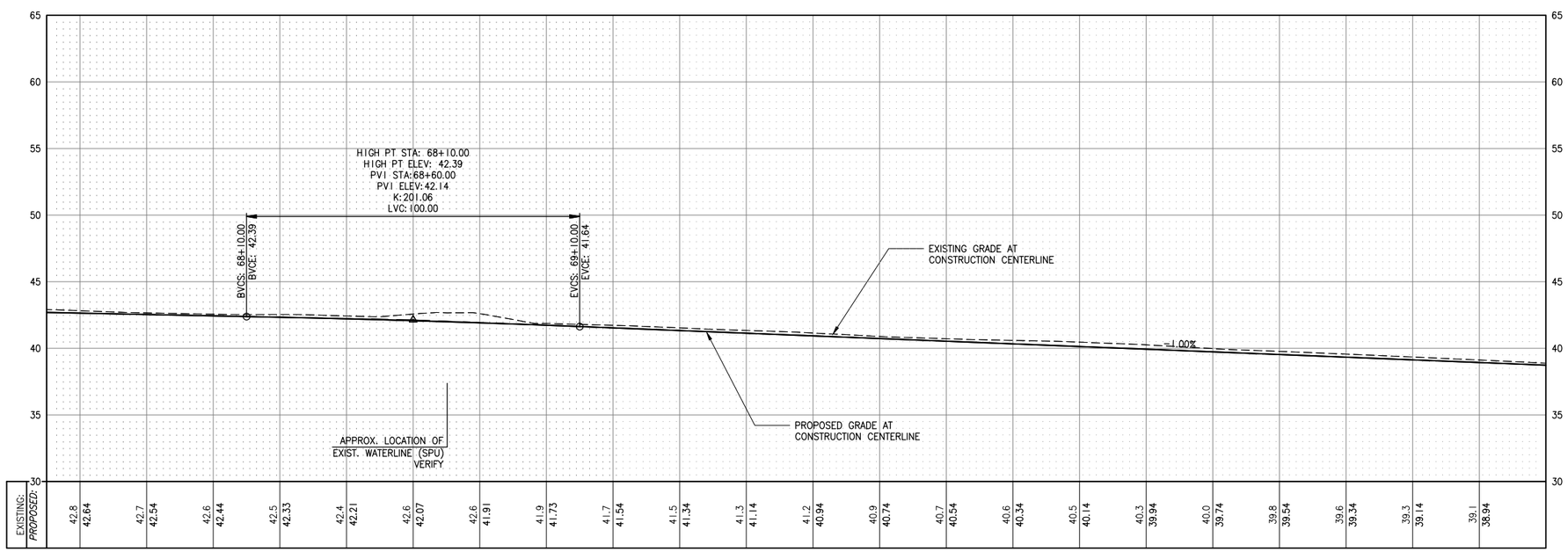

CONSTRUCTION NOTES

1. CONSTRUCTION CENTERLINE, SEE DWGS 1.03–1.04 FOR DETAILS.
2. INSTALL CEMENT CONCRETE CURB AND GUTTER TYPE "A" PER COR STD DETAIL NO. 304.
3. INSTALL CEMENT CONCRETE SIDEWALK PER COR STD DETAIL NO. 303.
4. INSTALL SIDEWALK RAMP, SEE DWGS 3.19–3.20 FOR LAYOUT.
5. RECONSTRUCT DRIVEWAY TO THE LIMITS SHOWN. SEE DWG 3.17 FOR PAVEMENT SECTION AND DWG 3.18 FOR PROFILE.
6. RECONSTRUCT ASPHALT PAVEMENT PER TYPICAL ROADWAY SECTION ON DWG 3.17, LIMITS PER PLAN.
7. INSTALL EXTRUDED CURB PER COR STD DETAIL NO. 304A.
8. CONSTRUCT HMA PAVEMENT TRAIL PER SECTION ON DWG 3.17.
9. CONSTRUCT POROUS PAVEMENT TRAIL PER SECTION ON DWG 3.17.
10. CONNECT TO EXISTING STORM DRAIN.
11. REPLACE EXISTING FRAME AND GRATE PER COR STD DETAIL NO. 631.
12. ADJUST EXISTING CATCH BASIN OR MANHOLE TO FINISHED GRADE. ROTATE GRATE OR COVER TO ALIGN WITH SCORING IF LOCATED WITHIN NEW CEMENT CONCRETE PAVING.
13. INSTALL PIPE INLET PROTECTION PER DETAIL ON DWG 3.22.
14. INSTALL PIPE OUTFALL PROTECTION PER DETAIL ON DWG 3.22.
15. INSTALL DRAINAGE STRUCTURE, TYPE AND SIZE PER PLAN. PROVIDE APRON PER DETAIL ON DWG 3.23 WHERE INDICATED.
16. LIGHT POLE, SEE ILLUMINATION PLANS (DWG 5.01–5.10) FOR DETAILS.
17. INSTALL VEGETATED DISPERSION STRIP PER DETAIL ON DWG 3.22.
18. REPLACE EXIST. CULVERT WITH NEW CULVERT PER DETAIL ON DWG 3.23.
19. INSTALL GRAVEL SHOULDER WITH INFILTRATION TRENCH PER DETAIL ON DWG 3.22.
20. EXISTING FEATURES OR STRUCTURE TO REMAIN, PROTECT DURING CONSTRUCTION.
21. EXISTING UTILITY TO REMAIN, PROTECT DURING CONSTRUCTION.
22. EXISTING UTILITY TO BE RELOCATED OR ADJUSTED TO FINISHED GRADE BY OTHERS.
23. ADJUST EXISTING UTILITY BOX TO FINISHED GRADE. REPLACE EXISTING LID WITH NON-SKID LID AND ROTATE TO ALIGN WITH SCORING IF LOCATED WITHIN NEW CEMENT CONCRETE PAVING.
24. REINSTALL SALVAGED BOLLARD PER COR STD DETAIL 911.
25. INSTALL RETAINING WALL PER DETAILS ON DWG 3.21.
26. SEE BRIDGE PLANS (DWG 4.01–4.13) FOR IMPROVEMENTS.
27. SEE HARDSCAPE/URBAN DESIGN PLANS (DWG 6.01–6.43) FOR DETAILS.
28. INSTALL BI-AXIAL GEOGRID AT PAVEMENT TRANSITIONS PER DETAIL ON DWG 3.18.
29. INSTALL SAFETY RAIL OR CHAINLINK FENCE PER HARDSCAPE/URBAN DESIGN PLANS (DWG 6.01–6.43).
30. REPLACE AND RESET EXISTING SURVEY BENCH MARK, SEE SPECIFICATIONS FOR REQUIREMENTS.
31. CONSTRUCT LANDSCAPE BERM WITH EXCESS MATERIAL EXCAVATED FROM SITE TO APPROX. SIZE AND HEIGHT AS SHOWN.
32. POTHOLE EXISTING UTILITY CROSSING AND NOTIFY THE ENGINEER IF CONFLICTS EXIST.

GENERAL NOTES

1. ALL DIMENSIONS AND STATION AND OFFSET REFERENCES ARE TO FACE OF CURB UNLESS NOTED OTHERWISE.

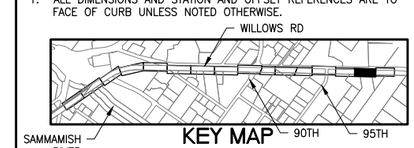

KEY MAP

VERT. SCALE 5' 0' 5' 10' IN FEET

HORZ. SCALE 20' 0' 20' 40' IN FEET

CALL BEFORE YOU DIG 1-800-424-5555

CityofRedmond WASHINGTON

CITY OF REDMOND
PUBLIC WORKS DEPARTMENT
15670 NE 85TH STREET – REDMOND, WA 98073-9710

Redmond Central Connector
Phase II
City Project No. 20021314
Federal Aid No. CM-1065(011)

otak
Hammi/Global Partner
11241 Willows Road NE
Suite 200
Redmond, Washington 98052
Phone: (425) 822-4446
FAX: (425) 827-9577
www.otak.com

DESIGN ENGR.	DRAWN	CHECKED
TP/SW	AK/EW	NV/DS

NO.	REVISION COMMENTS	BY	REVIEW	DATE

NICO M. VANDERGRAFT, STATE OF WASHINGTON, 30792, REGISTERED PROFESSIONAL ENGINEER
1/14/16

TRAIL AND DRAINAGE PLAN AND PROFILE

January 2016

PROJECT NO. OTAK 32246
SHEET: 28 OF: 111
DRAWING NO. 3.15

Plotted: Jan 14, 2016 – 9:35am touta K:\project\32200\32246\Dwg\3.01-3.16.dwg Layout Name: 3.15

XREF LIST
Ltscale: 1
Resolved
TTLBLK
C246R500
C246R270
C246N036
C246R900
C246U630
T246X800
RCC II_BASE_TBP
C246G450
S246B190
S246Y220

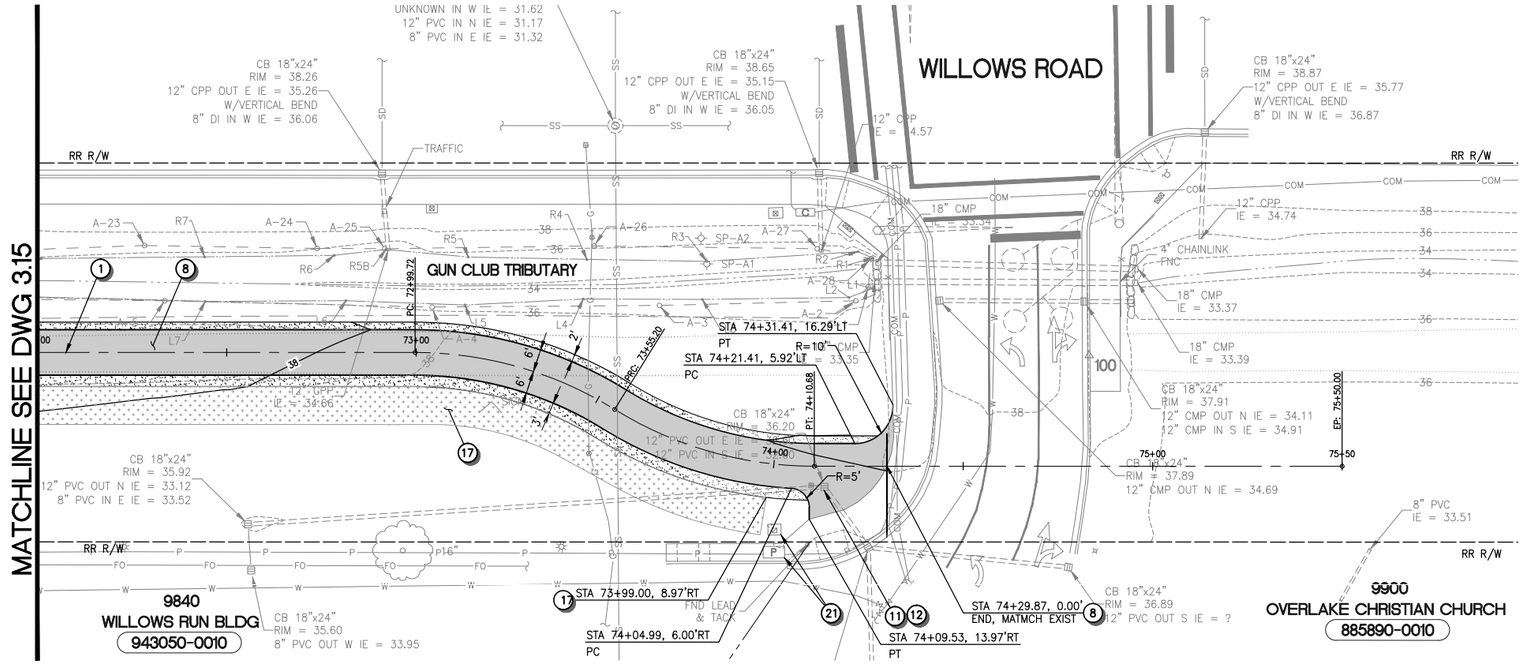

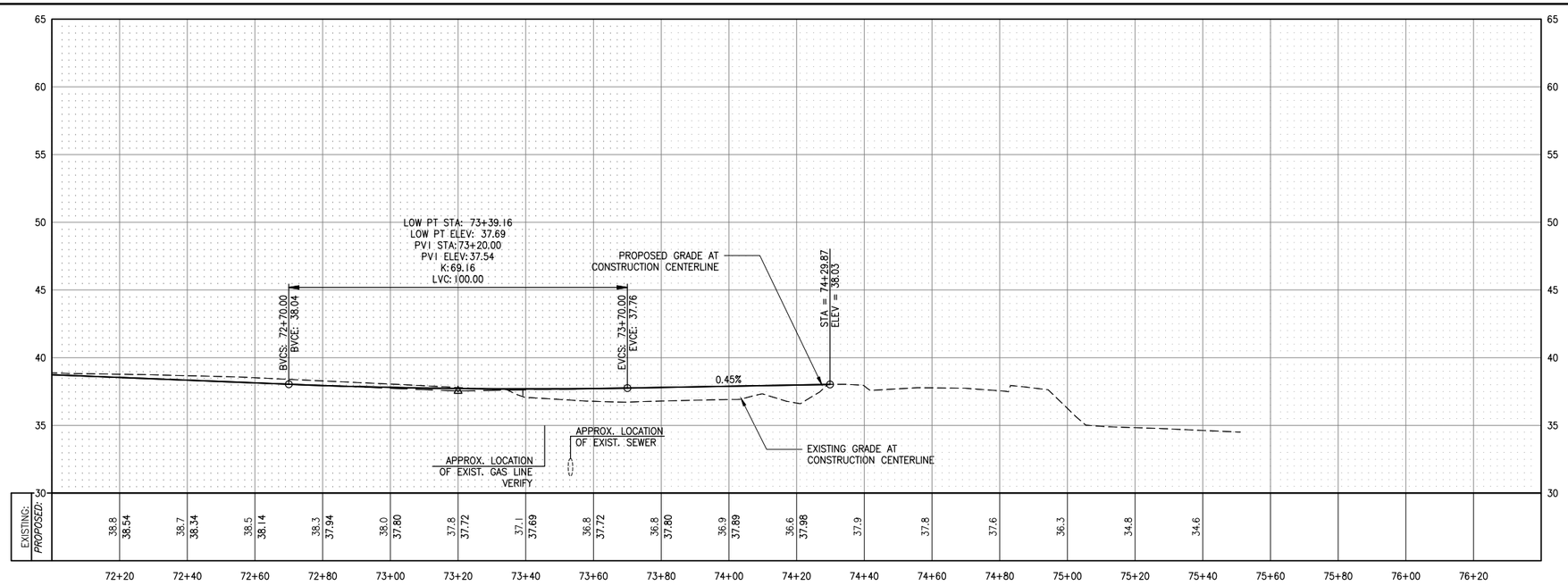

CONSTRUCTION NOTES

1. CONSTRUCTION CENTERLINE, SEE DWGS 1.03–1.04 FOR DETAILS.
2. INSTALL CEMENT CONCRETE CURB AND GUTTER TYPE "A" PER COR STD DETAIL NO. 304.
3. INSTALL CEMENT CONCRETE SIDEWALK PER COR STD DETAIL NO. 303.
4. INSTALL SIDEWALK RAMP, SEE DWGS 3.19–3.20 FOR LAYOUT.
5. RECONSTRUCT DRIVEWAY TO THE LIMITS SHOWN. SEE DWG 3.17 FOR PAVEMENT SECTION AND DWG 3.18 FOR PROFILE.
6. RECONSTRUCT ASPHALT PAVEMENT PER TYPICAL ROADWAY SECTION ON DWG 3.17, LIMITS PER PLAN.
7. INSTALL EXTRUDED CURB PER COR STD DETAIL NO. 304A.
8. CONSTRUCT HMA PAVEMENT TRAIL PER SECTION ON DWG 3.17.
9. CONSTRUCT POROUS PAVEMENT TRAIL PER SECTION ON DWG 3.17.
10. CONNECT TO EXISTING STORM DRAIN.
11. REPLACE EXISTING FRAME AND GRATE PER COR STD DETAIL NO. 631.
12. ADJUST EXISTING CATCH BASIN OR MANHOLE TO FINISHED GRADE. ROTATE GRATE OR COVER TO ALIGN WITH SCORING IF LOCATED WITHIN NEW CEMENT CONCRETE PAVING.
13. INSTALL PIPE INLET PROTECTION PER DETAIL ON DWG 3.22.
14. INSTALL PIPE OUTFALL PROTECTION PER DETAIL ON DWG 3.22.
15. INSTALL DRAINAGE STRUCTURE, TYPE AND SIZE PER PLAN. PROVIDE APRON PER DETAIL ON DWG 3.23 WHERE INDICATED.
16. LIGHT POLE, SEE ILLUMINATION PLANS (DWG 5.01–5.10) FOR DETAILS.
17. INSTALL VEGETATED DISPERSION STRIP PER DETAIL ON DWG 3.22.
18. REPLACE EXIST. CULVERT WITH NEW CULVERT PER DETAIL ON DWG 3.23.
19. INSTALL GRAVEL SHOULDER WITH INFILTRATION TRENCH PER DETAIL ON DWG 3.22.
20. EXISTING FEATURES OR STRUCTURE TO REMAIN, PROTECT DURING CONSTRUCTION.
21. EXISTING UTILITY TO REMAIN, PROTECT DURING CONSTRUCTION.
22. EXISTING UTILITY TO BE RELOCATED OR ADJUSTED TO FINISHED GRADE BY OTHERS.
23. ADJUST EXISTING UTILITY BOX TO FINISHED GRADE. REPLACE EXISTING LID WITH NON–SKID LID AND ROTATE TO ALIGN WITH SCORING IF LOCATED WITHIN NEW CEMENT CONCRETE PAVING.
24. REINSTALL SALVAGED BOLLARD PER COR STD DETAIL 911.
25. INSTALL RETAINING WALL PER DETAILS ON DWG 3.21.
26. SEE BRIDGE PLANS (DWG 4.01–4.13) FOR IMPROVEMENTS.
27. SEE HARDSCAPE/URBAN DESIGN PLANS (DWG 6.01–6.43) FOR DETAILS.
28. INSTALL BI–AXIAL GEOGRID AT PAVEMENT TRANSITIONS PER DETAIL ON DWG 3.18.
29. INSTALL SAFETY RAIL OR CHAINLINK FENCE PER HARDSCAPE/URBAN DESIGN PLANS (DWG 6.01–6.43).
30. REPLACE AND RESET EXISTING SURVEY BENCH MARK, SEE SPECIFICATIONS FOR REQUIREMENTS.
31. CONSTRUCT LANDSCAPE BERM WITH EXCESS MATERIAL EXCAVATED FROM SITE TO APPROX. SIZE AND HEIGHT AS SHOWN.
32. POTHOLE EXISTING UTILITY CROSSING AND NOTIFY THE ENGINEER IF CONFLICTS EXIST.

GENERAL NOTES

1. ALL DIMENSIONS AND STATION AND OFFSET REFERENCES ARE TO FACE OF CURB UNLESS NOTED OTHERWISE.

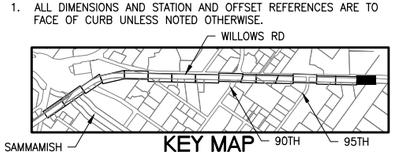

VERT. SCALE: 5' 0' 5' 10' IN FEET
HORZ. SCALE: 20' 0' 20' 40' IN FEET

CALL BEFORE YOU DIG 1–800–424–5555

City of Redmond WASHINGTON

CITY OF REDMOND
PUBLIC WORKS DEPARTMENT
15670 NE 85TH STREET – REDMOND, WA 98073–9710

Redmond Central Connector
Phase II
City Project No. 20021314
Federal Aid No. CM–1065(011)

otak
Hammi Global Partner
11241 Willows Road NE
Suite 200
Redmond, Washington 98052
Phone: (425) 822–4446
FAX: (425) 827–9577
www.otak.com

DESIGN ENGR.	DRAWN	CHECKED
TP/SW	AK/EW	NV/DS

NO.	REVISION COMMENTS	BY	REVIEW	DATE

NICO M. VANDERVORST
STATE OF WASHINGTON
30792
REGISTERED PROFESSIONAL ENGINEER
1/14/16

TRAIL AND DRAINAGE PLAN AND PROFILE

January 2016

PROJECT NO. OTAK 32246
SHEET: 29 OF: 111
DRAWING NO. 3.16

Plotted: Jan 14, 2016 – 9:35am touta K:\project\32200\32246\Dwg\3.01–3.16.dwg Layout Name: 3.16

XREF LIST
Ltscale: 1
Resolved
ttlblk

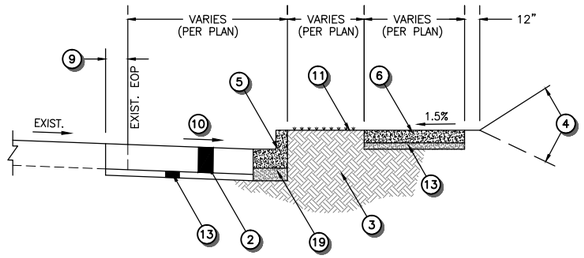

TYPICAL ROADWAY RECONSTRUCTION SECTION

NOT TO SCALE

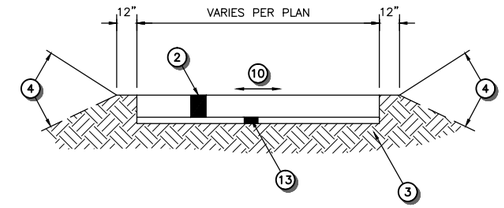

STA 39+67 TO 39+92, STA 51+65 TO 51+99

TYPICAL DRIVEWAY RECONSTRUCTION SECTION

NOT TO SCALE

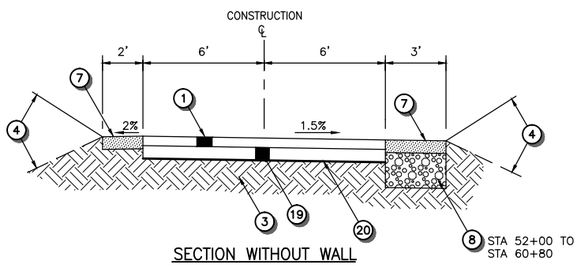

SECTION WITHOUT WALL

STA 6+69 TO 8+50, STA 41+20 TO 44+51, STA 47+83 TO 50+66
STA 52+72 TO 60+06, STA 62+85 TO 68+42, STA 69+02 TO 74+30

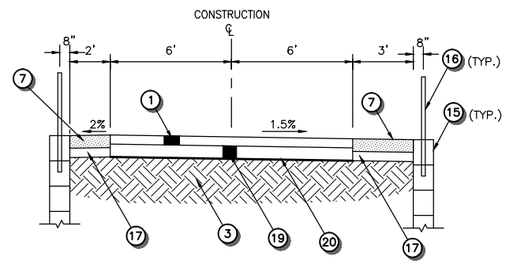

SECTION WITH WALL

STA 8+50 TO 9+38, STA 12+26 TO 13+27

SEE DWG 6.09 FOR URBAN DESIGN CROSS SECTION DETAILS FOR THE FOLLOWING STATIONS
STA 38+35 TO 39+67
STA 39+92 TO 41+20
STA 44+51 TO 47+83
STA 50+66 TO 51+65
STA 51+99 TO 52+72
STA 60+06 TO 62+85
STA 68+42 TO 69+02

SEE DWG 4.08 AND 4.13 FOR BRIDGE CROSS SECTION DETAILS FOR THE FOLLOWING STATIONS
STA 9+70 TO 11+93
STA 13+27 TO 14+97

HMA PAVEMENT TRAIL SECTION

NOT TO SCALE

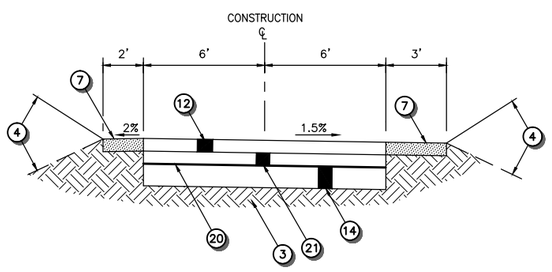

SECTION WITHOUT WALL

STA 18+60 TO 25+40, STA 26+20 TO 27+50, STA 29+60 TO 38+35

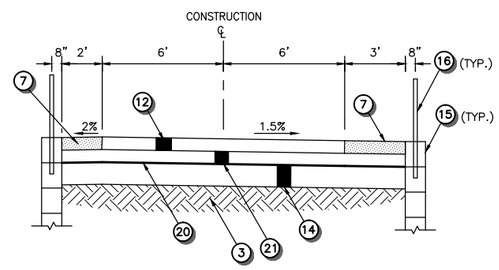

SECTION WITH WALL

STA 14+97 TO 18+60, STA 25+40 TO 26+60, STA 27+50 TO 29+60

POROUS PAVEMENT TRAIL SECTION

NOT TO SCALE

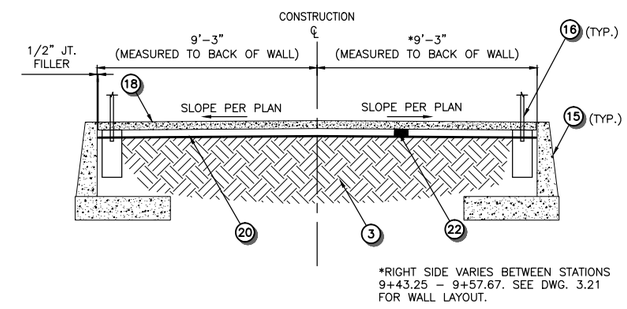

*RIGHT SIDE VARIES BETWEEN STATIONS 9+43.25 – 9+57.67. SEE DWG. 3.21 FOR WALL LAYOUT.

STA 9+38 TO 9+70, STA 11+93 TO 12+26

CONCRETE PAVEMENT TRAIL SECTION (SAMMAMISH RIVER BRIDGE APPROACHES)

NOT TO SCALE

TYPICAL ROADWAY AND TRAIL SECTION NOTES

1. 3" HMA, CLASS 1/2" PG 64–22.
2. 9" HMA, CLASS 1/2" PG 64–22 OR MATCH EXISTING.
3. SUBGRADE COMPACTED TO 95% OF MAXIMUM DENSITY PER ASTM D–1557. SUBGRADE TO CONSIST OF UNDISTURBED NATIVE MATERIALS OR STRUCTURAL FILL. STRUCTURAL FILL MATERIAL TO CONSIST OF SUITABLE ON–SITE MATERIALS OR GRAVEL BORROW AS DESCRIBED IN SPECIFICATIONS.
4. FINISHED GRADE NOT STEEPER THAN 3H:1V UNLESS NOTED OTHERWISE.
5. CEMENT CONCRETE CURB AND GUTTER, CURB TYPE PER PLAN.
6. CEMENT CONCRETE SIDEWALK, WIDTH AND LOCATION AS SPECIFIED ON PLANS.
7. GRAVEL SHOULDER, 4" CLEAN GRAVEL. FINISHED GRADE OF SHOULDER SHALL BE 1/4–INCH BELOW THE FINISHED GRADE OF THE PAVEMENT IN ALL SHOULDER AREAS. SEE SPECIAL PROVISIONS FOR GRAVEL SHOULDER MATERIAL SPECIFICATIONS.
8. GRAVEL SHOULDER WITH INFILTRATION TRENCH PER DETAIL ON DWG 3.22, LOCATION PER PLAN.
9. SAWCUT 24" MIN. FROM EDGE OF EXISTING PAVEMENT, UNLESS OTHERWISE SHOWN ON PLAN.
10. MATCH EXISTING ROADWAY CROSS–SLOPE UNLESS OTHERWISE SHOWN ON PLAN.
11. PLANTER STRIP, WIDTH AND LOCATION AS SPECIFIED ON PLANS.
12. 4" POROUS ASPHALT CONCRETE PAVEMENT, CLASS 1/2" PG 70–22.
13. 2" CRUSHED SURFACING TOP COURSE.
14. 7" PERMEABLE BALLAST BASE COURSE.
15. RETAINING WALL, LOCATION PER PLAN. SEE DETAIL ON DWG 3.21.
16. RAILING OR FENCING, LOCATION PER PLAN.
17. BACKFILL WITH CRUSHED SURFACING TOP COURSE.
18. 4" CAST–IN–PLACE CONCRETE PAVEMENT WITH SURFACE FINISHING PER HARDSCAPE/URBAN DESIGN PLANS DWG 6.09.
19. 4" CRUSHED SURFACING TOP COURSE.
20. INSTALL BIAXIAL GEOGRID LAYER (13'Wx30'L) WHERE INDICATED ON PLANS AT PAVEMENT TRANSITIONS, SEE DWG 3.18 FOR LIMITS.
21. 4" CRUSHED SURFACING BASE COURSE.
22. 3" CRUSHED SURFACING TOP COURSE.

GENERAL NOTES

1. ALL DEPTHS SHOWN ARE MINIMUM COMPACTED DEPTHS.
2. SEE TRAIL AND DRAINAGE PLANS FOR LAYOUT.
3. THE FINISHED GRADE CONTOURS SHOWN CORRESPOND TO FINISHED PAVEMENT GRADES AND FINISHED TRANSITION GRADES. SPOT ELEVATIONS SHOWN ARE TO TOP OF PAVEMENT OR FLOWLINE UNLESS OTHERWISE NOTED.
4. ALL COMPACTION SHALL BE 95% OF MAXIMUM DENSITY PER ASTM D–1557.

CALL BEFORE YOU DIG 1–800–424–5555

CityofRedmond WASHINGTON

CITY OF REDMOND
PUBLIC WORKS DEPARTMENT
15670 NE 85TH STREET – REDMOND, WA 98073–9710

Redmond Central Connector
Phase II
City Project No. 20021314
Federal Aid No. CM–1065(011)

otak
Hamm/Global Partner
11241 Willows Road NE
Suite 200
Redmond, Washington 98052
Phone: (425) 822–4446
FAX: (425) 827–9577
www.otak.com

DESIGN ENGR.	DRAWN	CHECKED
TP/SW	AK/EW	NV/DS

NO.	REVISION COMMENTS	BY	REVIEW	DATE

NICO A. VANDERKAMP, STATE OF WASHINGTON, 30792, REGISTERED PROFESSIONAL ENGINEER
1/14/16

TRAIL AND DRAINAGE DETAILS

January 2016

PROJECT NO. OTAK 32246
SHEET: 30 OF: 111
DRAWING NO. 3.17

Plotted: Jan 14, 2016 – 9:36am touia K:\project\32200\32246\Dwg\3.17.dwg Layout Name: 3.17

XREF LIST
Ltscale: 1
Resolved
TTLBLK
C246R502
C246R900

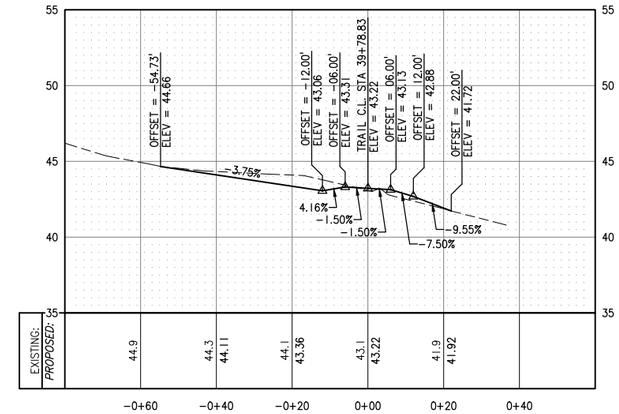

DRIVEWAY ℄ AT TRAIL STA 39+78.83 (BELL PROPERTIES)

SCALE: HORZ. 1" = 20'
VERT. 1" = 5'

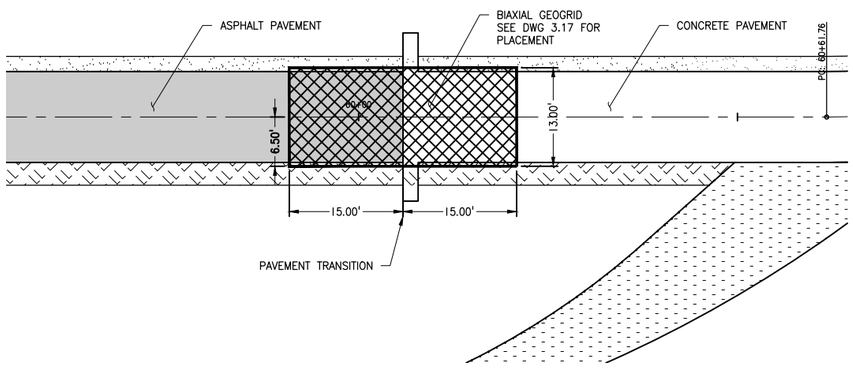

NOTES:
1. BIAXIAL GEOGRID SHALL HAVE A MINIMUM ULTIMATE TENSILE STRENGTH OF 850 LB/FT.
2. BIAXIAL GEOGRID SHALL BE ROLLED LONGITUDINALLY ALONG THE ALIGNMENT AT THE TRANSITION LOCATIONS.

TYPICAL BIAXIAL GEOGRID LIMITS AT PAVEMENT TRANSITION

NOT TO SCALE

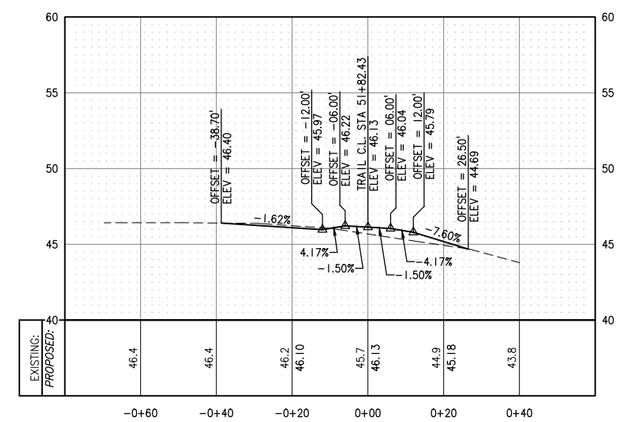

DRIVEWAY ℄ AT TRAIL STA 51+82.43 (ARENA SPORTS)

SCALE: HORZ. 1" = 20'
VERT. 1" = 5'

CALL BEFORE YOU DIG 1-800-424-5555

City of Redmond
WASHINGTON

CITY OF REDMOND
PUBLIC WORKS DEPARTMENT
15670 NE 85TH STREET - REDMOND, WA 98073-9710

Redmond Central Connector
Phase II
City Project No. 20021314
Federal Aid No. CM-1065(011)

otak
Hammi Global Partner
11241 Willows Road NE
Suite 200
Redmond, Washington 98052
Phone: (425) 822-4446
FAX: (425) 827-9577
www.otak.com

DESIGN ENGR.	DRAWN	CHECKED
TP/SW	AK/EW	NV/DS

NO.	REVISION COMMENTS	BY	REVIEW	DATE

NICO M. VANDERBEEKEN
STATE OF WASHINGTON
30792
REGISTERED
PROFESSIONAL ENGINEER
1/14/16

TRAIL AND DRAINAGE DETAILS

January 2016

PROJECT NO.
OTAK 32246

SHEET: 31 OF: 111

DRAWING NO.
3.18

Plotted: Jan 14, 2016 - 9:36am touta K:\project\32200\32246\Dwg\3.18.dwg Layout Name: 3.18

XREF LIST
Ltscale: 1
Resolved
ttlblk
C246R500
C246R270
S246B190
C246R501

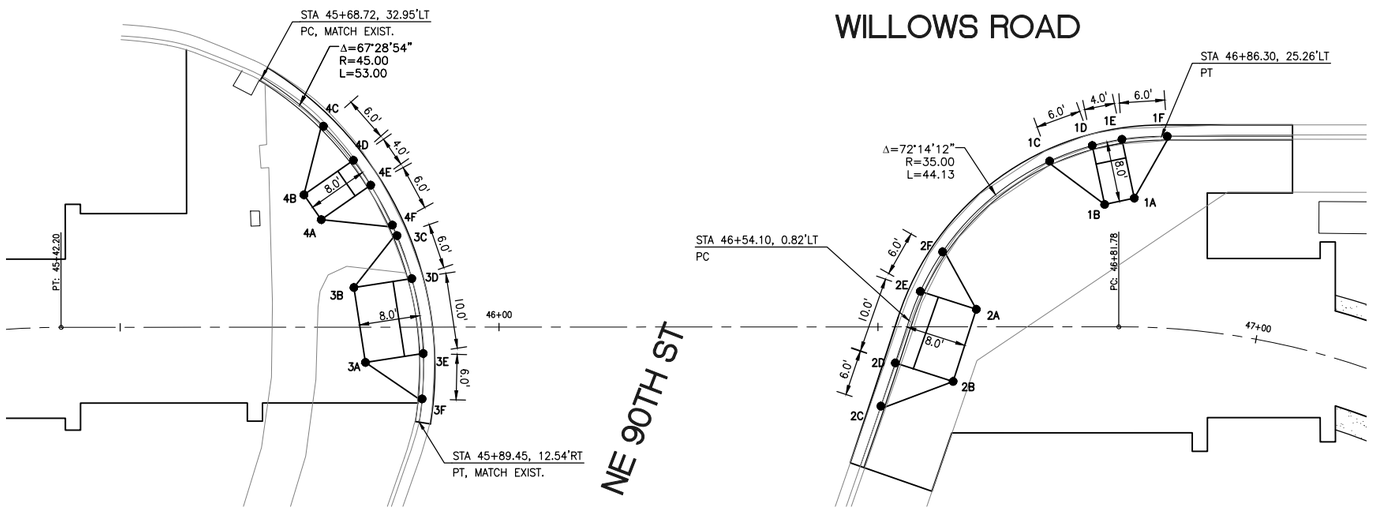

NE 90TH STREET		
POINT	STATION/OFFSET	ELEVATION
1A	46+83.54, 16.98LT	45.37'
1B	46+79.93, 16.14LT	45.36'
1C	46+72.67, 21.86LT	45.24' TOC 44.74' FL
1D	46+78.30, 23.92LT	44.78' FL
1E	46+82.13, 24.74LT	44.79' FL
1F	46+86.90, 25.29LT	45.28' TOC 44.78' FL
2A	46+62.98, 2.31LT	45.22'
2B	46+59.92, 7.21RT	45.20'
2C	46+50.39, 10.45RT	45.17' TOC 44.67' FL
2D	46+52.29, 4.76RT	44.72' FL
2E	46+55.60, 4.68LT	44.74' FL
2F	46+58.54, 9.90LT	45.25' TOC 44.74' FL

NE 90TH STREET		
POINT	STATION/OFFSET	ELEVATION
3A	45+82.37, 4.65RT	45.10'
3B	45+80.85, 5.24LT	45.13'
3C	45+86.54, 12.08LT	45.18' TOC 44.70' FL
3D	45+88.49, 6.40LT	44.67' FL
3E	45+90.00, 3.48RT	44.60' FL
3F	45+89.84, 9.48RT	45.08' TOC 44.57' FL
4A	45+76.54, 14.19LT	45.19'
4B	45+74.26, 17.47LT	45.20'
4C	45+76.84, 26.53LT	45.23' TOC 44.72' FL
4D	45+80.79, 22.02LT	44.72' FL
4E	45+83.07, 18.74LT	44.71' FL
4F	45+85.93, 13.47LT	45.19' TOC 44.70' FL

NE 90TH STREET

SCALE: 1" = 10'

CALL BEFORE YOU DIG 1-800-424-5555

City of Redmond
WASHINGTON

CITY OF REDMOND
PUBLIC WORKS DEPARTMENT
15670 NE 85TH STREET - REDMOND, WA 98073-9710

Redmond Central Connector
Phase II
City Project No. 20021314
Federal Aid No. CM-1065(011)

otak
Hamm/Global Partner

11241 Willows Road NE
Suite 200
Redmond, Washington 98052
Phone: (425) 822-4446
FAX: (425) 827-9577
www.otak.com

DESIGN ENGR.	DRAWN	CHECKED
TP/SW	AK/EW	NV/DS

NO.	REVISION COMMENTS	BY	REVIEW	DATE

NICO M. VANDERBERG
STATE OF WASHINGTON
30792
PROFESSIONAL ENGINEER
1/14/16

TRAIL AND DRAINAGE DETAILS

January 2016

PROJECT NO.
OTAK 32246

SHEET: 32 OF: 111

DRAWING NO.
3.19

Plotted: Jan 14, 2016 - 9:37am toala K:\project\32200\32246\Dwg\3.19-3.20.dwg Layout Name: 3.19

XREF LIST
Ltscale: 1
Resolved
ttlblk
C246R500
C246R270
S246B190
C246R501

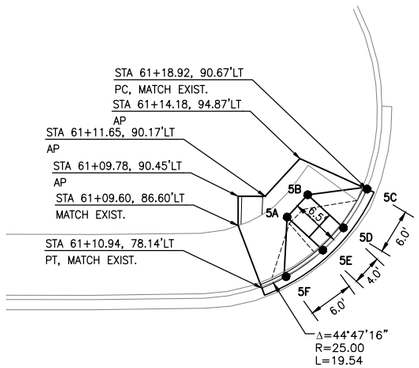

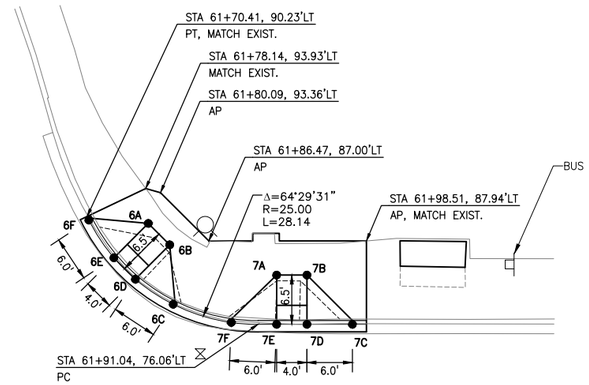

NE 95TH STREET		
POINT	STATION/OFFSET	ELEVATION
1A	61+96.74, 13.94LT	47.23'
1B	61+93.85, 11.62LT	47.18'
1C	61+86.43, 13.21LT	47.11' TOC 46.71' FL
1D	61+90.71, 16.98LT	46.82' FL
1E	61+93.52, 19.20LT	46.87' FL
1F	61+97.89, 22.07LT	47.38' TOC 46.98' FL
2A	61+88.42, 4.17LT	47.02'
2B	61+83.48, 4.52RT	46.88'
2C	61+74.93, 6.41RT	46.76' TOC 46.26' FL
2D	61+76.80, 0.71RT	46.41' FL
2E	61+81.74, 7.98LT	46.59' FL
2F	61+85.69, 12.49LT	47.10' TOC 46.69' FL

NE 95TH STREET		
POINT	STATION/OFFSET	ELEVATION
3A	61+23.24, 5.04RT	47.23'
3B	61+18.45, 3.74LT	47.38'
3C	61+21.32, 12.01LT	47.44' TOC 47.02' FL
3D	61+25.19, 7.43LT	46.90' FL
3E	61+29.98, 1.35RT	46.70' FL
3F	61+31.76, 7.08RT	47.08' TOC 46.58' FL
4A	61+12.32, 10.08LT	47.80'
4B	61+09.45, 12.49LT	47.86'
4C	61+09.22, 21.83LT	47.78' TOC 47.36' FL
4D	61+13.55, 18.87LT	47.24' FL
4E	61+16.35, 16.59LT	47.16' FL
4F	61+20.60, 12.73LT	47.46' TOC 47.04' FL

NE 95TH STREET		
POINT	STATION/OFFSET	ELEVATION
5A	61+13.10, 87.25LT	49.21'
5B	61+14.61, 90.06LT	49.28'
5C	61+18.92, 90.67LT	49.36' TOC 48.86' FL
5D	61+17.06, 85.58LT	48.79' FL
5E	61+15.55, 82.70LT	48.72' FL
5F	61+12.79, 79.41LT	48.99' TOC 48.49' FL
6A	61+78.49, 89.32LT	48.31'
6B	61+81.32, 86.49LT	48.27'
6C	61+81.78, 78.65LT	48.20' TOC 47.70' FL
6D	61+76.78, 81.95LT	47.78' FL
6E	61+73.95, 84.77LT	47.82' FL
6F	61+70.64, 89.76LT	48.38' TOC 47.88' FL

NE 95TH STREET		
POINT	STATION/OFFSET	ELEVATION
7A	61+92.30, 82.63LT	48.09'
7B	61+94.49, 82.83LT	48.08'
7C	61+98.09, 76.81LT	48.00' TOC 47.50' FL
7D	61+94.71, 76.34LT	47.59' FL
7E	61+92.44, 76.14LT	47.60' FL
7F	61+89.04, 76.25LT	48.10' TOC 47.60' FL

WILLOWS ROAD

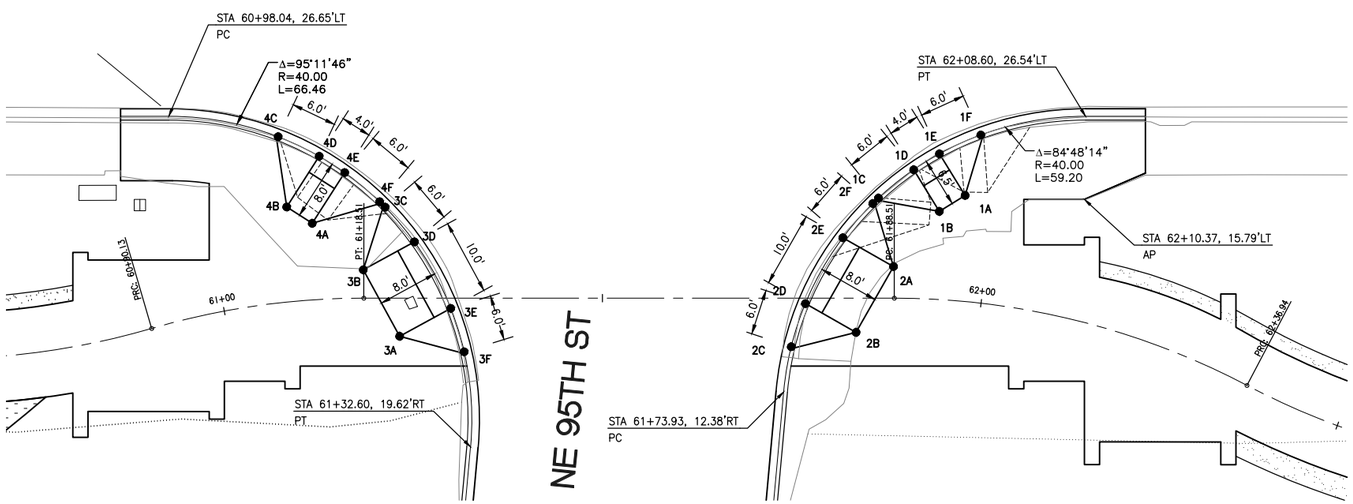

NE 95TH STREET

SCALE: 1" = 10'

CALL BEFORE YOU DIG 1-800-424-5555

CityofRedmond
WASHINGTON

CITY OF REDMOND
PUBLIC WORKS DEPARTMENT
15670 NE 85TH STREET – REDMOND, WA 98073-9710

Redmond Central Connector
Phase II
City Project No. 20021314
Federal Aid No. CM-1065(011)

otak
Hammel Global Partner
11241 Willows Road NE
Suite 200
Redmond, Washington 98052
Phone: (425) 822-4446
FAX: (425) 827-9577
www.otak.com

DESIGN ENGR.	DRAWN	CHECKED
TP/SW	AK/EW	NV/DS

NO.	REVISION COMMENTS	BY	REVIEW	DATE

NICO M. VANDERKEEN
STATE OF WASHINGTON
30792
REGISTERED PROFESSIONAL ENGINEER
1/14/16

TRAIL AND DRAINAGE DETAILS

January 2016

PROJECT NO. OTAK 32246
SHEET: 33 OF: 111
DRAWING NO. 3.20

Plotted: Jan 14, 2016 – 9:37am toda K:\project\32200\32246\Dwg\3.19-3.20.dwg Layout Name: 3.20

XREF LIST
Ltscale: 1
Resolved
ttlblk

GRAVITY BLOCK WALL NOTES:

1. MODULAR BLOCK WALL SHALL BE INSTALLED PER MANUFACTURER'S SPECIFICATIONS AND RECOMMENDATIONS.
2. TOP OF WALL SHALL BE STEPPED AS NECESSARY TO CONFORM TO FINISHED GRADE OF TRAIL.

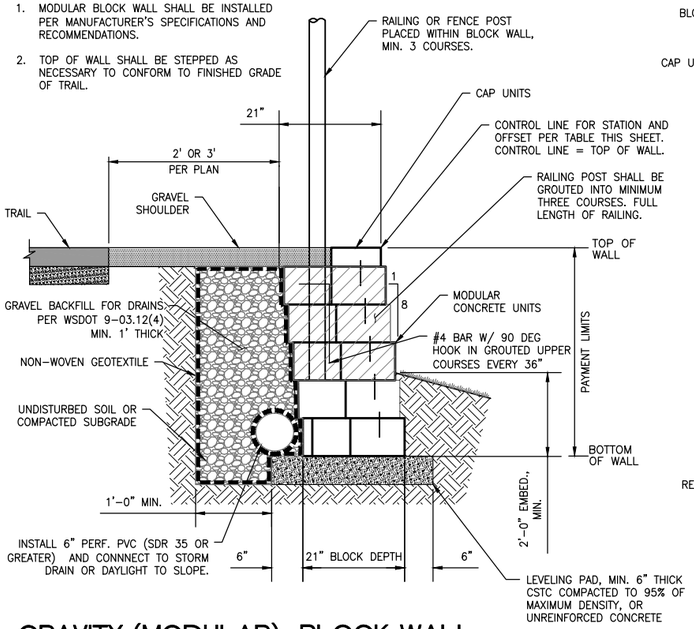

GRAVITY (MODULAR) BLOCK WALL

NOT TO SCALE

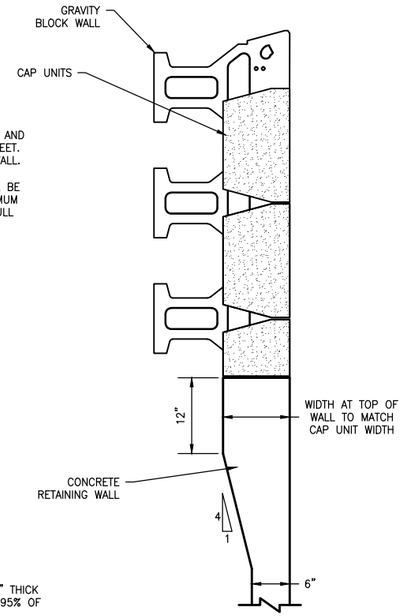

WALL TRANSITION

NOT TO SCALE

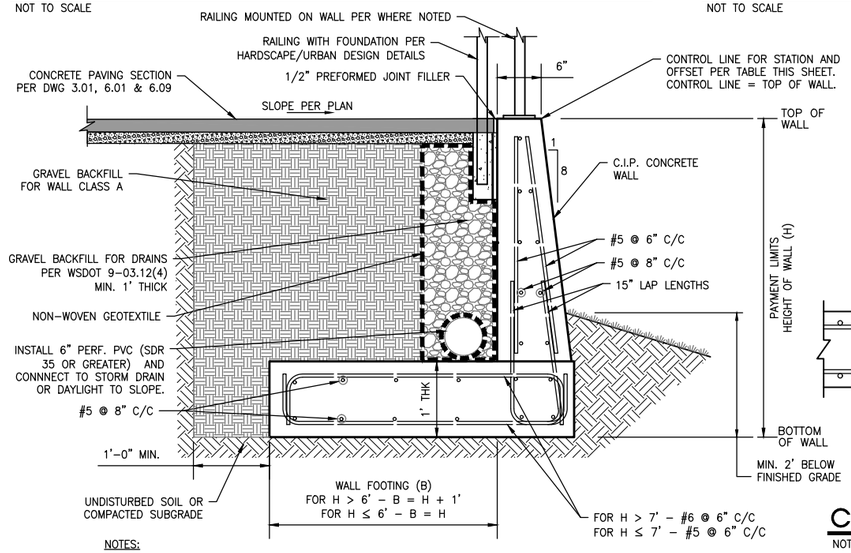

NOTES:

1. PLACE ONE CONTROL JOINT IN EACH WALL AT MIDPOINT ALONG LENGTH. PLACE AT ANGLE POINTS IN WALL 2.
2. SUBMIT REINFORCING STEEL SHOP DRAWINGS FOR REVIEW.
3. PROVIDE CLASS 1 SURFACE FINISH TO FRONT AND TOP OF WALL STEM (FULL HEIGHT).
4. MINIMUM CLEAR COVER TO REINFORCING SHALL BE 1½" AT ALL LOCATIONS.
5. WALL UNDERDRAIN TO BE INSTALLED CONTINUOUS ACROSS WALL TYPES. SLOPE TO BE MAINTAINED.

CAST IN PLACE CONCRETE RETAINING WALL

NOT TO SCALE

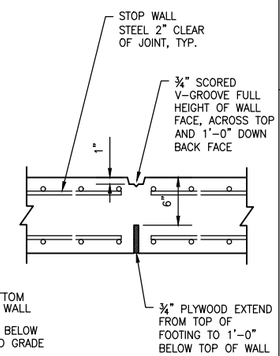

CONTROL JOINT

NOT TO SCALE

WALL #	STA.	OFFSET	TOP OF WALL	BOTTOM OF WALL	COMMENTS
WALL 1	8+50	10.75' RT	52.1'	49.2'	BEGIN GRAVITY TYPE
	8+60	10.75' RT	52.4'	49.3'	
	8+80	10.75' RT	53.2'	49.8'	
	9+00	10.75' RT	54.1'	50.3'	
	9+20	10.75' RT	54.7'	50.5'	
	9+44	10.75' RT	55.2'	50.5'	END GRAVITY TYPE
	9+44	10.75' RT	55.2'	50.5'	BEGIN CONCRETE TYPE
	9+45	10.75' RT	55.2'	50.5'	AP
	9+48	16.36' RT	55.6' *	46.5'	AP
	9+58	9.75' RT	55.6' *	51.0'	AP
	9+60	9.75' RT	55.6'	51.0'	
	9+70	9.75' RT	55.7'	50.0'	END CONCRETE TYPE
WALL 2	8+60	9.75' LT	52.6'	49.5'	BEGIN GRAVITY TYPE
	8+80	9.75' LT	53.5'	50.0'	
	9+00	9.75' LT	54.4'	50.5'	
	9+20	9.75' LT	55.0'	51.0'	
	9+32	9.75' LT	55.3'	51.3'	END GRAVITY TYPE
	9+32	9.75' LT	55.3'	51.3'	BEGIN CONCRETE TYPE
	9+40	9.75' LT	55.5'	51.5'	
	9+60	9.75' LT	55.7'	51.2'	
	9+70	9.75' LT	55.7'	50.9'	END CONCRETE TYPE
WALL 3	11+93	9.75' RT	55.5'	49.3'	BEGIN CONCRETE TYPE
	12+00	9.75' RT	55.5'	50.2'	
	12+20	9.75' RT	55.4'	50.9'	
	12+32	9.75' RT	55.4'	50.7'	END CONCRETE TYPE
	12+32	9.75' RT	55.4'	50.7'	BEGIN GRAVITY TYPE
	12+40	9.75' RT	55.3'	50.5'	
	12+60	9.75' RT	55.2'	50.7'	
	12+80	9.75' RT	55.1'	50.6'	
	13+00	9.75' RT	55.0'	50.7'	
	13+20	9.75' RT	54.9'	50.9'	
	13+27	9.75' RT	54.9'	49.4'	END GRAVITY TYPE
WALL 4	11+93	9.75' LT	55.7'	50.3'	BEGIN CONCRETE TYPE
	12+00	9.75' LT	55.7'	51.3'	
	12+21	9.75' LT	55.7'	52.2'	END CONCRETE TYPE
	12+21	9.75' LT	55.7'	52.2'	BEGIN GRAVITY TYPE
	12+40	9.75' LT	55.6'	51.8'	
	12+60	9.75' LT	55.5'	51.8'	
	12+80	9.75' LT	55.4'	51.7'	
	13+00	9.75' LT	55.3'	52.4'	
	13+20	9.75' LT	55.2'	52.4'	
	13+27	9.75' LT	55.2'	51.2'	END GRAVITY TYPE
WALL 5	15+00	10.75' RT	54.0'	50.1'	BEGIN GRAVITY TYPE
	15+20	10.75' RT	53.9'	49.8'	
	15+40	10.75' RT	53.8'	49.5'	
	15+60	10.75' RT	53.8'	49.0'	
	15+80	10.75' RT	53.8'	49.2'	
	16+00	10.75' RT	53.9'	49.2'	
	16+20	10.75' RT	53.9'	49.4'	
	16+40	10.75' RT	54.0'	49.6'	
	16+60	10.75' RT	54.0'	49.6'	
	16+80	10.75' RT	54.0'	50.2'	
	17+00	10.75' RT	54.0'	50.0'	
	17+20	10.75' RT	54.0'	49.7'	
	17+40	10.75' RT	53.9'	50.3'	
	17+60	10.75' RT	53.9'	50.4'	
	17+80	10.75' RT	53.9'	50.1'	
	18+00	10.75' RT	53.8'	50.1'	
	18+20	10.75' RT	53.8'	50.1'	
	18+40	10.75' RT	53.7'	50.4'	
	18+60	10.75' RT	53.7'	51.0'	END GRAVITY TYPE

WALL #	STA.	OFFSET	TOP OF WALL	BOTTOM OF WALL	COMMENTS
WALL 6	15+80	9.75' LT	54.1'	51.2'	BEGIN GRAVITY TYPE
	16+00	9.75' LT	54.1'	51.2'	
	16+20	9.75' LT	54.2'	51.0'	
	16+40	9.75' LT	54.2'	51.1'	
	16+60	9.75' LT	54.2'	51.6'	END GRAVITY TYPE
WALL 7	25+40	11.50' RT	50.4'	47.5'	BEGIN GRAVITY TYPE
	25+60	11.50' RT	50.2'	47.2'	
	25+80	11.50' RT	50.1'	47.0'	
	26+00	11.50' RT	50.0'	47.0'	
	26+20	11.50' RT	49.9'	47.0'	END GRAVITY TYPE
WALL 8	27+50	11.50' RT	49.3'	46.3'	BEGIN GRAVITY TYPE
	27+60	11.50' RT	49.2'	46.1'	
	27+80	11.50' RT	49.1'	45.7'	
	28+00	11.50' RT	49.0'	45.5'	
	28+20	11.50' RT	48.9'	45.4'	
	28+40	11.50' RT	48.8'	45.2'	
	28+60	11.50' RT	48.7'	45.1'	
	28+80	11.50' RT	48.6'	45.1'	
	29+00	11.50' RT	48.5'	45.0'	
	29+20	11.50' RT	48.4'	44.8'	
	29+40	11.50' RT	48.3'	44.8'	
	29+50	11.50' RT	48.2'	45.2'	END GRAVITY TYPE

* REFER TO SHEET 3.26 FOR TOP OF WALL ELEVATION AT STAIRS

WALL LAYOUT TABLE

NOT TO SCALE

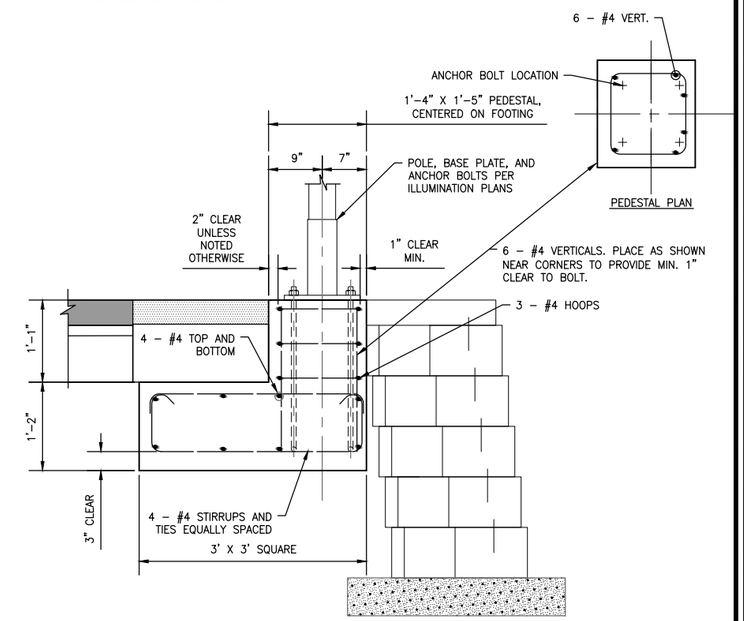

NOTES:

1. FILL VOID BETWEEN BACK OF BLOCKS AND FOOTING WITH GROUT OR CONCRETE. PLACE BOND BREAKER BETWEEN BLOCK AND ANY POURED CEMENTITIOUS MATERIAL.
2. PLACE FOOTING ON COMPACTED NATIVE SUBGRADE OR MATERIAL MEETING THE REQUIREMENTS OF GRAVEL BACKFILL FOR FOUNDATION CLASS A.
3. OMIT GRAVEL BACKFILL FOR WALL WITHIN LIMITS OF FOOTING.
4. CUT CAP BLOCK AS NECESSARY TO MAINTAIN BATTER OF WALL.
5. MAXIMUM AGGREGATE SIZE SHALL BE 1".

LIGHT POLE FOOTING ADJACENT TO BLOCK WALL

NOT TO SCALE

CALL BEFORE YOU DIG 1-800-424-5555

CityofRedmond WASHINGTON

CITY OF REDMOND
PUBLIC WORKS DEPARTMENT
15670 NE 85TH STREET - REDMOND, WA 98073-9710

Redmond Central Connector
Phase II
City Project No. 20021314
Federal Aid No. CM-1065(011)

otak
HammGlobal Partner
11241 Willows Road NE
Suite 200
Redmond, Washington 98052
Phone: (425) 822-4446
FAX: (425) 827-9577
www.otak.com

DESIGN ENGR.	DRAWN	CHECKED
TP/SW	AK/EW	NV/DS

NO.	REVISION COMMENTS	BY	REVIEW	DATE

STATE OF WASHINGTON STEPHEN J. WILSON 45633 PROFESSIONAL ENGINEER 1/14/16

TRAIL AND DRAINAGE DETAILS

January 2016

PROJECT NO. OTAK 32246
SHEET: 34 OF: 111
DRAWING NO. 3.21

Plotted: Jan 14, 2016 - 9:38am taata K:\project\32200\32246\Dwg\3.21.dwg Layout Name: 3.21

XREF LIST
Ltscale: 1
Resolved
ttlblk

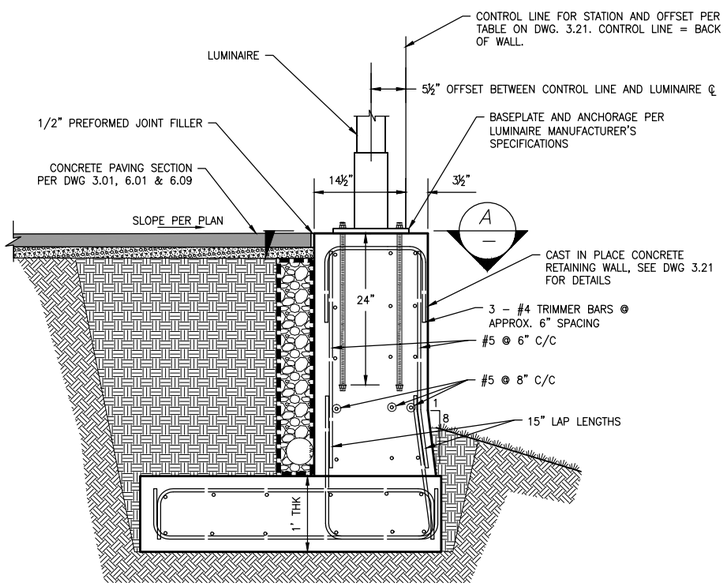

LUMINAIRE ON CONCRETE RETAINING WALL

NOT TO SCALE

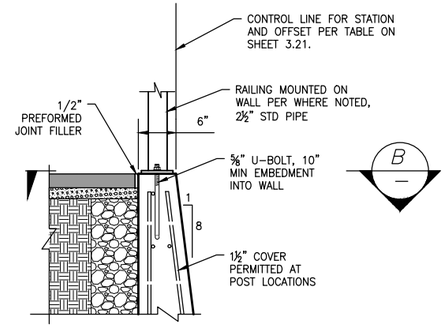

RAILING POST DETAIL

NOT TO SCALE

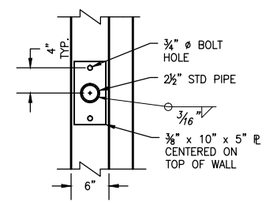

SECTION B – BASE PLATE PLAN

NOT TO SCALE

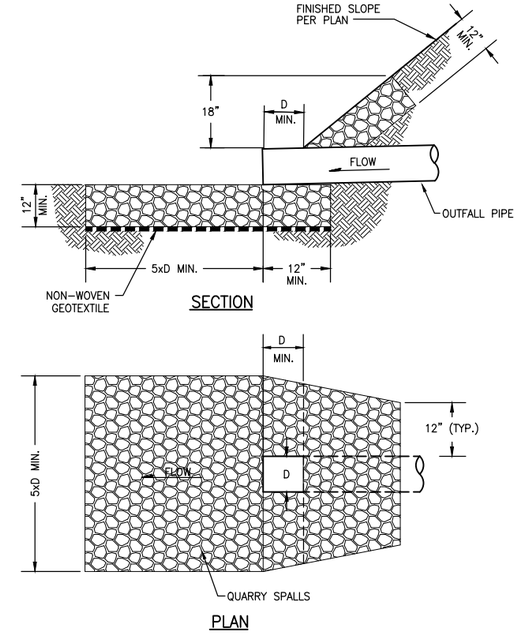

PIPE OUTFALL PROTECTION

NOT TO SCALE

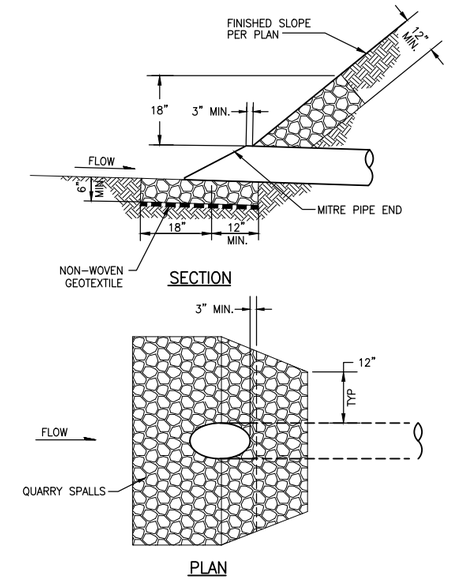

PIPE INLET PROTECTION

NOT TO SCALE

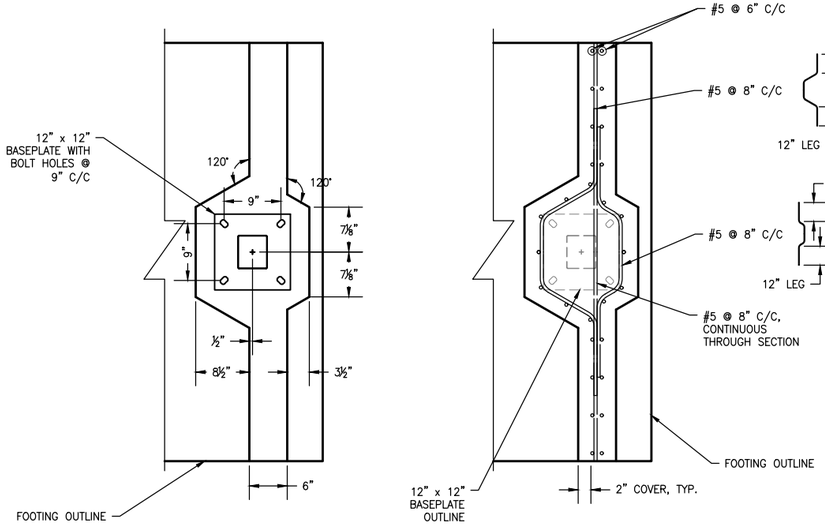

SECTION A – GEOMETRY AND REINFORCING DETAILS

NOT TO SCALE

NOTE: #4 TRIMMER BARS NOT SHOWN FOR CLARITY

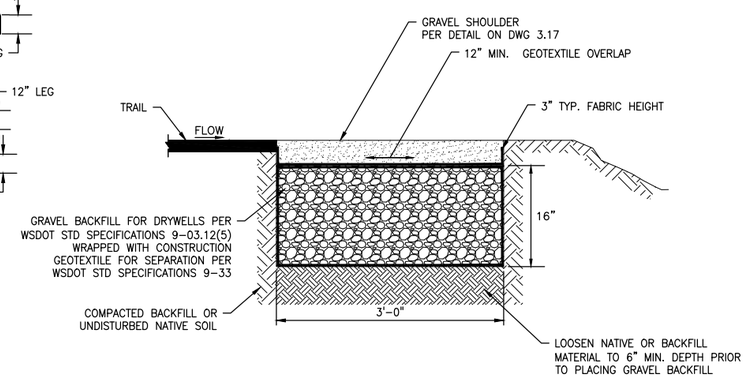

INFILTRATION TRENCH

NOT TO SCALE

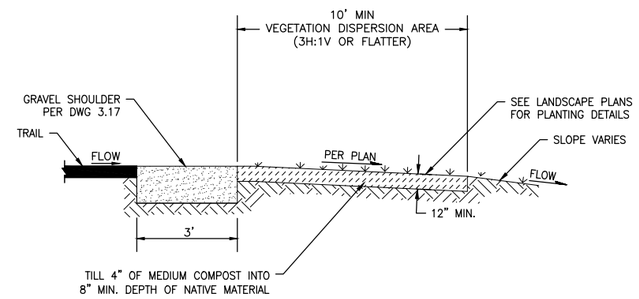

VEGETATED DISPERSION STRIP

NOT TO SCALE

CALL BEFORE YOU DIG 1-800-424-5555

City of Redmond
WASHINGTON

CITY OF REDMOND
PUBLIC WORKS DEPARTMENT
15670 NE 85TH STREET – REDMOND, WA 98073-9710

Redmond Central Connector
Phase II
City Project No. 20021314
Federal Aid No. CM-1065(011)

otak
Hammi Global Partner
11241 Willows Road NE
Suite 200
Redmond, Washington 98052
Phone: (425) 822-4446
FAX: (425) 827-9577
www.otak.com

DESIGN ENGR.	DRAWN	CHECKED
TP/SW	AK/EW	NV/DS

NO.	REVISION COMMENTS	BY	REVIEW	DATE

STEPHEN J. WILSON
STATE OF WASHINGTON
45633
PROFESSIONAL ENGINEER
1/14/16

TRAIL AND DRAINAGE DETAILS

January 2016

PROJECT NO.
OTAK 32246

SHEET: 35 OF: 111

DRAWING NO.
3.22

Plotted: Jan 14, 2016 – 9:38am toute K:\project\32200\32246\Dwg\3.22.dwg Layout Name: 3.22

XREF LIST
Ltscale: 1
Resolved
ttlblk

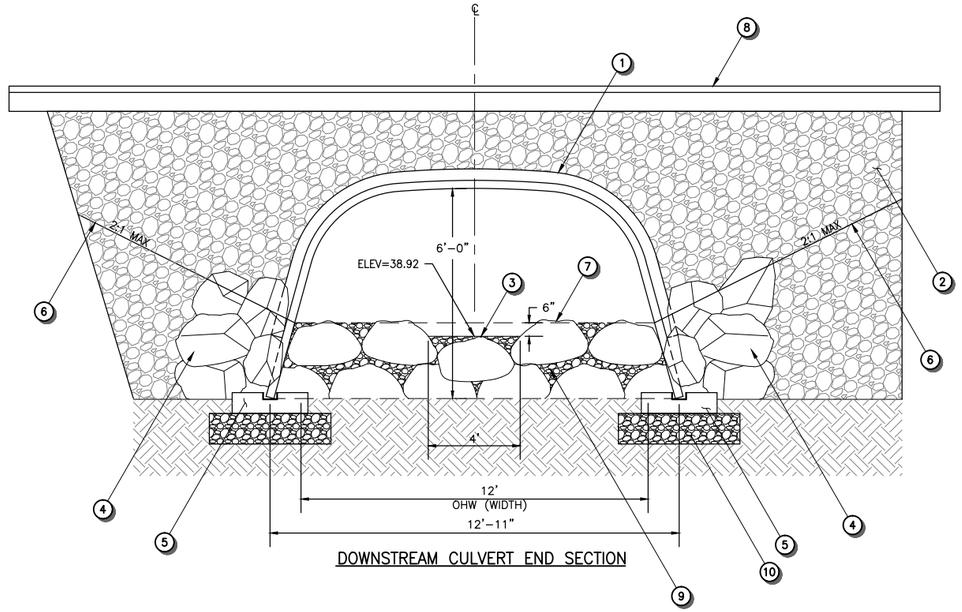

DOWNSTREAM CULVERT END SECTION

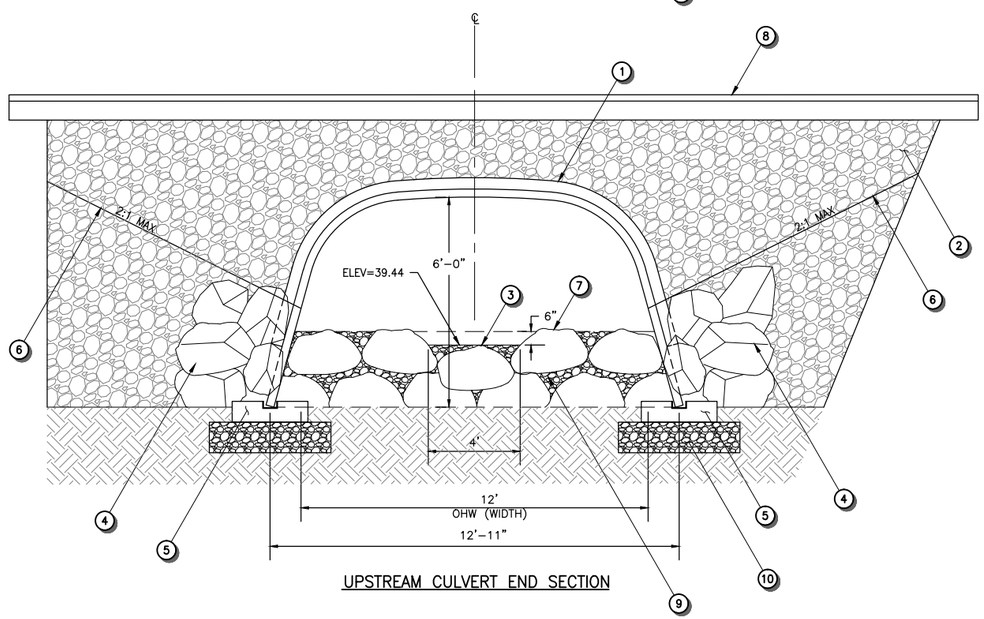

UPSTREAM CULVERT END SECTION

CULVERT (WILLOWS CREEK)

NOT TO SCALE

CULVERT CONSTRUCTION NOTES

1. INSTALL ALUMINUM BOX CULVERT, SIZE AS SHOWN, WITH 0.15" CROWN THICKNESS AND 0.15" HAUNCH THICKNESS. ALUMINUM BOX CULVERT MATERIAL TO BE ASTM B 864 AND AASHTO M219.
2. BACKFILL WITH SUITABLE NATIVE MATERIAL, UNLESS OTHERWISE DIRECTED BY THE ENGINEER.
3. STREAMBED GRAVEL INVERT ELEVATION PER PLAN AT CENTER OF CULVERT. CREATE A 6"D X 4'W LOW FLOW CHANNEL DOWN CENTER OF CULVERT.
4. INSTALL STREAMBED BOULDER FOR SLOPE PROTECTION AT CULVERT ENDS.
5. INSTALL CONCRETE FOOTING. SEE DETAIL ON DWG 3.24.
6. RESTORE STREAM BANK GRADE, TRANSITION TO AND MATCH EXISTING BANK SLOPE.
7. INSTALL STREAMBED BOULDERS TO INVERT ELEVATION. CREATE A LOW FLOW NOTCH BY INSTALLING ROCK AT CENTERLINE APPROX. 6" LOWER.
8. TRAIL FINISHED GRADE.
9. STREAMBED GRAVEL INFILL.
10. PLACE QUARRY SPALLS WRAPPED IN GEOTEXTILE FOR SEPARATION PER SHEET 3.24

NOTES:

1. CONSTRUCTION LOADS THAT EXCEED HS-20 LIMITS ARE NOT ALLOWED ON THE STRUCTURE UNTIL THE STRUCTURE HAS BEEN BACKFILLED AND PAVED, AND WITHOUT APPROVAL FROM THE ENGINEER.

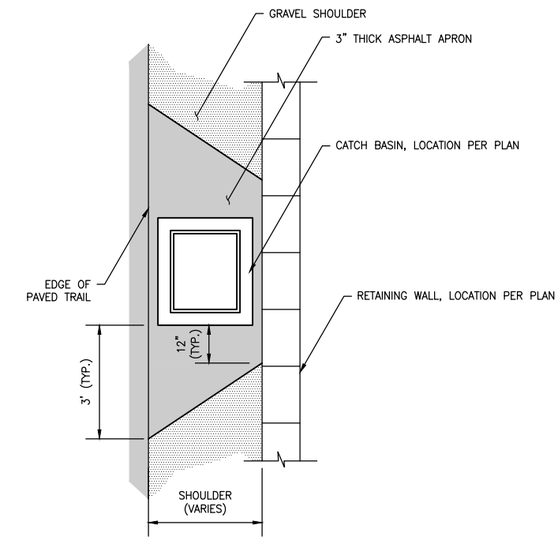

CATCH BASIN APRON

NOT TO SCALE

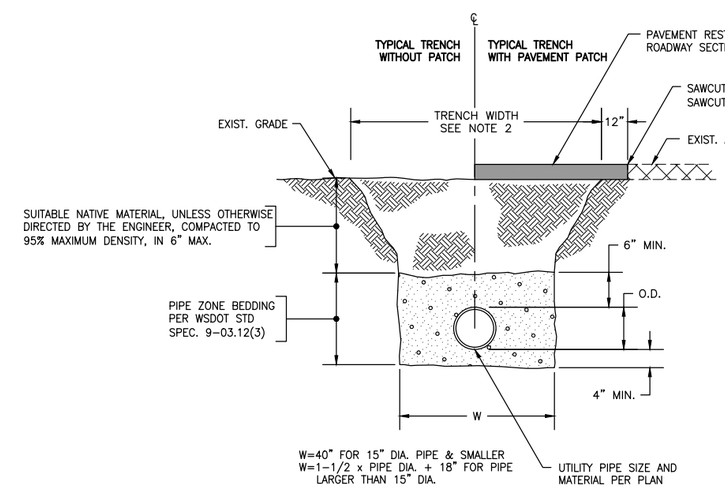

NOTES:

1. ALL DENSITIES SHALL BE AS DETERMINED BY MODIFIED PROCTOR (ASTM D1557)
2. TRENCH WIDTH IN PAVED ROADWAYS ARE NOT TO EXCEED 6'-0". IF CONDITIONS REQUIRE A WIDER TRENCH, A SPECIAL DESIGN MUST BE SUMBITTED AND APPROVED BY THE CITY.

TYPICAL TRENCH DETAIL

NOT TO SCALE

CALL BEFORE YOU DIG 1-800-424-5555

City of Redmond
WASHINGTON

CITY OF REDMOND
PUBLIC WORKS DEPARTMENT
15670 NE 85TH STREET - REDMOND, WA 98073-9710

Redmond Central Connector
Phase II
City Project No. 20021314
Federal Aid No. CM-1065(011)

otak
Hammi Global Partner
11241 Willows Road NE
Suite 200
Redmond, Washington 98052
Phone: (425) 822-4446
FAX: (425) 827-9577
www.otak.com

DESIGN ENGR.	DRAWN	CHECKED
TP/SW	AK/EW	NV/DS

NO.	REVISION COMMENTS	BY	REVIEW	DATE

NICO M. VANDERGRAAFF
STATE OF WASHINGTON
30792
REGISTERED PROFESSIONAL ENGINEER
1/14/16

TRAIL AND DRAINAGE DETAILS

January 2016

PROJECT NO. OTAK 32246
SHEET: 36 OF: 111
DRAWING NO. 3.23

Plotted: Jan 14, 2016 - 9:38am touta K:\project\32200\32246\Dwg\3.23.dwg Layout Name: 3.23

XREF LIST
Ltscale: 1
Resolved
TTLBLK

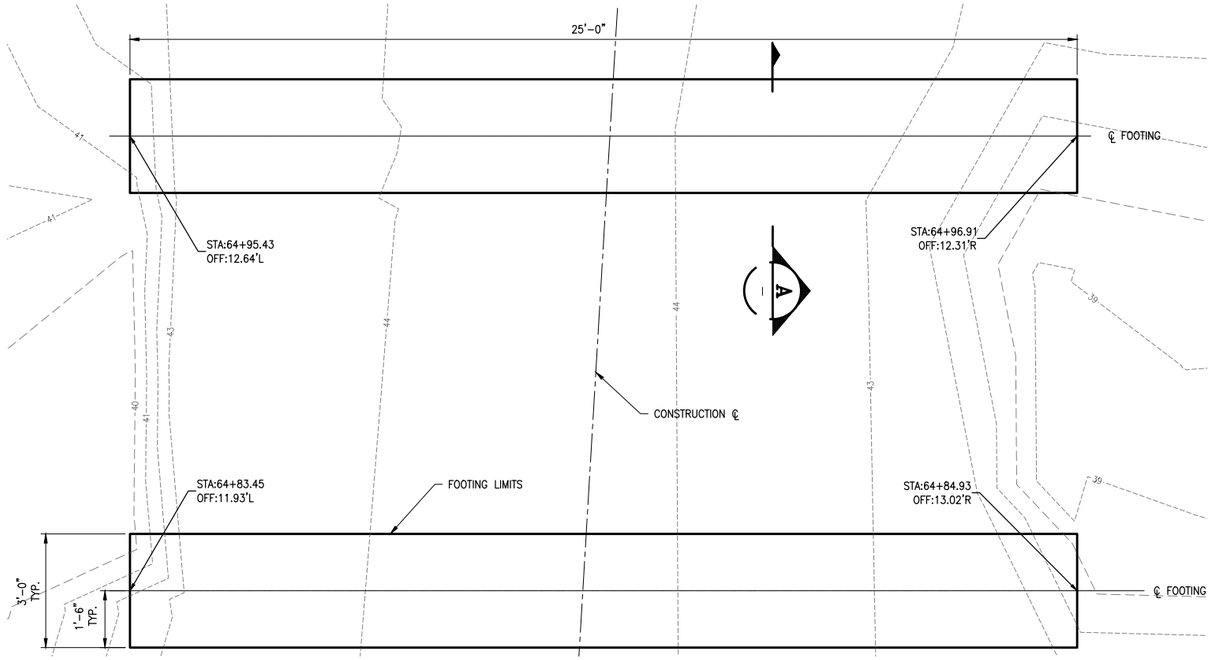

FOOTING PLAN

SCALE: 1/2" = 1'-0" FOR 22" x 34" SHEET SIZE

NOTES:
1. 4000 PSI CONCRETE.
2. ASTM A615 GRADE 60 REINFORCING.
3. SIDES TO BE CAST AGAINST TIMBER FORMS AND THEN BACKFILLED.

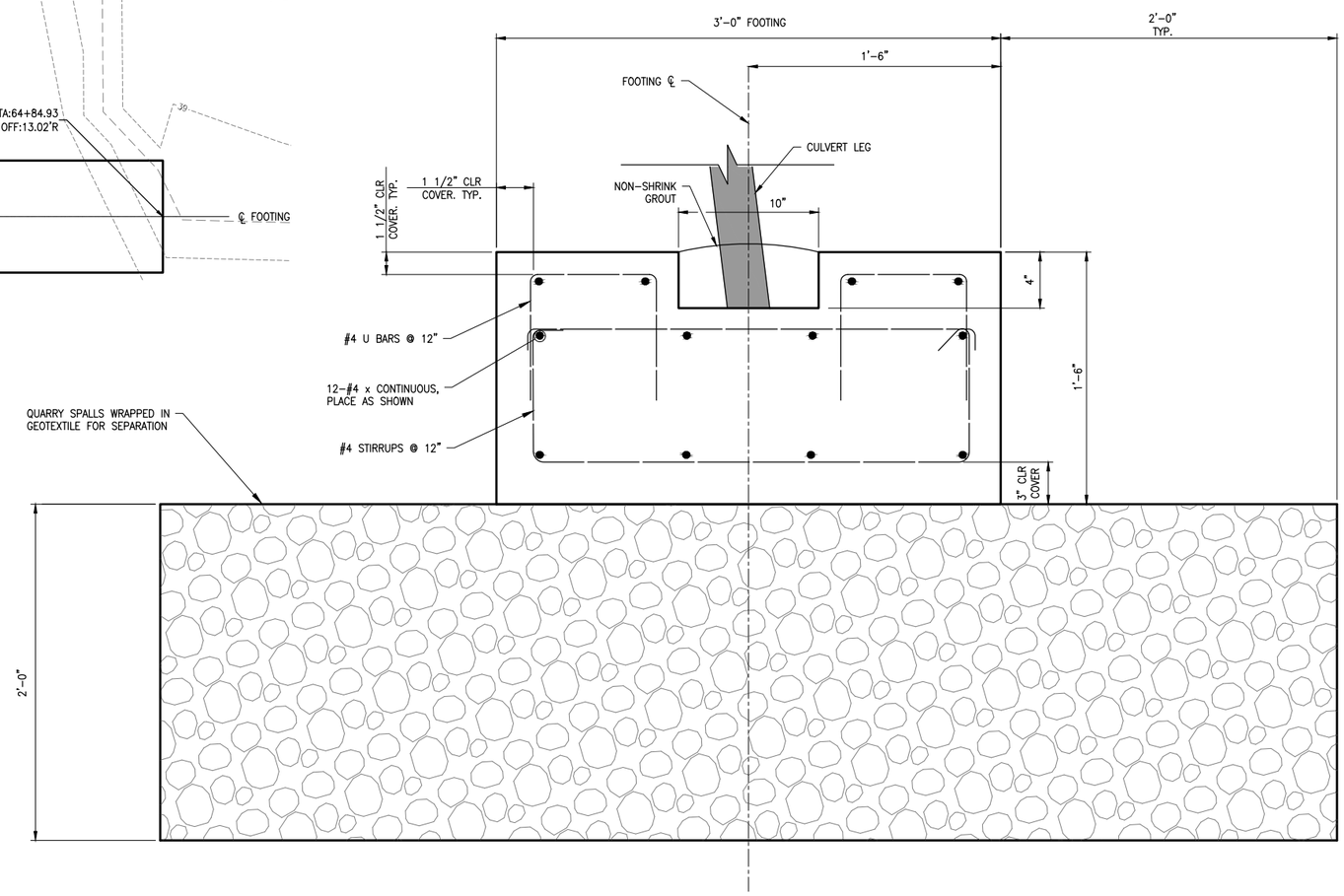

SECTION A - FOOTING CROSS SECTION

NO SCALE

CALL BEFORE YOU DIG 1-800-424-5555

CityofRedmond WASHINGTON

CITY OF REDMOND
PUBLIC WORKS DEPARTMENT
15670 NE 85TH STREET - REDMOND, WA 98073-9710

Redmond Central Connector
Phase II
City Project No. 20021314
Federal Aid No. CM-1065(011)

otak
HanmiGlobal Partner
11241 Willows Road NE
Suite 200
Redmond, Washington 98052
Phone: (425) 822-4446
FAX: (425) 827-9577
www.otak.com

DESIGN ENGR.	DRAWN	CHECKED
TP/SW	AK/EW	NV/DS

NO.	REVISION COMMENTS	BY	REVIEW	DATE

STEPHEN J. WINSOR
STATE OF WASHINGTON
45633
PROFESSIONAL ENGINEER
1/14/16

TRAIL AND DRAINAGE DETAILS

January 2016

PROJECT NO. OTAK 32246
SHEET: 37 OF: 111
DRAWING NO. 3.24

Plotted: Jan 14, 2016 - 2:13pm toula K:\project\32200\32246\Dwg\3.24.dwg Layout Name: 3.24

XREF LIST
Ltscale: 1
Resolved
ttlblk

SHEETS 38 - 39
NOT USED

CALL BEFORE YOU DIG 1-800-424-5555

CityofRedmond
WASHINGTON

CITY OF REDMOND
PUBLIC WORKS DEPARTMENT
15670 NE 85TH STREET - REDMOND, WA 98073-9710

Redmond Central Connector
Phase II
City Project No. 20021314
Federal Aid No. CM-1065(011)

otak
HanmiGlobal Partner

11241 Willows Road NE
Suite 200
Redmond, Washington 98052
Phone: (425) 822-4446
FAX: (425) 827-9577
www.otak.com

DESIGN ENGR.	DRAWN	CHECKED
TP/SW	AK/EW	NV/DS

NO.	REVISION COMMENTS	BY	REVIEW	DATE

TRAIL AND DRAINAGE DETAILS

January 2016

PROJECT NO.
OTAK 32246

SHEET: - OF: 111

DRAWING NO.
-

Plotted: Jan 14, 2016 - 9:39am touta K:\project\32200\32246\Dwg\3-25-3-26.dwg Layout Name: 3-25

XREF LIST
Ltscale: 1
Resolved
TTLBLK
S246Y220
C246R500
T246X900
T246X800
S246B190
RCC IL_BASE_TBP

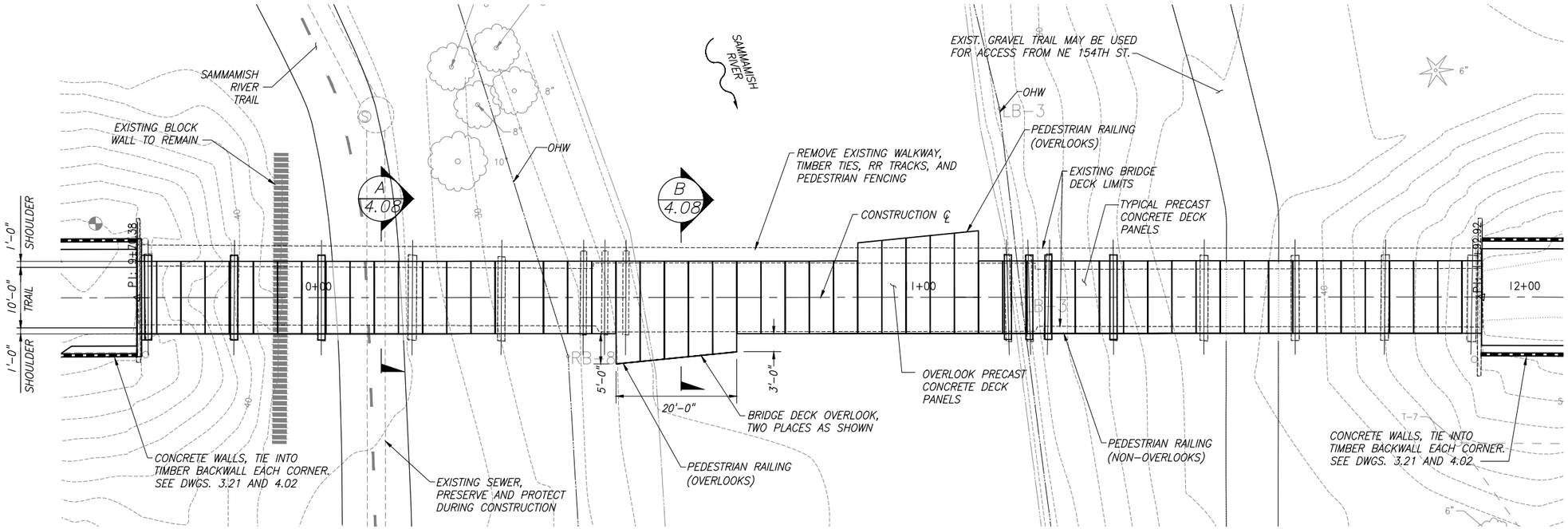

PLAN

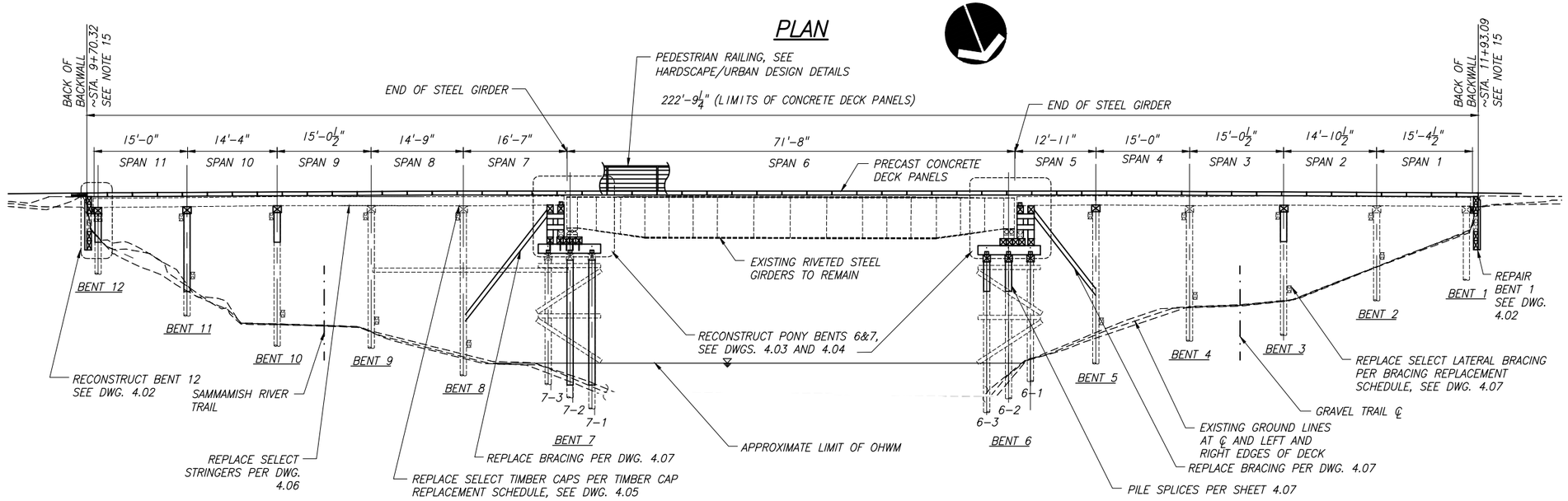

ELEVATION

GENERAL NOTES

1. PERFORM WORK ACCORDING TO THE WSDOT STANDARD SPECIFICATIONS FOR ROAD, BRIDGE, AND MUNICIPAL CONSTRUCTION 2014.
2. BRIDGE RETROFIT DESIGNED ACCORDING TO THE AASHTO LRFD GUIDE SPECIFICATIONS FOR PEDESTRIAN BRIDGE DESIGN.
3. DESIGN LIVE LOADS:
   - 90 PSF UNIFORM LOAD
   - AASHTO H10

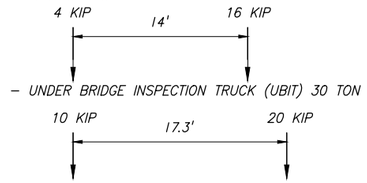

   - UNDER BRIDGE INSPECTION TRUCK (UBIT) 30 TON

4. ALL TIMBER SHALL BE DOUGLAS FIR NO. 1 OR BETTER AND TREATED IN ACCORDANCE WITH THE SPECIFICATIONS.
5. TIMBER DIMENSIONS SHOWN ARE WIDTH X HEIGHT X LENGTH AND ARE NOMINAL DIMENSIONS. TIMBER MAY ROUGH SAWN UNLESS NOTED OTHERWISE.
6. CONCRETE FOR PRECAST DECK PANELS SHALL BE CLASS 4000.
7. REINFORCING STEEL SHALL CONFORM TO ASTM A615 GRADE 60 EXCEPT WELDED, FIELD BENT, OR FIELD CUT STEEL SHALL BE ASTM A706 GRADE 60.
8. STRUCTURAL STEEL SHAPES, PLATES, AND BARS SHALL CONFORM TO ASTM A36.
9. FASTENERS SHALL BE PER PLAN SHEETS AND SPECIFICATIONS.
10. ALL METAL COMPONENTS EXCEPT REINFORCING STEEL SHALL BE HOT-DIP GALVANIZED AFTER FABRICATION IN ACCORDANCE WITH ASTM A123 OR ASTM A153 AS APPLICABLE.
11. THE CONTRACTOR IS RESPONSIBLE FOR THE STABILITY OF THE STRUCTURE DURING OF CONSTRUCTION. SEE SPECIFICATIONS FOR SUBMITTAL AND APPROVAL REQUIREMENTS.
12. PROVIDE CONTAINMENT AND/OR CATCHMENT IN ORDER TO PREVENT CONSTRUCTION DEBRIS FROM FALLING WITHIN THE ORDINARY HIGH WATER LIMITS OR THE WETTED PERIMETER, WHICHEVER IS LARGER.
13. EXISTING BRIDGE DIMENSIONS AND ELEVATIONS SHALL BE VERIFIED IN THE FIELD BY THE CONTRACTOR PRIOR TO ORDERING MATERIAL. NOTIFY ENGINEER IF CONFLICT OR DISCREPANCY EXISTS.
14. REFER TO DRAWING 3.02 FOR FINISH GRADE DECK GEOMETRY.
15. BACK OF BACKWALL STATION SHOWN IS APPROXIMATE AND SHALL BE FIELD VERIFIED PRIOR TO FABRICATING THE TWO PANELS AT THE ENDS OF THE BRIDGE. SEE ALSO SHEET 4.09.

DATUM
NAVD88

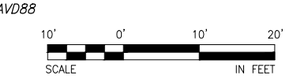

CALL BEFORE YOU DIG 1-800-424-5555

City of Redmond WASHINGTON

CITY OF REDMOND
PUBLIC WORKS DEPARTMENT
15670 NE 85TH STREET - REDMOND, WA 98073-9710
Redmond Central Connector
Phase II
City Project No. 20021314
Federal Aid No. CM-1065(011)

otak
HammKlobel Partner
11241 Willows Road NE
Suite 200
Redmond, Washington 98052
Phone: (425) 822-4446
FAX: (425) 827-9577
www.otak.com

DESIGN ENGR.	DRAWN	CHECKED
TP/SW	AK/EW	NV/DS

NO.	REVISION COMMENTS	BY	REVIEW	DATE

STEPHEN J. WILSON
STATE OF WASHINGTON
45633
PROFESSIONAL ENGINEER
1/14/16

BRIDGE LAYOUT
SAMMAMISH RIVER TRESTLE

January 2016

PROJECT NO.
OTAK 32246

SHEET: 40 OF: 111

DRAWING NO.
4.01

XREF LIST
Ltscale: 1
Resolved
TTLBLK
S246Y220
C246R500
T246X900
T246X800
S246B190
RCC II_BASE_TBP

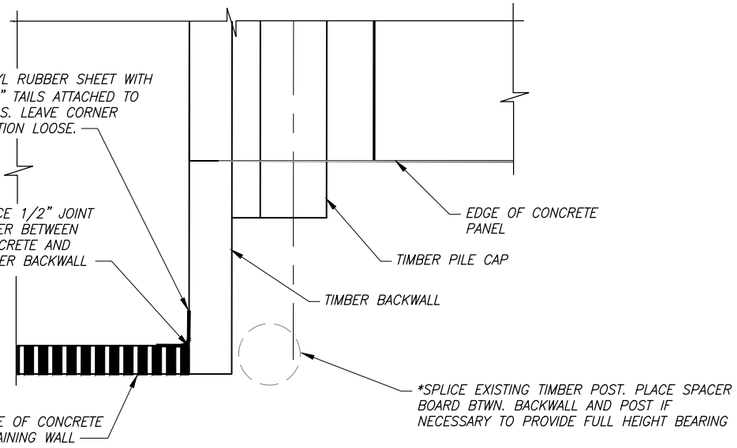

PLAN – ABUTMENT CORNER

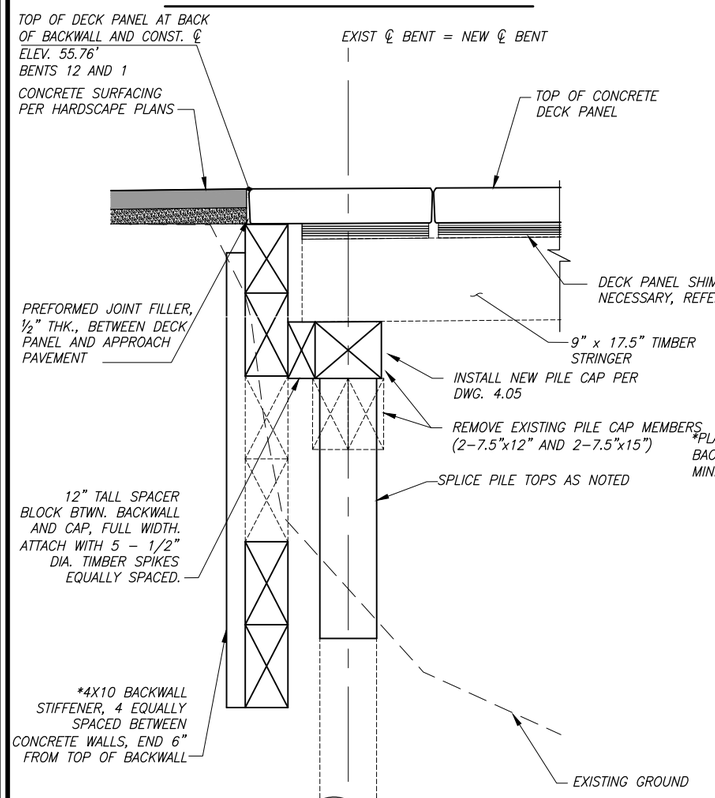

SECTION A 4.02

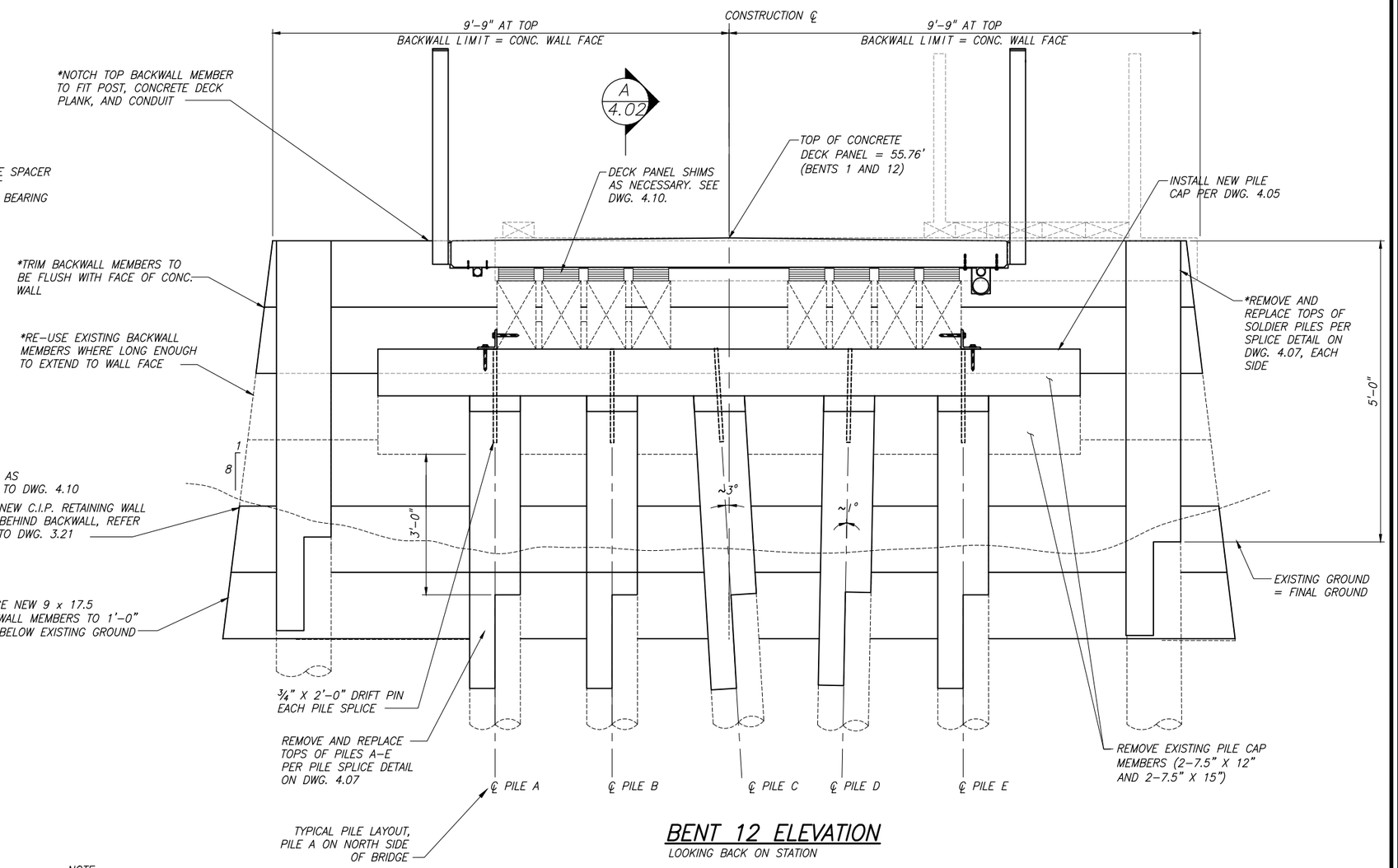

BENT 12 ELEVATION

LOOKING BACK ON STATION

NOTE:
NOTES BEGINNING WITH " * " INDICATE THAT THE WORK APPLIES TO BOTH BENTS 1 AND 12. WORK ONLY APPLIES TO BENT 12 OTHERWISE.

CALL BEFORE YOU DIG 1-800-424-5555

CityofRedmond WASHINGTON

CITY OF REDMOND
PUBLIC WORKS DEPARTMENT
15670 NE 85TH STREET – REDMOND, WA 98073-9710

Redmond Central Connector
Phase II
City Project No. 20021314
Federal Aid No. CM-1065(011)

otak
HammlGlobal Partner
11241 Willows Road NE
Suite 200
Redmond, Washington 98052
Phone: (425) 822-4446
FAX: (425) 827-9577
www.otak.com

DESIGN ENGR.	DRAWN	CHECKED
TP/SW	AK/EW	NV/DS

NO.	REVISION COMMENTS	BY	REVIEW	DATE

STEPHEN J. WILSON, STATE OF WASHINGTON, 45633, PROFESSIONAL ENGINEER, 1/14/16

BENT 12 REPAIR
SAMMAMISH RIVER TRESTLE

January 2016

PROJECT NO. OTAK 32246
SHEET: 41 OF: 111
DRAWING NO. 4.02

Plotted: Jan 14, 2016 – 9:39am touto K:\project\32200\32246\Dwg\4.01-4.09.dwg Layout Name: 4.02

XREF LIST
Ltscale: 1
Resolved
TTLBLK
S246Y220
C246R500
T246X900
T246X800
S246B190
RCC II_BASE_TBP

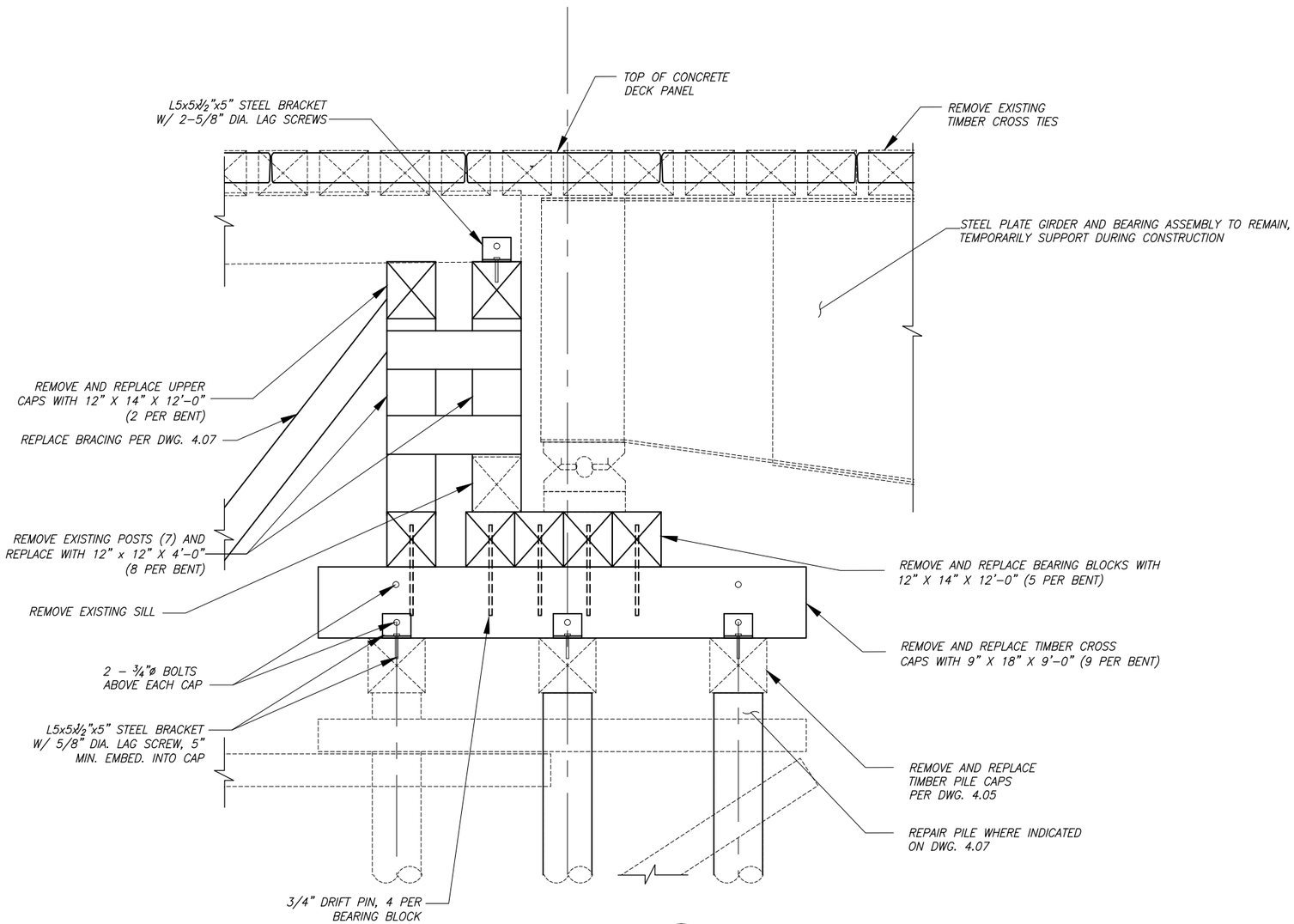

TYPICAL SECTION A/–

PONY BENTS 6 & 7
SCALE: 3/4"=1'-0"

CALL BEFORE YOU DIG 1-800-424-5555

City of Redmond
WASHINGTON

CITY OF REDMOND
PUBLIC WORKS DEPARTMENT
15670 NE 85TH STREET - REDMOND, WA 98073-9710

Redmond Central Connector
Phase II
City Project No. 20021314
Federal Aid No. CM-1065(011)

otak
Hamm/Global Partner

11241 Willows Road NE
Suite 200
Redmond, Washington 98052
Phone: (425) 822-4446
FAX: (425) 827-9577
www.otak.com

DESIGN ENGR.	DRAWN	CHECKED
TP/SW	AK/EW	NV/DS

NO.	REVISION COMMENTS	BY	REVIEW	DATE

STEPHEN J. WILSON
STATE OF WASHINGTON
45633
PROFESSIONAL ENGINEER
1/14/16

PONY BENTS 6 AND 7 REPAIR SAMMAMISH RIVER TRESTLE

January 2016

PROJECT NO. OTAK 32246
SHEET: 42 OF: 111
DRAWING NO. 4.03

Plotted: Jan 14, 2016 - 9:40am toula K:\project\32200\32246\Dwg\4.01-4.09.dwg Layout Name: 4.03

XREF LIST
Ltscale: 1
Resolved
TTLBLK
S246Y220
C246R500
T246X900
T246X800
S246B190
RCC II_BASE_TBP

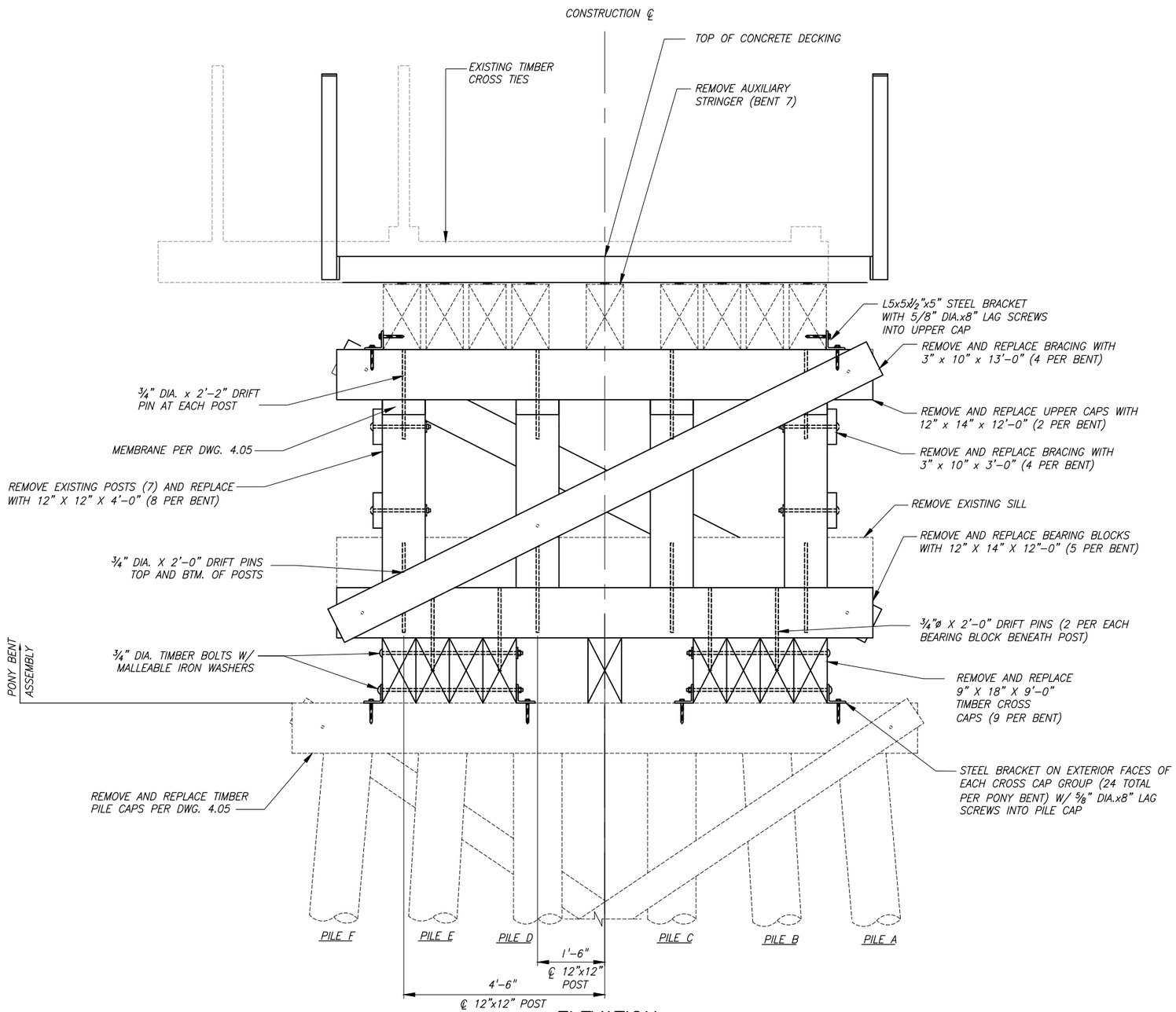

ELEVATION

PONY BENTS 6 & 7
LOOKING UPSTATION

CALL BEFORE YOU DIG 1-800-424-5555

CityofRedmond
WASHINGTON

CITY OF REDMOND
PUBLIC WORKS DEPARTMENT
15670 NE 85TH STREET - REDMOND, WA 98073-9710

Redmond Central Connector
Phase II
City Project No. 20021314
Federal Aid No. CM-1065(011)

otak
HanmiGlobal Partner

11241 Willows Road NE
Suite 200
Redmond, Washington 98052
Phone: (425) 822-4446
FAX: (425) 827-9577
www.otak.com

DESIGN ENGR.	DRAWN	CHECKED
TP/SW	AK/EW	NV/DS

NO.	REVISION COMMENTS	BY	REVIEW	DATE

STEPHEN J. WIASON
STATE OF WASHINGTON
45633
PROFESSIONAL ENGINEER
1/14/16

PONY BENTS 6 AND 7 REPAIR
SAMMAMISH RIVER TRESTLE

January 2016

PROJECT NO.
OTAK 32246

SHEET: 43 OF: 111

DRAWING NO.
4.04

Plotted: Jan 14, 2016 - 9:40am touta K:\project\32200\32246\Dwg\4.01-4.09.dwg Layout Name: 4.04

XREF LIST
Ltscale: 1
Resolved
TTLBLK
S246Y220
C246R500
T246X900
T246X800
S246B190
RCC II_BASE_TBP

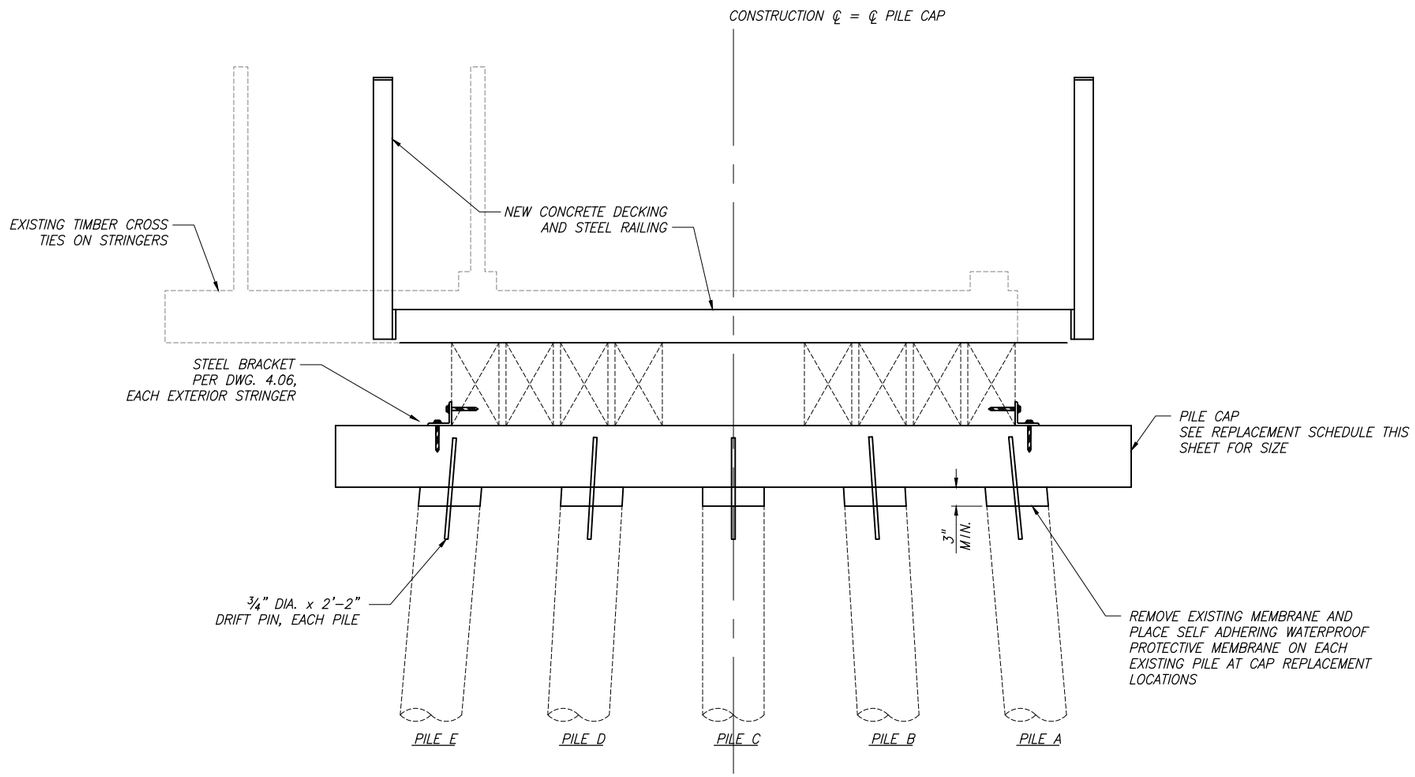

TYPICAL PILE CAP ELEVATION

LOOKING UPSTATION

PILE CAP REPLACEMENT SCHEDULE

BENT	PILE CAP DIMENSIONS
3	14"x14"x14'-0"
5	14"x14"x14'-0"
6-1	14"x14"x14'-0"
6-2	14"x14"x14'-0"
6-3	14"x14"x14'-0"
7-3	14"x14"x14'-0"
10	14"x14"x14'-0"
11	14"x14"x14'-0"
12	14"x14"x14'-0"

CALL BEFORE YOU DIG 1-800-424-5555

City of Redmond WASHINGTON

CITY OF REDMOND
PUBLIC WORKS DEPARTMENT
15670 NE 85TH STREET - REDMOND, WA 98073-9710

Redmond Central Connector
Phase II
City Project No. 20021314
Federal Aid No. CM-1065(011)

otak
Hamm/Global Partner
11241 Willows Road NE
Suite 200
Redmond, Washington 98052
Phone: (425) 822-4446
FAX: (425) 827-9577
www.otak.com

DESIGN ENGR.	DRAWN	CHECKED
TP/SW	AK/EW	NV/DS

NO.	REVISION COMMENTS	BY	REVIEW	DATE

STEPHEN J. WINSOR
STATE OF WASHINGTON
45633
PROFESSIONAL ENGINEER
1/14/16

PILE CAP REPLACEMENT DETAILS SAMMAMISH RIVER TRESTLE

January 2016

PROJECT NO. OTAK 32246
SHEET: 44 OF: 111
DRAWING NO. 4.05

Plotted: Jan 14, 2016 - 9:40am touta K:\project\32200\32246\Dwg\4.01-4.09.dwg Layout Name: 4.05

XREF LIST
Ltscale: 1
Resolved
TTLBLK
S246Y220
C246R500
T246X900
T246X800
S246B190
RCC II_BASE_TBP

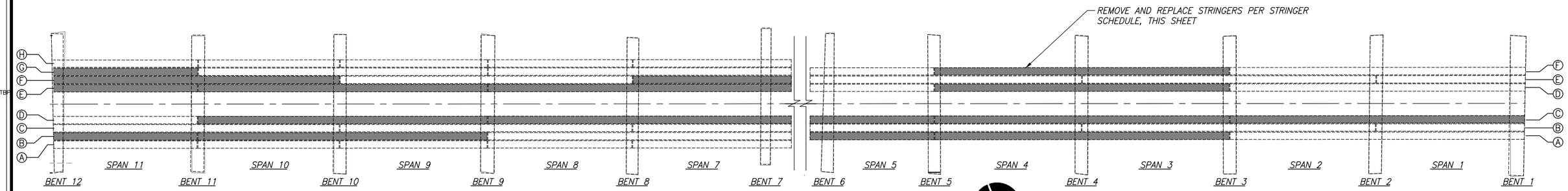

STRINGER LAYOUT

– STRINGERS SHADED GRAY DENOTE REPLACEMENT. (SCHEDULE, THIS SHEET, TAKES PRECEDENCE)

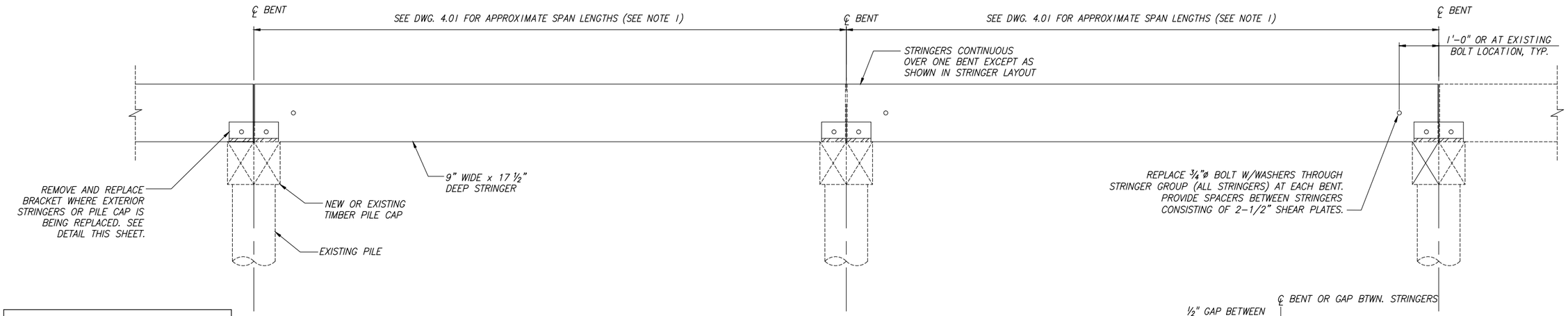

TYPICAL STRINGER REPLACEMENT ELEVATION

STRINGER REPLACEMENT SCHEDULE

SPAN(S)	STRINGER ID
11	B
11	E
11	G
10–11	F
9–10	B
9–10	D
9–10	E
7–8	D
7–8	E
7	F
5	C
5	A
3–4	A
3–4	C
3–4	D
3–4	F
1–2	C

STRINGER REPLACEMENT NOTES:

1. FIELD VERIFY EXISTING STRINGER LENGTH PRIOR TO ORDERING NEW STRINGER. NO FIELD CUTTING SHALL BE PERMITTED.

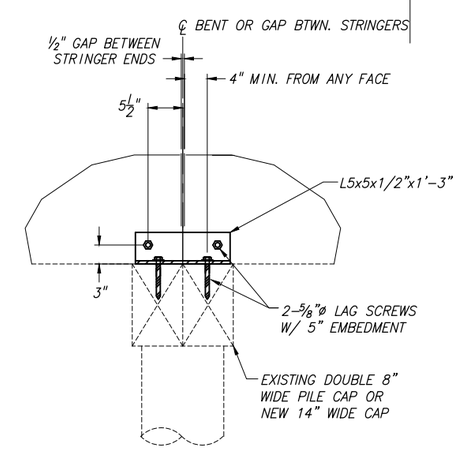

BRACKET DETAIL

AT EXTERIOR STRINGER

CALL BEFORE YOU DIG 1-800-424-5555

City of Redmond
WASHINGTON

CITY OF REDMOND
PUBLIC WORKS DEPARTMENT
15670 NE 85TH STREET – REDMOND, WA 98073-9710

Redmond Central Connector
Phase II
City Project No. 20021314
Federal Aid No. CM-1065(011)

otak
Hammi/Global Partner
11241 Willows Road NE
Suite 200
Redmond, Washington 98052
Phone: (425) 822-4446
FAX: (425) 827-9577
www.otak.com

DESIGN ENGR.	DRAWN	CHECKED
TP/SW	AK/EW	NV/DS

NO.	REVISION COMMENTS	BY	REVIEW	DATE

STEPHEN J. WILSON
STATE OF WASHINGTON
45633
PROFESSIONAL ENGINEER
1/14/16

STRINGER REPLACEMENT DETAILS SAMMAMISH RIVER TRESTLE

January 2016

PROJECT NO. OTAK 32246
SHEET: 45 OF: 111
DRAWING NO. 4.06

Plotted: Jan 14, 2016 – 9:40am touta K:\project\32200\32246\Dwg\4.01-4.09.dwg Layout Name: 4.06

XREF LIST
Ltscale: 1
Resolved
TTLBLK
S246Y220
C246R500
T246X900
T246X800
S246B190
RCC II_BASE_TBP

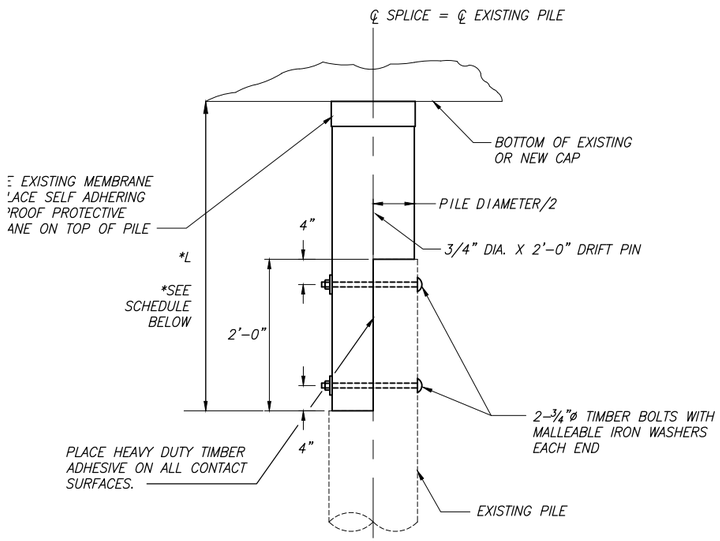

PILE SPLICE DETAIL (A / –)

PILE SPLICE SCHEDULE	
PILE ID	MIN. LENGTH (L)
BENT 1 SOLDIER PILES	PER PLAN
3-E	5'-0"
6-2E	5'-0"
6-3C	5'-0"
6-3D	5'-0"
6-3E	5'-0"
7-1A	22'-0"
7-2D	22'-0"
10-D	5'-0"
11-A	13'-0"
11-B	5'-0"
11-C	5'-0"
11-D	5'-0"
12-A	PER PLAN
12-B	PER PLAN
12-C	PER PLAN
12-D	PER PLAN
12-E	PER PLAN
BENT 12 SOLDIER PILES	PER PLAN

PILE SPLICE NOTES:

1. CONTRACTOR TO FIELD MEASURE EXISTING PILE DIAMETERS. NEW PILE SPLICE DIAMETER SHALL BE WITHIN 1" OF EXISTING.
2. HEAVY DUTY TIMBER ADHESIVE SHALL BE A WATERBORNE ADHESIVE AND SHALL BE A STRUCTURAL ADHESIVE SYSTEM. SUBMIT PRODUCT INFORMATION FOR REVIEW AND APPROVAL.
3. LENGTHS SHOWN IN PILE SPLICE SCHEDULE ARE MINIMUM VALUES. CONTRACTOR TO FIELD VERIFY LENGTHS NECESSARY TO INSTALL SPLICE TO AVOID BRACING MEMBERS.
4. CONTRACTOR SHALL ORDER PILE LENGTHS LONGER THAN MINIMUM NECESSARY AND FIELD CUT TO FIT IN ORDER TO ACCOUNT FOR POTENTIAL PILE DECAY BEYOND THE ANTICIPATED LIMITS.

LATERAL BRACING NOTES:

1. *LENGTHS ARE ESTIMATED, CONTRACTOR SHALL FIELD VERIFY PRIOR TO ORDERING.
2. (W) – WEST FACE OF BENT.
   (E) – EAST OF FACE OF BENT.
3. INSTALL NEW 3/4"ø TIMER BOLT AT BRACING END. INSTALL 1/2"ø TIMBER SPIKE OR TIMBER BOLT TO EACH POST THAT THE BRACING CROSSES WITH TIMBER BLOCKING AS NECESSARY.

LATERAL BRACING REPAIR SCHEDULE			
BENT	TYPE	*LENGTH (FT)	SIZE
10	HORIZONTAL (E)	14.5	3 x 9.5
9	HORIZONTAL (E)	14.5	3 x 9.5
9	UPPER DIAGAONAL (E)	17.0	3 x 9.5
8	LOWER HORIZONTAL (E)	18.5	3 x 9.5
8	LOWER HORIZONTAL (W)	18.5	3 x 9.5
8	UPPER HORIZONTAL(E)	15.0	3 x 9.5
8	LOWER DIAGONAL (E)	18.5	3 x 9.5
8	LOWER DIAGONAL (W)	18.5	3 x 9.5
8	UPPER DIAGONAL (E)	17.5	3 x 9.5
8-7	LONGIT. DIAGONAL	25.0	4 x 8
8-7	LONGIT. DIAGONAL	25.0	4 x 8
7	HORIZONTAL	16.0	4 x 10
7	UPPER DIAGONAL	18.0	4 x 8
7	LOWER DIAGONAL	18.0	4 x 8
6	LOWER DIAGONAL	18.0	4 x 8
6-5	LONGIT. DIAGONAL	20.0	4 x 8
6-5	LONGIT. DIAGONAL	20.0	4 x 8
3	DIAGONAL	18.0	3 x 9.5

CALL BEFORE YOU DIG 1-800-424-5555

City of Redmond
WASHINGTON

CITY OF REDMOND
PUBLIC WORKS DEPARTMENT
15670 NE 85TH STREET – REDMOND, WA 98073-9710

Redmond Central Connector
Phase II
City Project No. 20021314
Federal Aid No. CM-1065(011)

otak
HanmiGlobal Partner
11241 Willows Road NE
Suite 200
Redmond, Washington 98052
Phone: (425) 822-4446
FAX: (425) 827-9577
www.otak.com

DESIGN ENGR.	DRAWN	CHECKED
TP/SW	AK/EW	NV/DS

NO.	REVISION COMMENTS	BY	REVIEW	DATE

STATE OF WASHINGTON
STEPHEN J. WILSON
45633
PROFESSIONAL ENGINEER
1/14/16

PILE SPLICING AND LATERAL BRACING REPAIR SAMMAMISH RIVER TRESTLE

January 2016

PROJECT NO. OTAK 32246
SHEET: 46 OF: 111
DRAWING NO. 4.07

Plotted: Jan 14, 2016 – 9:41am touta K:\project\32200\32246\Dwg\4.01-4.09.dwg Layout Name: 4.07

XREF LIST
Ltscale: 1
Resolved
TTLBLK
S246Y220
C246R500
T246X900
T246X800
S246B190
RCC II_BASE_TBP

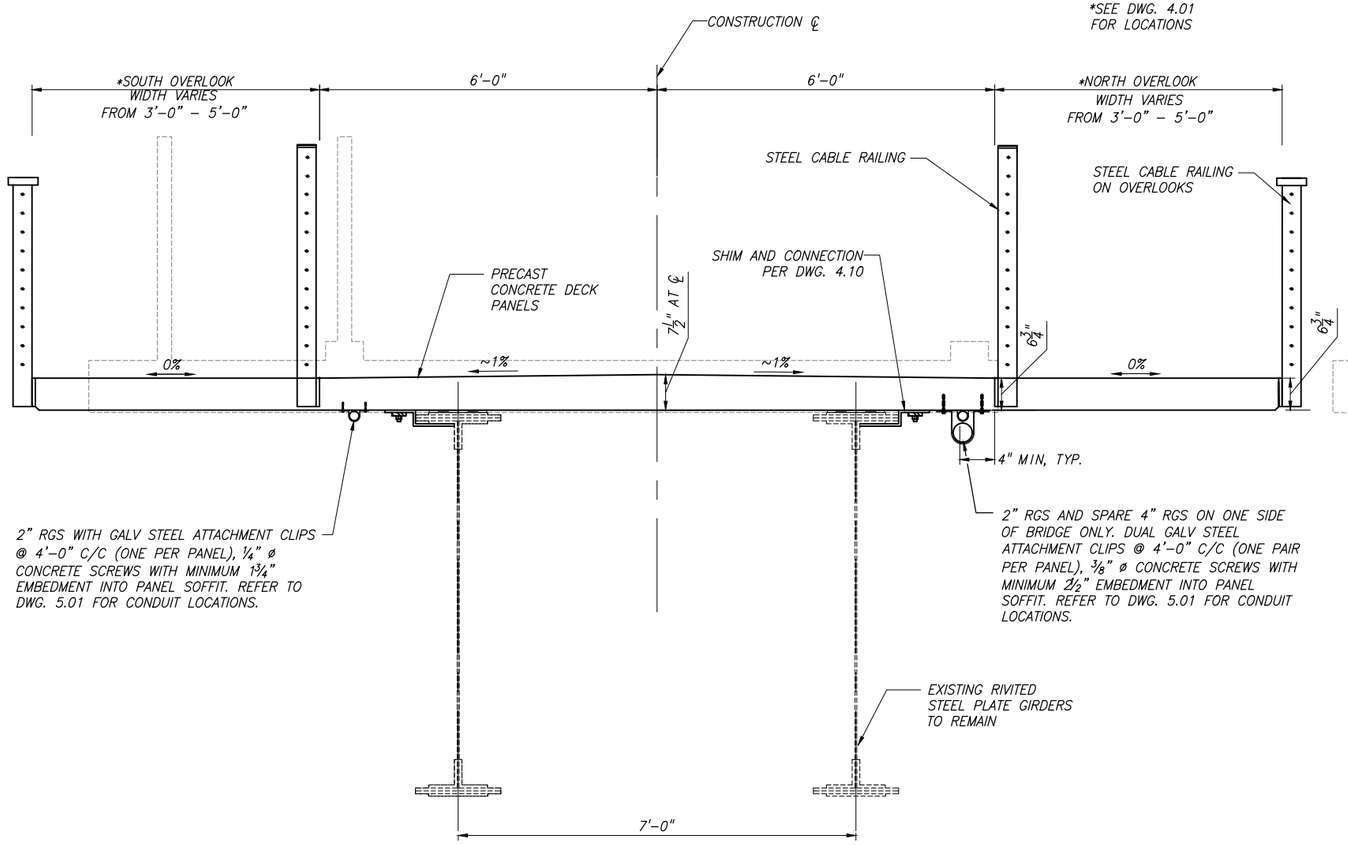

TYPICAL DECK SECTION — B / 4.01
STEEL GIRDER SPAN

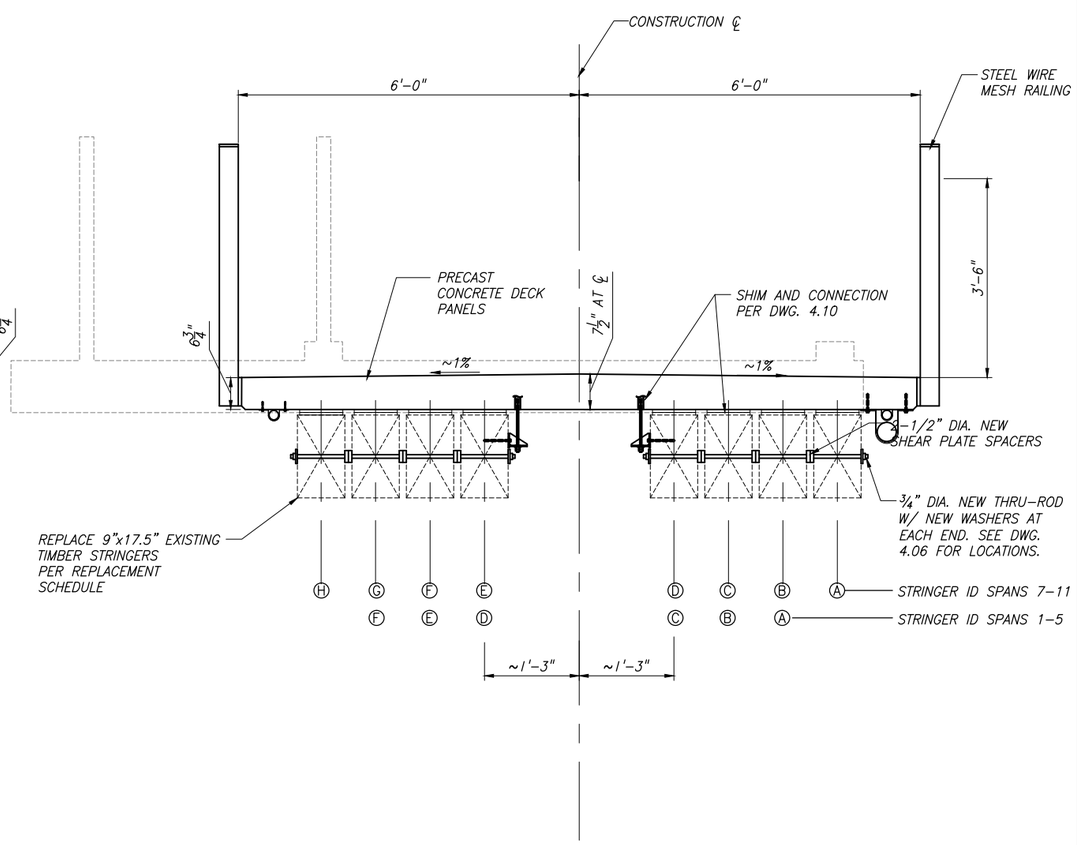

TYPICAL DECK SECTION — A / 4.01
TIMBER STRINGER SPANS
LOOKING UPSTATION

CALL BEFORE YOU DIG 1–800–424–5555

City of Redmond
WASHINGTON

CITY OF REDMOND
PUBLIC WORKS DEPARTMENT
15670 NE 85TH STREET – REDMOND, WA 98073–9710

Redmond Central Connector
Phase II
City Project No. 20021314
Federal Aid No. CM–1065(011)

otak
Hammel Global Partner
11241 Willows Road NE
Suite 200
Redmond, Washington 98052
Phone: (425) 822-4446
FAX: (425) 827-9577
www.otak.com

DESIGN ENGR.	DRAWN	CHECKED
TP/SW	AK/EW	NV/DS

NO.	REVISION COMMENTS	BY	REVIEW	DATE

STEPHEN J. WIASON
STATE OF WASHINGTON
45633
PROFESSIONAL ENGINEER
1/14/16

TYPICAL DECK SECTIONS
SAMMAMISH RIVER TRESTLE

January 2016

PROJECT NO.
OTAK 32246

SHEET: 47 OF: 111

DRAWING NO.
4.08

Plotted: Jan 14, 2016 – 9:41am touta K:\project\32200\32246\Dwg\4.01-4.09.dwg Layout Name: 4.08

XREF LIST
Ltscale: 1
Resolved
TTLBLK
S246Y220
C246R500
T246X900
T246X800
S246B190
RCC II_BASE_TBP

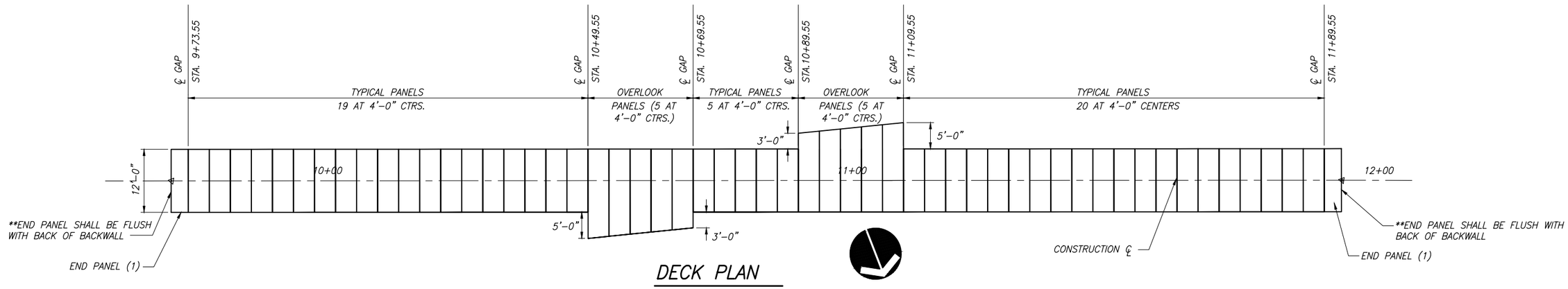

DECK PLAN

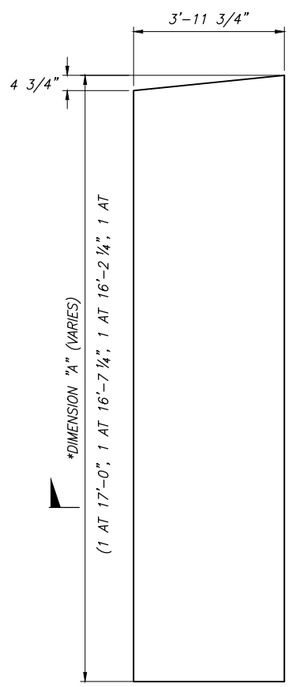

PLAN – OVERLOOK DECK PANELS

SCALE: 1/2"=1'-0"

*DIMENSION "A"

2 PANELS AT 17'-0"
2 PANELS AT 16'-7 1/4"
2 PANELS AT 16'-2 3/8"
2 PANELS AT 15'-9 5/8"
2 PANELS AT 15'-4 3/4"

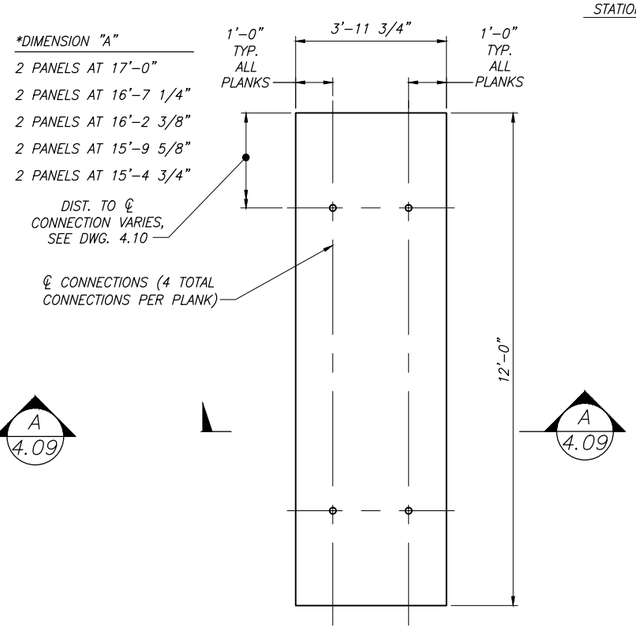

PLAN – TYPICAL DECK PANEL

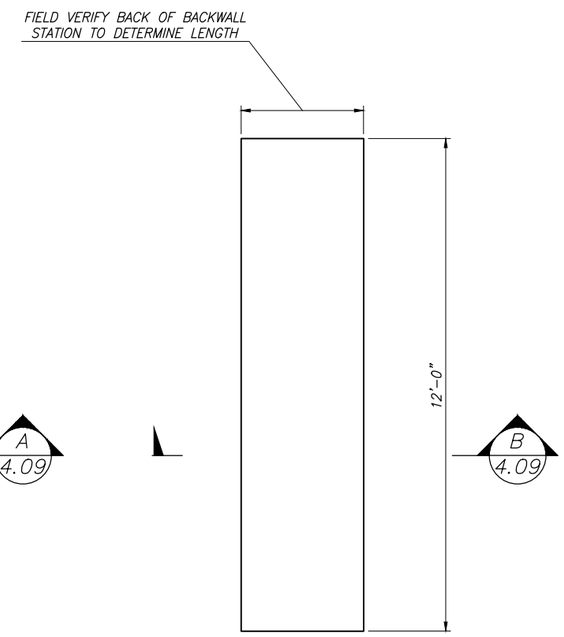

PLAN – TYPICAL END PANEL

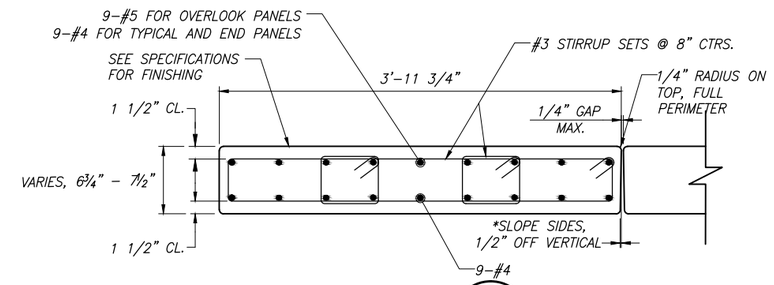

SECTION A 4.09

*EXCEPT FOR OVERLOOK PANEL WHERE INTERPRETIVE PANEL ATTACHES. SEE DWG. 4.11.

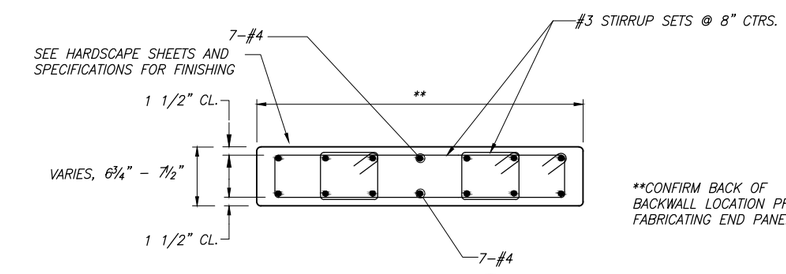

**CONFIRM BACK OF BACKWALL LOCATION PRIOR TO FABRICATING END PANELS

SECTION B 4.09

CALL BEFORE YOU DIG 1-800-424-5555

City of Redmond
WASHINGTON

CITY OF REDMOND
PUBLIC WORKS DEPARTMENT
15670 NE 85TH STREET – REDMOND, WA 98073-9710

Redmond Central Connector
Phase II
City Project No. 20021314
Federal Aid No. CM-1065(011)

otak
Hamm Global Partner
11241 Willows Road NE
Suite 200
Redmond, Washington 98052
Phone: (425) 822-4446
FAX: (425) 827-9577
www.otak.com

DESIGN ENGR.	DRAWN	CHECKED
TP/SW	AK/EW	NV/DS

NO.	REVISION COMMENTS	BY	REVIEW	DATE

STEPHEN J. WATSON
STATE OF WASHINGTON
45633
PROFESSIONAL ENGINEER
1/14/16

DECK PANEL DETAILS

January 2016

PROJECT NO.
OTAK 32246

SHEET: 48 OF: 111

DRAWING NO.
4.09

Plotted: Jan 14, 2016 – 9:41am touta K:\project\32200\32246\Dwg\4.01-4.09.dwg Layout Name: 4.09

XREF LIST
Ltscale: 1
Resolved
TTLBLK
T246X900
T246X800
S246B190

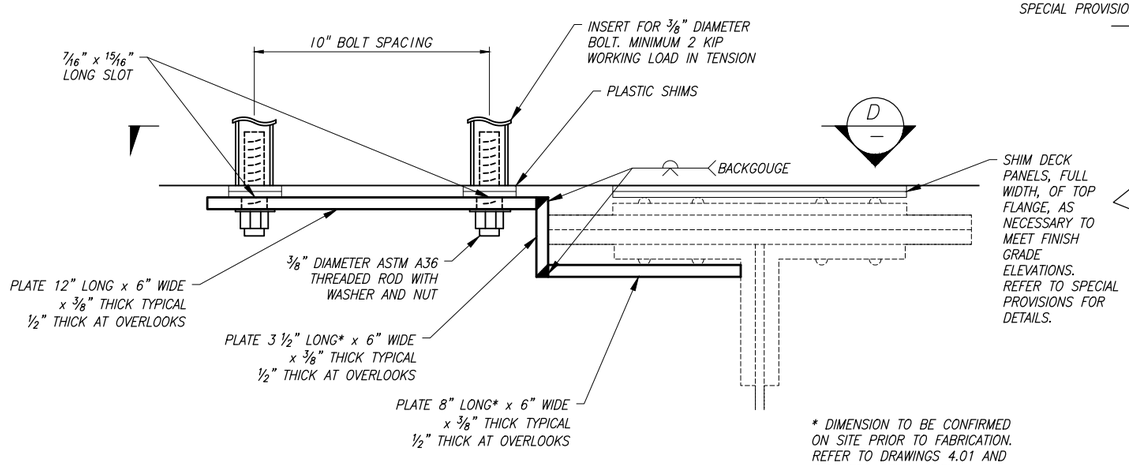

* DIMENSION TO BE CONFIRMED ON SITE PRIOR TO FABRICATION. REFER TO DRAWINGS 4.01 AND 3.02 FOR DECK LEVELS.

DETAIL C / 4.08
DECK PANEL CONNECTION TO STEEL GIRDER

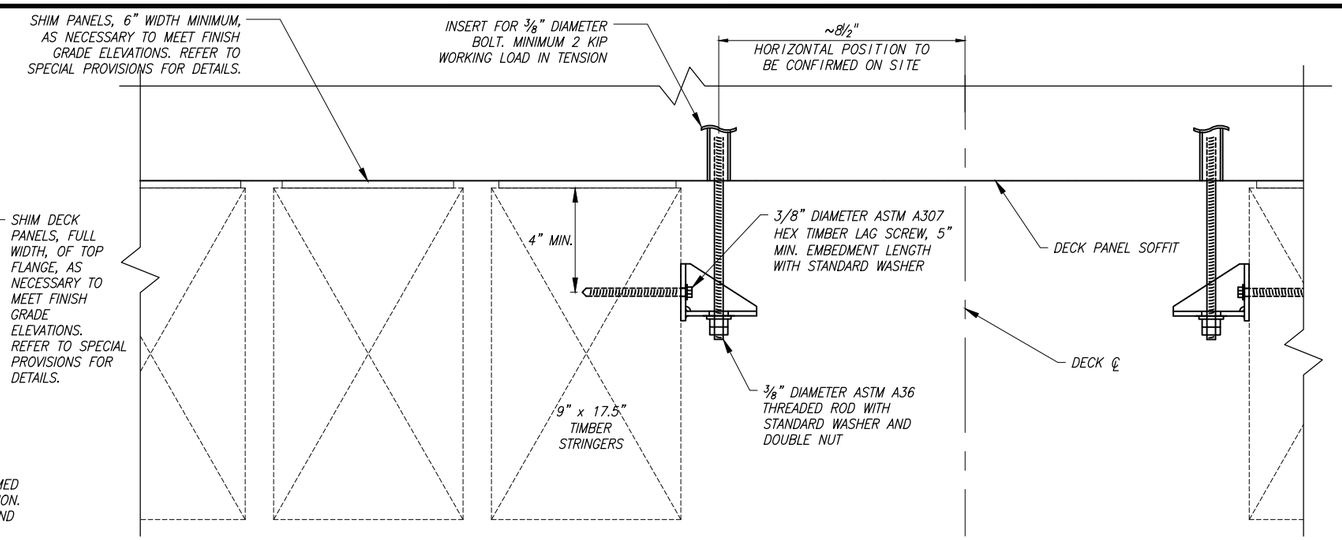

DETAIL E / 4.08
DECK PANEL TO TIMBER STRINGER CONNECTION

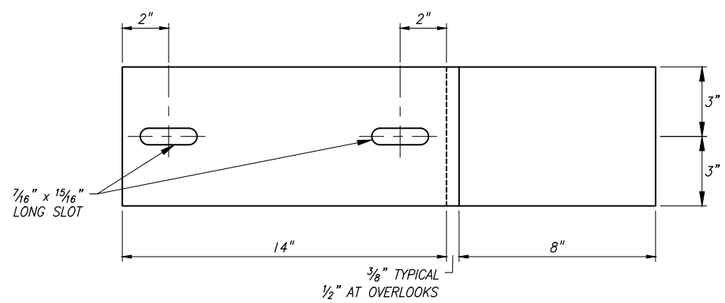

VIEW D

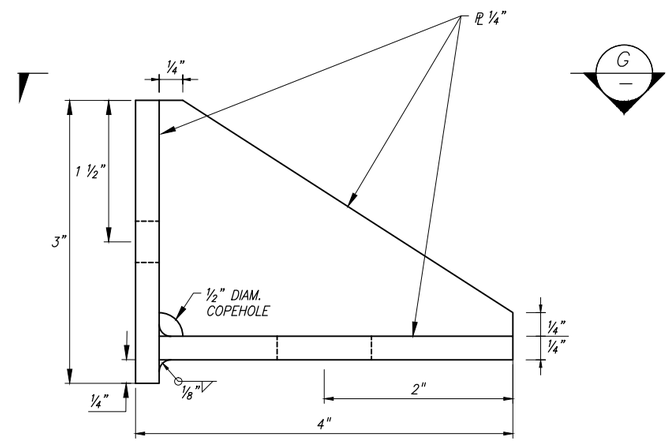

BRACKET DETAIL F

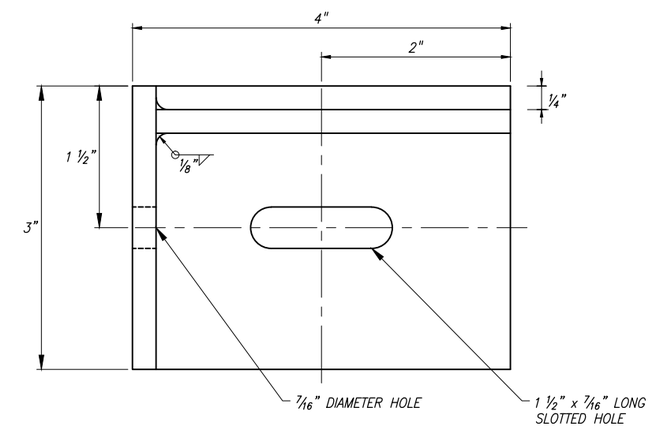

VIEW G

CALL BEFORE YOU DIG 1-800-424-5555

CityofRedmond WASHINGTON

CITY OF REDMOND
PUBLIC WORKS DEPARTMENT
15670 NE 85TH STREET - REDMOND, WA 98073-9710
Redmond Central Connector
Phase II
City Project No. 20021314
Federal Aid No. CM-1065(011)

otak
Hammi Global Partner
11241 Willows Road NE
Suite 200
Redmond, Washington 98052
Phone: (425) 822-4446
FAX: (425) 827-9577
www.otak.com

DESIGN ENGR.	DRAWN	CHECKED
TP/SW	AK/EW	NV/DS

NO.	REVISION COMMENTS	BY	REVIEW	DATE

STEPHEN J. WILSON, STATE OF WASHINGTON, 45633, PROFESSIONAL ENGINEER, 1/14/16

DECK PANEL ATTACHMENT DETAILS

January 2016

PROJECT NO. OTAK 32246
SHEET: 49 OF: 111
DRAWING NO. 4.10

Plotted: Jan 14, 2016 - 9:43am touta K:\project\32200\32246\Dwg\4.10-4.12.dwg Layout Name: 4.10

XREF LIST
Ltscale: 1
Resolved
TTLBLK
T246X900
T246X800
S246B190

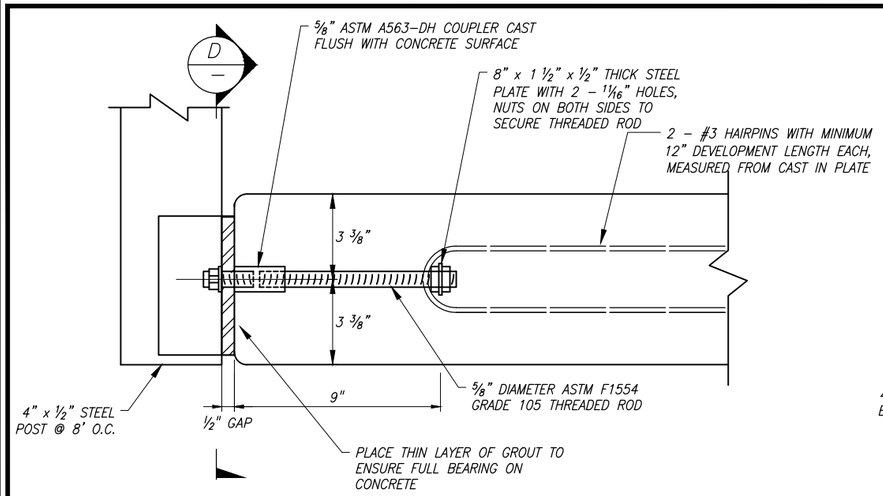

TYPICAL RAILING ATTACHMENT (A)

MID PANEL CONNECTION - REFER TO GUARDRAIL ASSEMBLY ON ARCHITECT'S DRAWINGS

NOTE: ENTIRE CAST IN ASSEMBLY TO BE HOT DIP GALVANIZED.

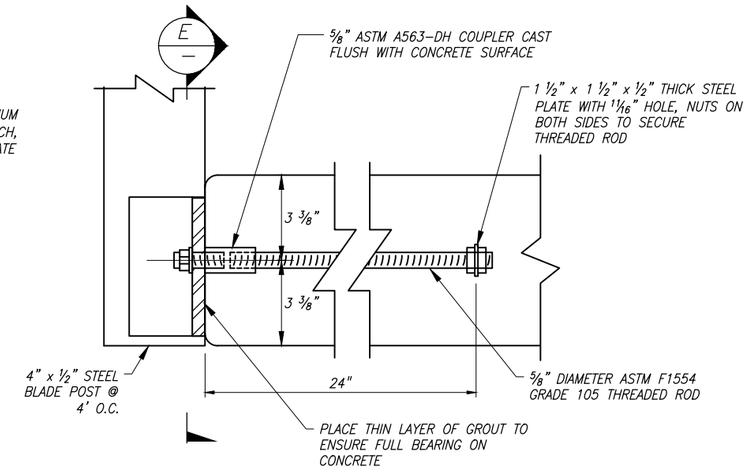

OVERLOOK RAILING ATTACHMENT (B)

OVERLOOK PANEL CONNECTION - REFER TO OVERLOOK GUARDRAIL ASSEMBLY ON ARCHITECT'S DRAWINGS

NOTE: ENTIRE CAST IN ASSEMBLY TO BE HOT DIP GALVANIZED.

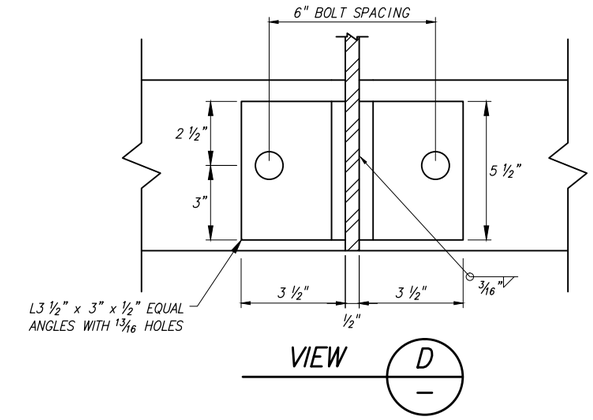

VIEW D

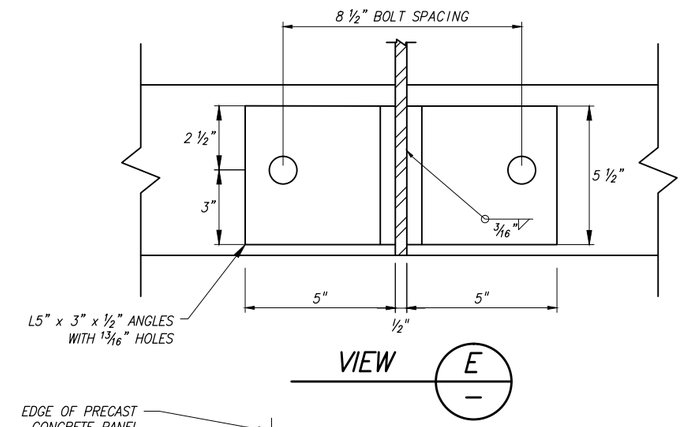

VIEW E

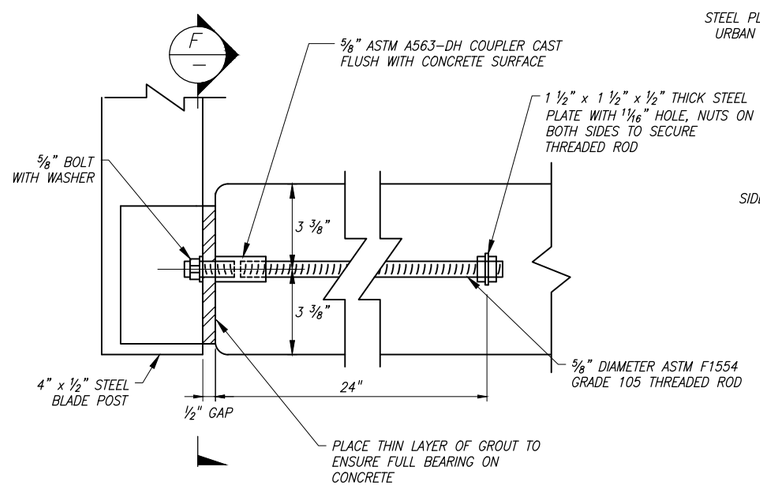

END RAILING ATTACHMENT (C)

END PANEL CONNECTION - REFER TO GUARDRAIL ASSEMBLY ON ARCHITECT'S DRAWINGS

NOTE: ENTIRE CAST IN ASSEMBLY TO BE HOT DIP GALVANIZED.

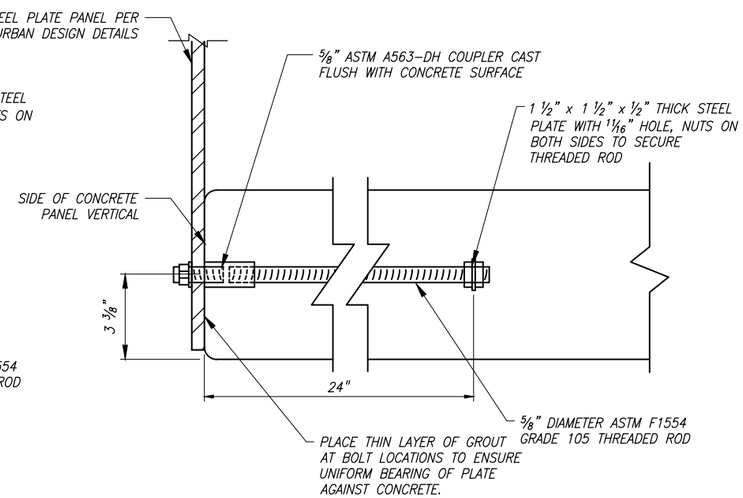

END RAILING ATTACHMENT

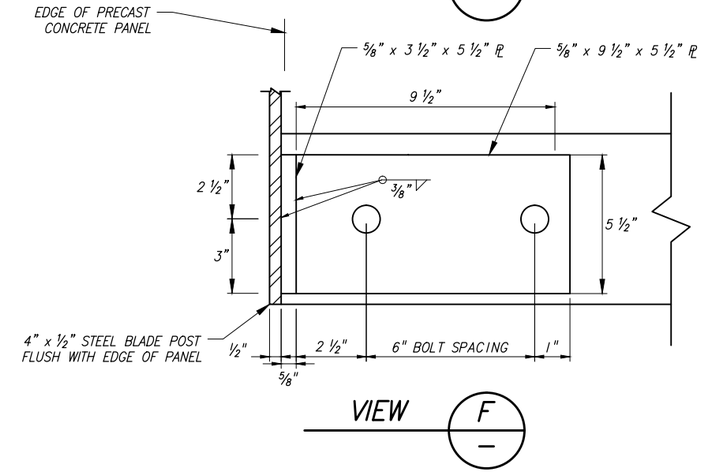

VIEW F

CALL BEFORE YOU DIG 1-800-424-5555

City of Redmond
WASHINGTON

CITY OF REDMOND
PUBLIC WORKS DEPARTMENT
15670 NE 85TH STREET - REDMOND, WA 98073-9710

Redmond Central Connector
Phase II
City Project No. 20021314
Federal Aid No. CM-1065(011)

otak
Hammel/Global Partner
11241 Willows Road NE
Suite 200
Redmond, Washington 98052
Phone: (425) 822-4446
FAX: (425) 827-9577
www.otak.com

DESIGN ENGR.	DRAWN	CHECKED
TP/SW	AK/EW	NV/DS

NO.	REVISION COMMENTS	BY	REVIEW	DATE

STEPHEN J. WILSON
STATE OF WASHINGTON
45633
PROFESSIONAL ENGINEER
1/14/16

RAILING POST CONNECTIONS

January 2016

PROJECT NO. OTAK 32246
SHEET: 50 OF: 111
DRAWING NO. 4.11

Plotted: Jan 14, 2016 - 9:44am touta K:\project\32200\32246\Dwg\4.10-4.12.dwg Layout Name: 4.11

XREF LIST
Ltscale: 1
Resolved
TTLBLK
T246X900
T246X800
S246B190

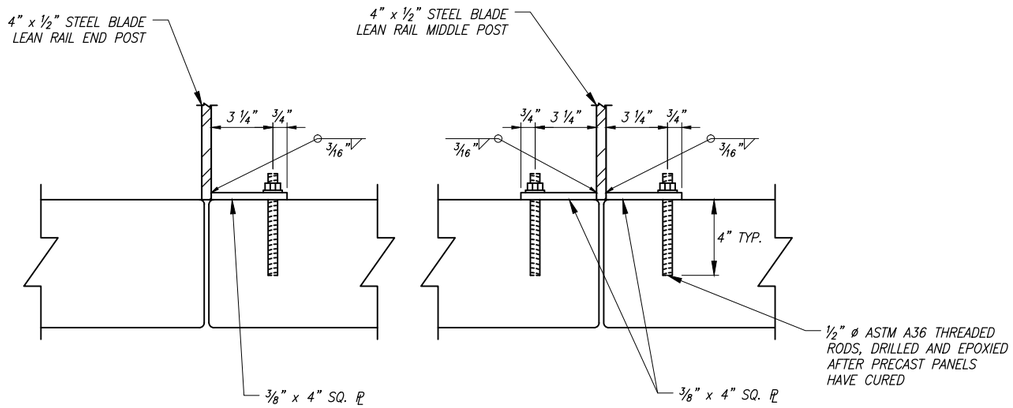

LEAN RAIL ATTACHMENT (G)

LEAN RAIL PANEL CONNECTION – REFER TO LEAN RAIL ASSEMBLY ON ARCHITECT'S DRAWINGS

NOTE:
RESIN BONDING MATERIAL SHALL BE A TWO COMPONENT EPOXY RESIN CONFORMING TO TYPE IV ASTM C881. MINIMUM TENSILE CAPACITIES SHALL BE 7,800 LBS FOR 3/8" DIAMETER AND 12,400 FOR 1/2" DIAMETER RESIN BONDED ANCHORS. SELECT RESIN BONDED ANCHOR SYSTEM FROM THE WSDOT QPL AND SUBMIT FOR REVIEW.

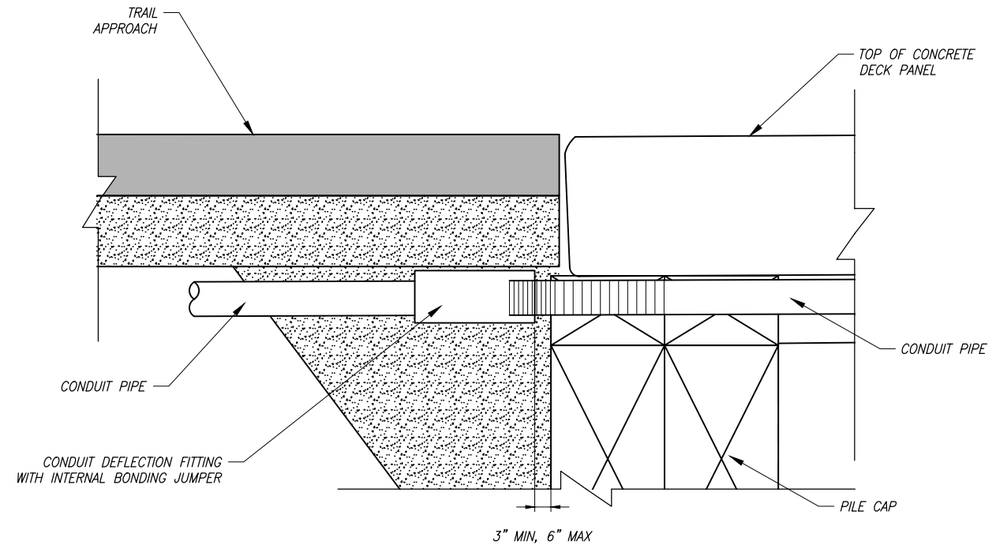

CONDUIT DEFLECTION FITTING A (H)

CONDUIT FITTING – TYPE DX FOR DEFLECTION OF 30° AND ¾" MOVEMENT. PLACE AT CONDUIT PIPE EXIT FROM STRUCTURE

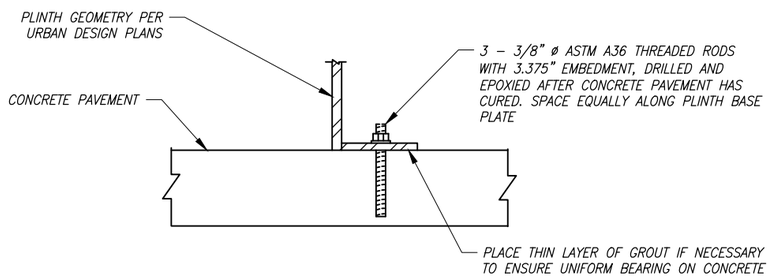

END PLINTH ATTACHMENT TO CONCRETE PAVEMENT

CALL BEFORE YOU DIG 1–800–424–5555

City of Redmond
WASHINGTON

CITY OF REDMOND
PUBLIC WORKS DEPARTMENT
15670 NE 85TH STREET – REDMOND, WA 98073–9710
Redmond Central Connector
Phase II
City Project No. 20021314
Federal Aid No. CM–1065(011)

otak
Hamm/Global Partner
11241 Willows Road NE
Suite 200
Redmond, Washington 98052
Phone: (425) 822-4446
FAX: (425) 827-9577
www.otak.com

DESIGN ENGR.	DRAWN	CHECKED
TP/SW	AK/EW	NV/DS

NO.	REVISION COMMENTS	BY	REVIEW	DATE

STEPHEN J. WILSON
STATE OF WASHINGTON
45633
PROFESSIONAL ENGINEER
1/14/16

MISCELLANEOUS BRIDGE DETAILS

January 2016

PROJECT NO. OTAK 32246
SHEET: 51 OF: 111
DRAWING NO. 4.12

Plotted: Jan 14, 2016 – 9:45am touta K:\project\32200\32246\Dwg\4.10-4.12.dwg Layout Name: 4.12

XREF LIST
Ltscale: 1
Resolved
TTLBLK
S246Y220
C246R500
S246B190
T246X800
C246R270

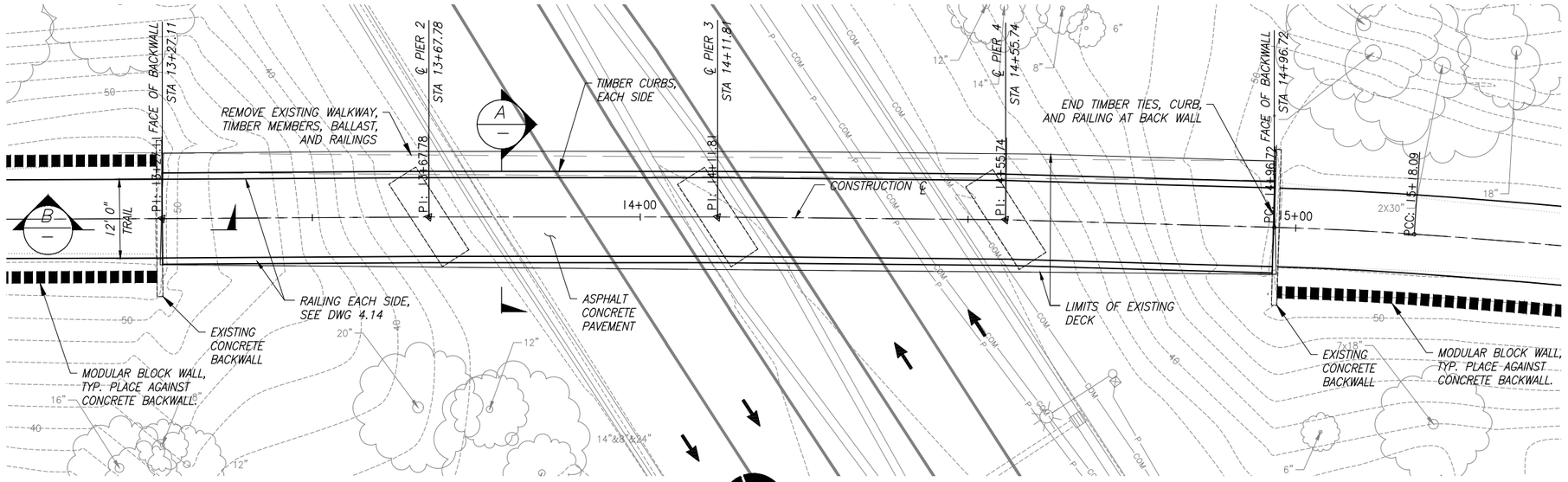

PLAN

10' 0' 10' 20'
SCALE IN FEET

GENERAL NOTES

1. BRIDGE RETROFIT DESIGNED ACCORDING TO AASHTO LRFD GUIDE SPECIFICATIONS FOR PEDESTRIAN BRIDGE DESIGN.
2. DESIGN LIVE LOADS:
   - 90 PSF UNIFORM LOAD
   - AASHTO H10

     4 KIP — 14' — 16 KIP

   - UNDER BRIDGE INSPECTION TRUCK (UBIT) 30 TON

     10 KIP — 17.3' — 20 KIP

3. ALL TIMBER SHALL BE DOUGLAS FIR NO. 1 AND BETTER AND TREATED IN ACCORDANCE WITH THE SPECIFICATION. TIMBERS MAY BE ROUGH SAWN.
4. EXISTING BRIDGE DIMENSIONS AND ELEVATIONS SHALL BE VERIFIED IN THE FIELD BY THE CONTRACTOR PRIOR TO ORDERING MATERIAL. NOTIFY ENGINEER IF DISCREPANCY OR CONFLICT EXISTS.
5. SEE AS BUILT PLANS FOR ADDITIONAL GEOMETRY OF EXISTING STRUCTURE.
6. THE CONTRACTOR IS RESPONSIBLE FOR THE STABILITY OF THE STRUCTURE DURING OF CONSTRUCTION. SEE FOR SUBMITTAL AND APPROVAL REQUIREMENTS.
7. PROVIDE CONTAINMENT AND/OR CATCHMENT IN ORDER TO PREVENT CONSTRUCTION DEBRIS OR MATERIAL FROM FALLING INTO THE TRAVEL LANES.

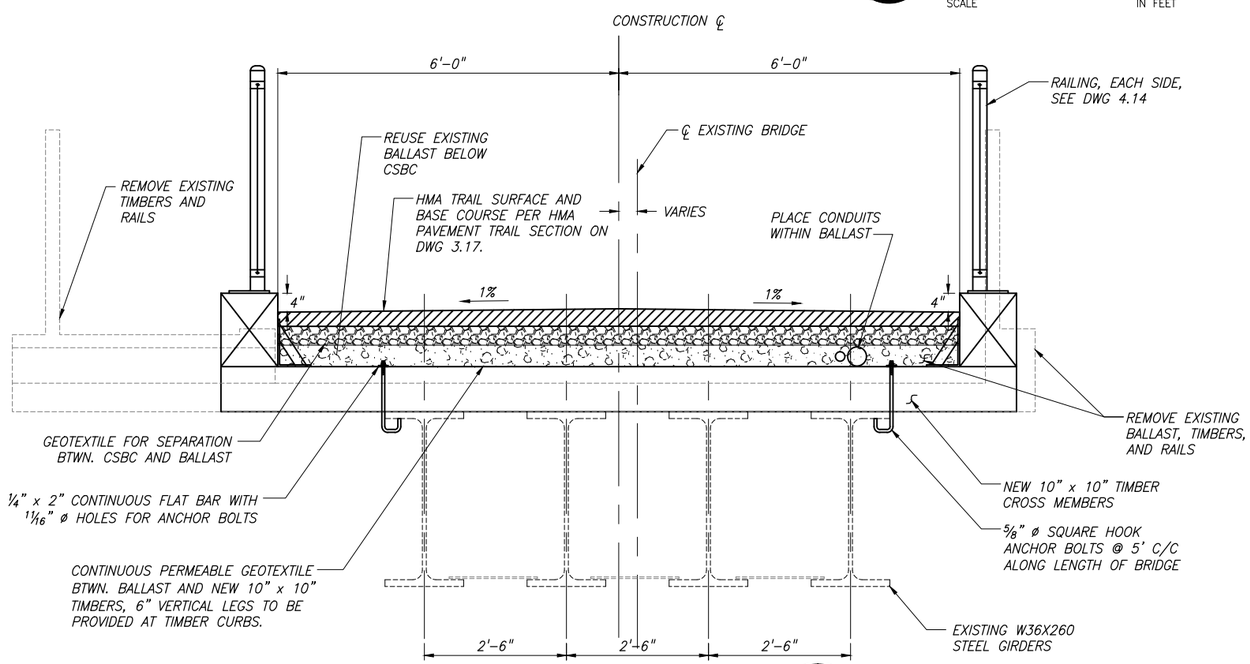

TYPICAL DECK SECTION A

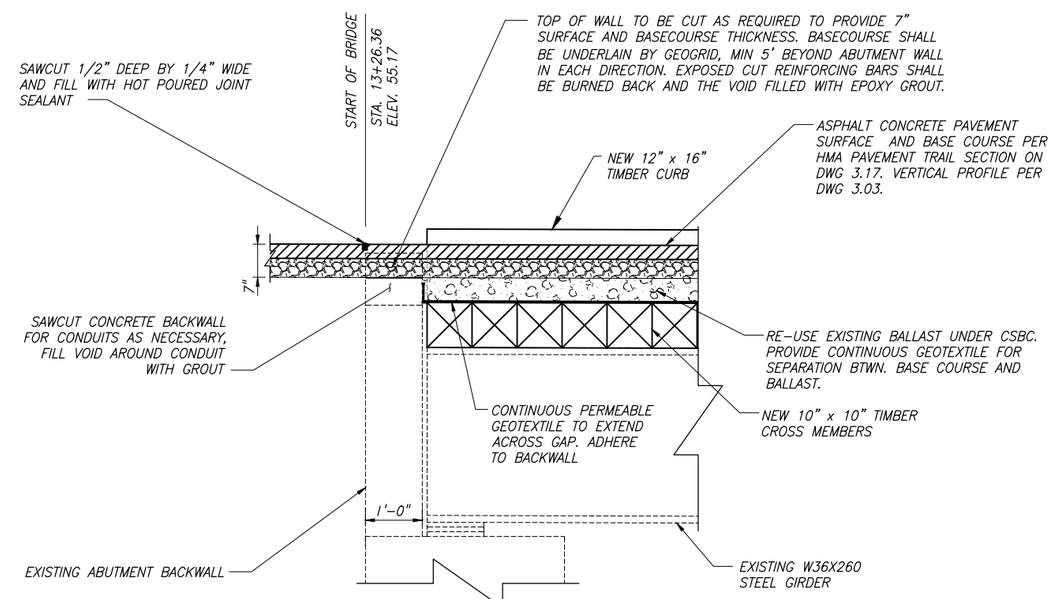

TYPICAL ABUTMENT SECTION B

PIER 1 AND PIER 5

CALL BEFORE YOU DIG 1-800-424-5555

CityofRedmond WASHINGTON

CITY OF REDMOND
PUBLIC WORKS DEPARTMENT
15670 NE 85TH STREET – REDMOND, WA 98073-9710

Redmond Central Connector
Phase II
City Project No. 20021314
Federal Aid No. CM-1065(011)

otak
HammGlobal Partner
11241 Willows Road NE
Suite 200
Redmond, Washington 98052
Phone: (425) 822-4446
FAX: (425) 827-9577
www.otak.com

DESIGN ENGR.	DRAWN	CHECKED
TP/SW	AK/EW	NV/DS

NO.	REVISION COMMENTS	BY	REVIEW	DATE

STEPHEN J. WILSON — STATE OF WASHINGTON — 45633 — REGISTERED PROFESSIONAL ENGINEER — 1/14/16

BRIDGE LAYOUT 154TH AVE NE CROSSING

January 2016

PROJECT NO. OTAK 32246
SHEET: 52 OF: 111
DRAWING NO. 4.13

Plotted: Jan 14, 2016 – 9:46am touta K:\project\32200\32246\Dwg\4-13-4.14.dwg Layout Name: 4.13

XREF LIST
Ltscale: 1
Resolved
TTLBLK
S246Y220
C246R500
S246B190
T246X800
C246R270

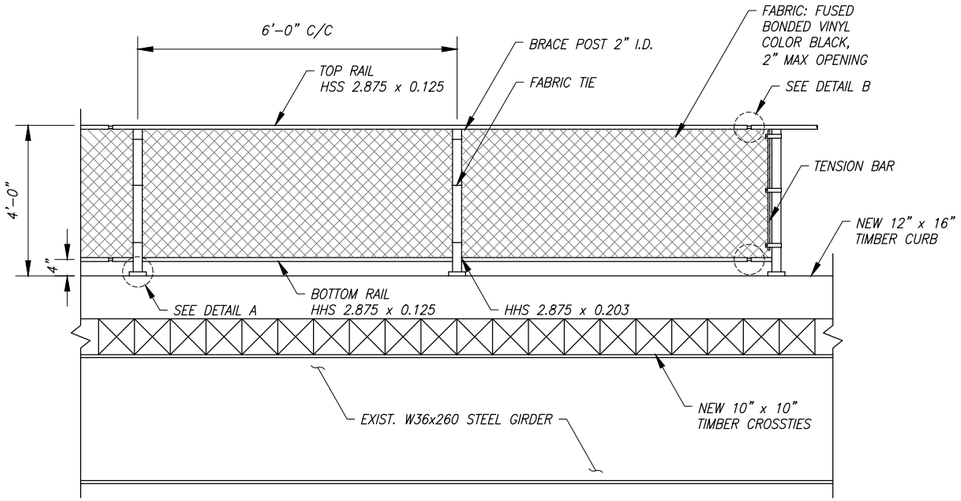

NOTE 1: ALL NON-BONDED VINYL COMPONENTS TO BE POWDER COATED (BLACK)
NOTE 2: TOP RAIL FOLLOWS THE TRAIL VERTICAL PROFILE, REFER TO DWG 3.03. POSTS SHALL REMAIN VERTICAL.

RAILING ELEVATION

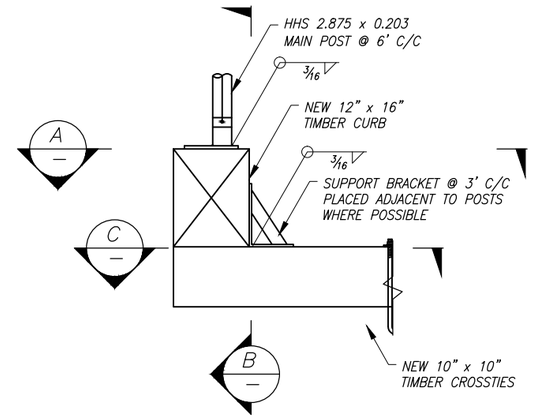

DETAIL A

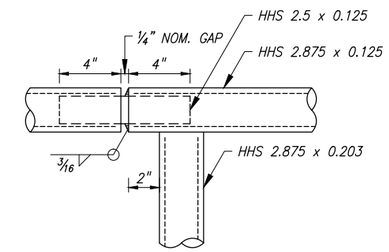

NOTE: SIMILAR FOR BOTTOM RAIL

DETAIL B

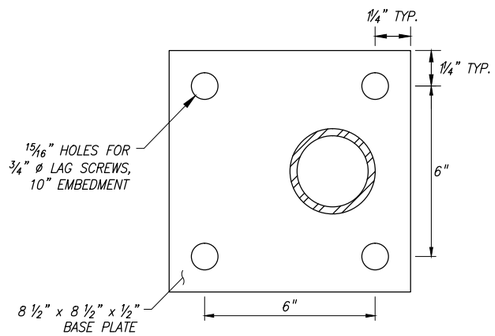

SECTION A

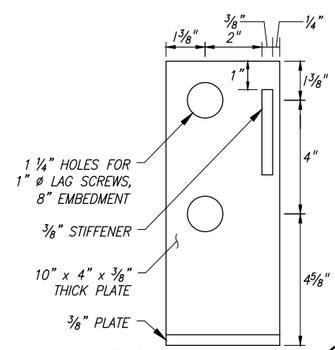

SECTION B

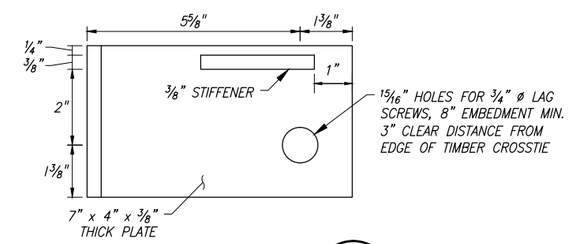

SECTION C

CALL BEFORE YOU DIG 1-800-424-5555

CityofRedmond
WASHINGTON

CITY OF REDMOND
PUBLIC WORKS DEPARTMENT
15670 NE 85TH STREET - REDMOND, WA 98073-9710

Redmond Central Connector
Phase II
City Project No. 20021314
Federal Aid No. CM-1065(011)

otak
HaemmiGlobal Partner
11241 Willows Road NE
Suite 200
Redmond, Washington 98052
Phone: (425) 822-4446
FAX: (425) 827-9577
www.otak.com

DESIGN ENGR.	DRAWN	CHECKED
TP/SW	AK/EW	NV/DS

NO.	REVISION COMMENTS	BY	REVIEW	DATE

STATE OF WASHINGTON
STEPHEN J. WIANCO
45633
PROFESSIONAL ENGINEER
1/14/16

DECK REPLACEMENT DETAILS
154TH AVE NE CROSSING

January 2016

PROJECT NO.
OTAK 32246

SHEET: 53 OF: 111

DRAWING NO.
4.14

Plotted: Jan 14, 2016 - 9:47am toula K:\project\32200\32246\Dwg\4.13-4.14.dwg Layout Name: 4.14