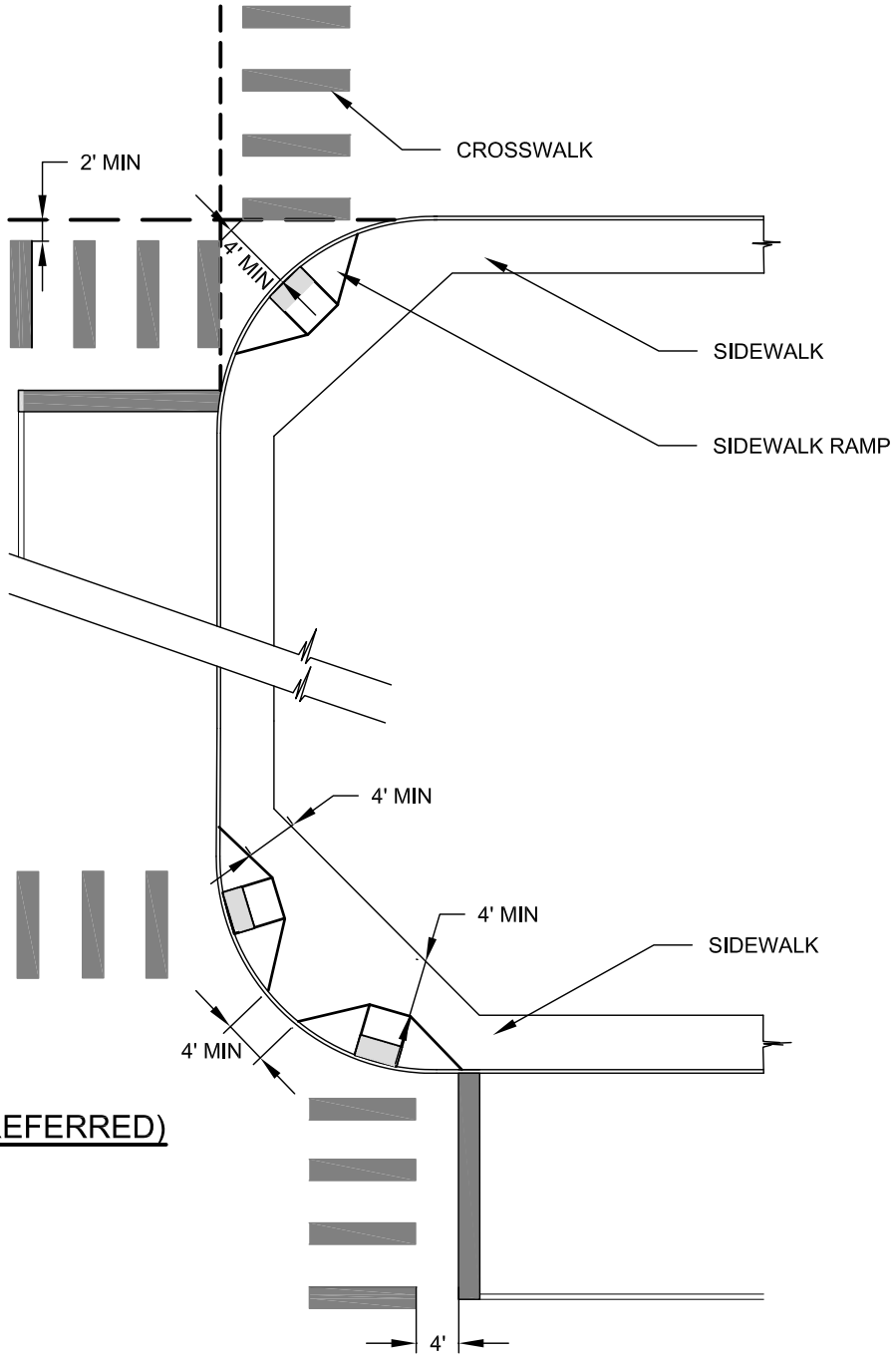

SINGLE CURB RAMP LAYOUT
NTS

DUAL CURB (PREFERRED) RAMP LAYOUT
NTS

NOTES:

1. SEE STANDARD DETAILS F-40.12-01, F-40.14-01, F-40.15-01, AND F-40.16-01 FOR ADDITIONAL DETAILS ON RAMP CONSTRUCTION.
2. SEE STANDARD DETAILS 311, 311A & 311B FOR ADDITIONAL DETAILS ON CROSSWALK AND STOP BAR CONSTRUCTION.
3. RAMP MUST BE WITHIN CROSSWALK.

Rob Crittenden

APPROVED BY: ROB CRITTENDEN
TRAFFIC OPERATIONS SAFETY AND ENGINEERING MANAGER

REVISION DATE: JULY 01, 2014

CityofRedmond WASHINGTON

STANDARD DETAILS

SIDEWALK RAMP LAYOUT

FILE NAME: DG01.DWG

DETAIL NUMBER: **DG01**

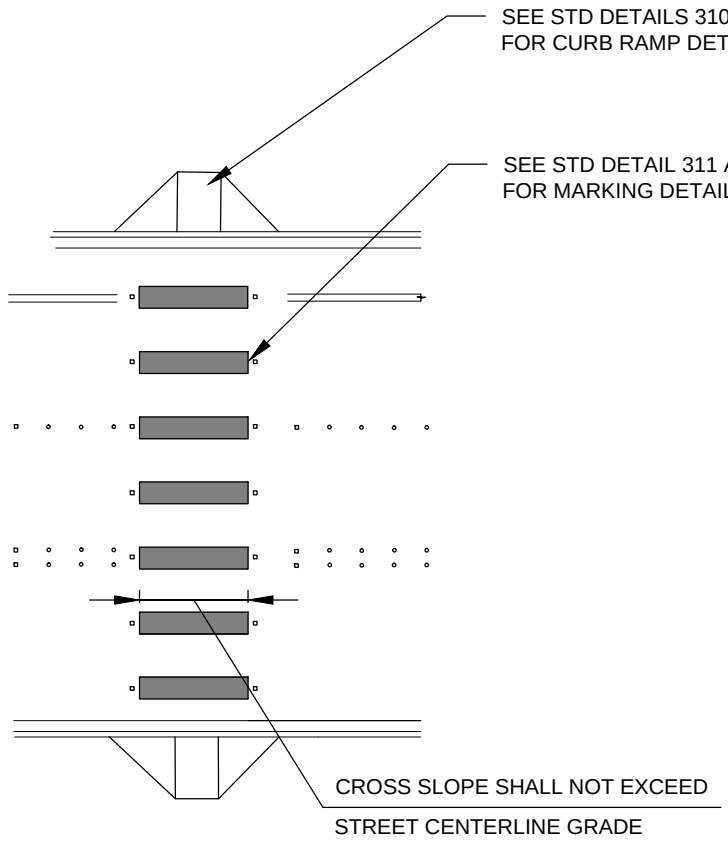

MID BLOCK CROSSWALK

NTS

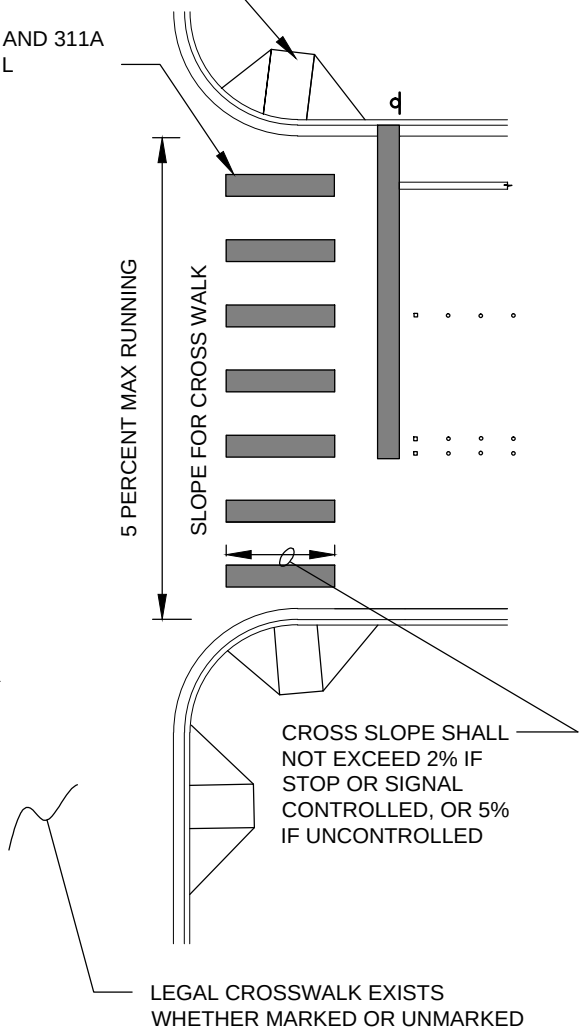

CROSSWALKS AT INTERSECTION

NTS

NOTES:

1. STANDARDS APPLY TO BOTH MARKED AND UNMARKED CROSSWALKS.
2. INSTALLATION SHALL REFLECT "REVISED DRAFT GUIDELINES FOR ACCESSIBLE PUBLIC RIGHTS-OF-WAY" DATED NOVEMBER 2012, EXCEPT AS APPROVED BY THE TRAFFIC ENGINEER.
3. RAMPS SHALL BE INSTALLED FOR ALL LEGAL CROSSWALKS, WHETHER MARKED OR UNMARKED, EXCEPT AS APPROVED BY THE TRAFFIC ENGINEER.
4. RAMP CROSS SLOPE SHALL NOT EXCEED THE CENTERLINE GRADE OF THE CROSSWALK.
5. SIDEWALK GRADE SHALL NOT EXCEED THE GENERAL GRADE OF THE PARALLEL STREET.

Rob Crittenden

APPROVED BY: ROB CRITTENDEN
TRAFFIC OPERATIONS SAFETY AND ENGINEERING MANAGER

REVISION DATE: JULY 01, 2015

CityofRedmond WASHINGTON

STANDARD DETAILS

CROSSWALK ACCESSIBILITY DESIGN STANDARDS

FILE NAME: DG02.DWG

DETAIL NUMBER: DG02

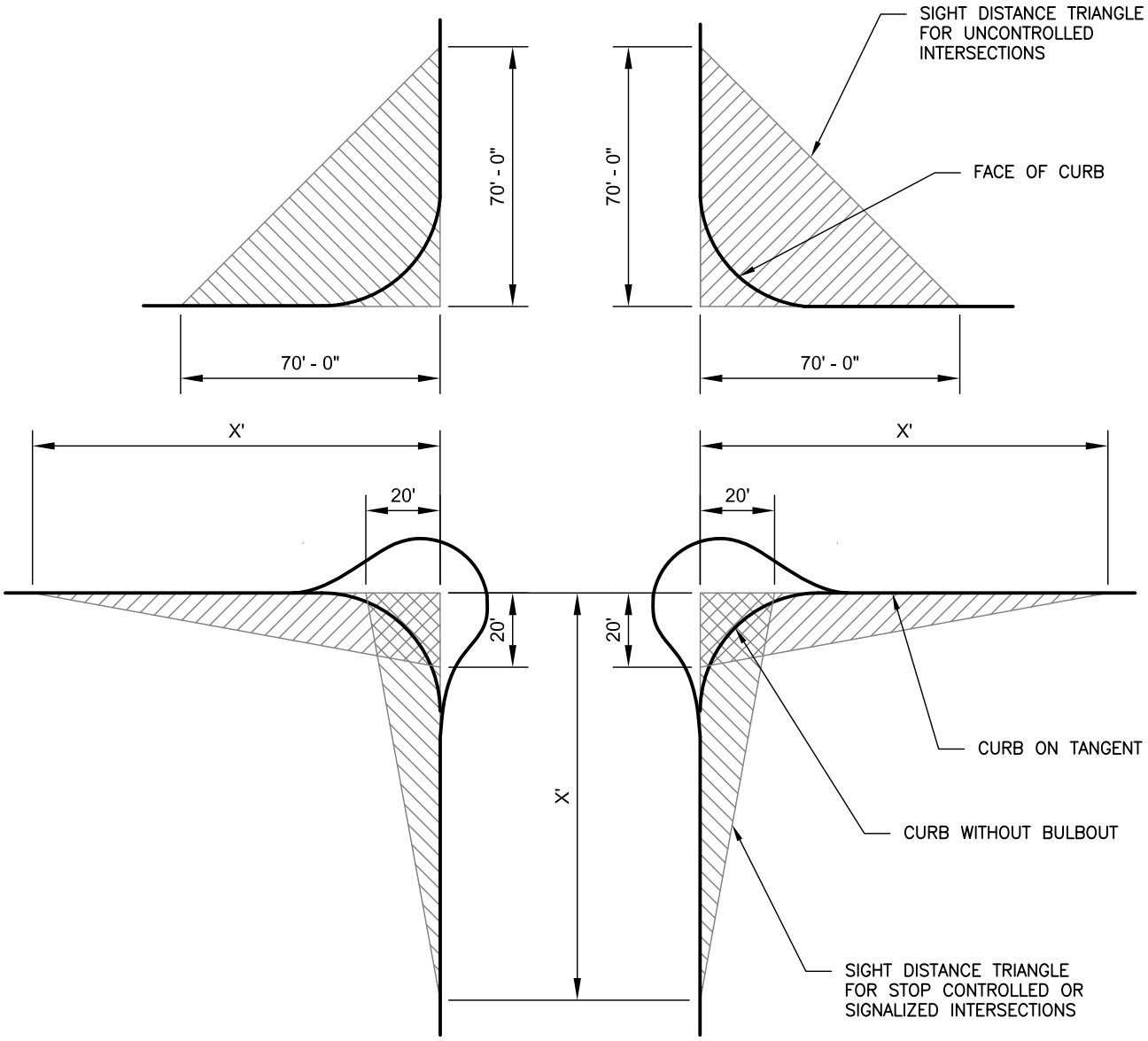

PLAN VIEW

NTS

NOTES:

1. X IS a) 100 FEET ALONG ARTERIAL STREETS OR b) 65 FEET ALONG LOCAL ACCESS STREETS.
2. SHOW TRIANGLES FOR STREET AND NON SINGLE FAMILY RESIDENTIAL DRIVEWAY INTERSECTIONS.
3. SIGHT DISTANCE TRIANGLE LEGS ALIGN WITH CURB ON TANGENT.
4. SIGHT DISTANCE TRIANGLE IS APPLICABLE BETWEEN A HEIGHT OF EIGHT AND TWO FEET ABOVE GROUND. NO SIGHT OBSTRUCTIONS SHALL EXIST PER RZC 21.52.040

Rob Crittenden APPROVED BY: ROB CRITTENDEN TRAFFIC OPERATIONS SAFETY AND ENGINEERING MANAGER	CityofRedmond WASHINGTON	STANDARD DETAILS **SIGHT DISTANCE TRIANGLE**
REVISION DATE: JULY 01, 2014		FILE NAME: DG03.DWG / DETAIL NUMBER: **DG03**

INTERSECTION HEAD NUMBERS

NTS

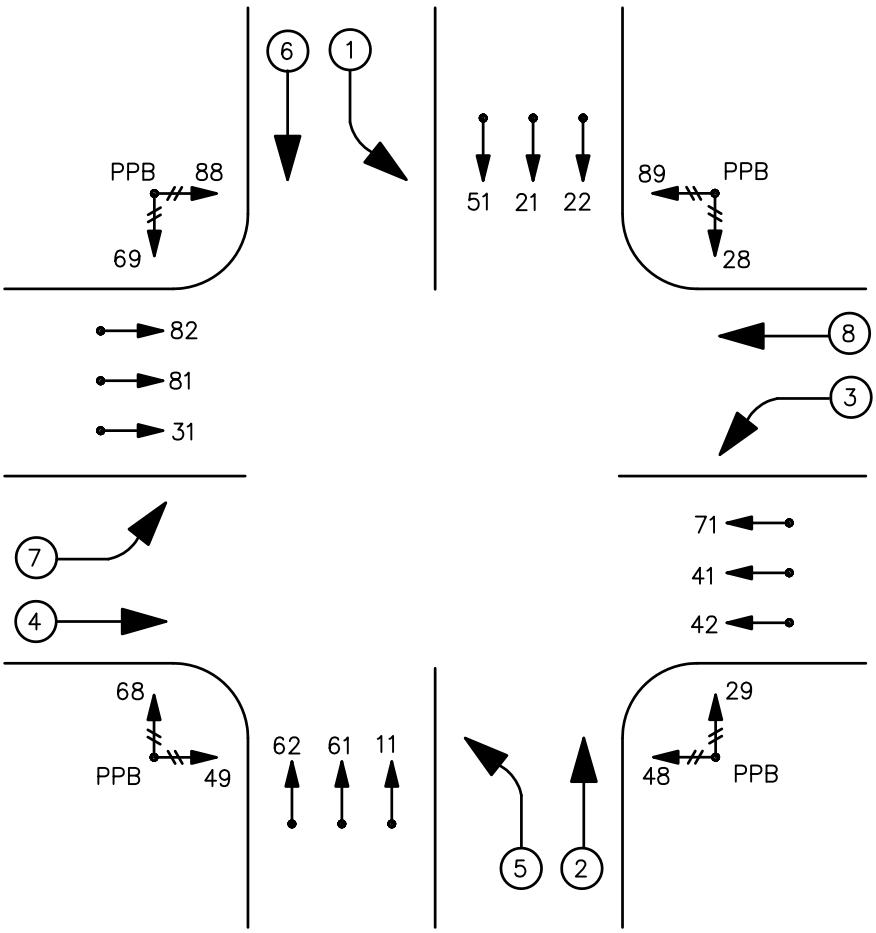

PHASING SEQUENCE DIAGRAM

NTS

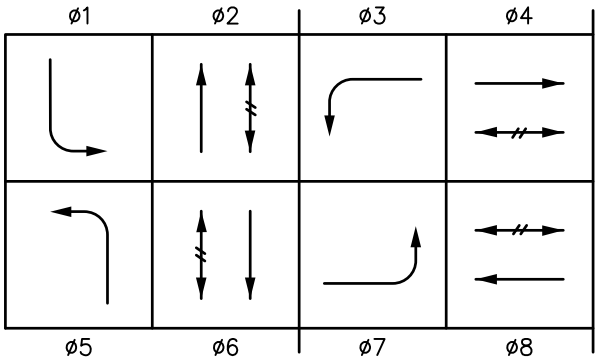

NOTE:

PHASE 2 IS TYPICALLY NORTHBOUND. CONFIRM WITH TRAFFIC OPERATIONS DIVISION. EXCEPTIONS MAY OCCUR, SUCH AS FOR CONSISTENCY ALONG A CURVING ARTERIAL.

Rob Crittenden

APPROVED BY: ROB CRITTENDEN
TRAFFIC OPERATIONS SAFETY AND ENGINEERING MANAGER

REVISION DATE: JULY 01, 2014

CityofRedmond
WASHINGTON

STANDARD DETAILS

STANDARD INTERSECTION HEAD NUMBERS AND PHASING

FILE NAME: DG04.DWG

DETAIL NUMBER: **DG04**

GEOMETRY

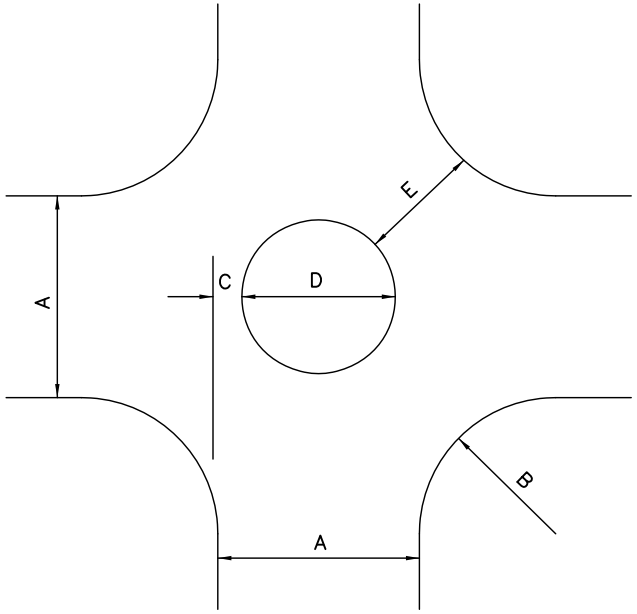

NOTES:

1. USE DIMENSION SCHEDULE AS A DESIGN GUIDE. FINAL DIMENSIONS TO BE DETERMINED BY THE ENGINEER.
2. FOR PLANTER ISLAND SPECIFICATIONS SEE TRAFFIC CIRCLE DETAIL SD478.

OPTIMUM CRITERIA

OFFSET DISTANCE (C)	OPENING WIDTH (E)
5.5' MAX.	16' MIN.
5.0'	17' ±
4.5'	18' ±
4.0'	19' ±
3.5' OR LESS	20' ±

DIMENSIONS

A STREET WIDTH	B CURB RETURN RADIUS	C OFFSET DISTANCE	D CIRCLE DIAMETER	E OPENING WIDTH
20'	<15'	RECONSTRUCT CURBS		
	15'	5.5'	9'	16'+
	18'	5.0'	10'	17'+
	20'	4.5'	11'	18'–
	25'	4.0'	12'	19'+
24'	<12'	RECONSTRUCT CURBS		
	12'	5.5'	13'	16'
	15'	5.0'	14'	17'–
	20'	4.5'	15'	18'+
	25'	3.5'	17'	20'–
25'	<12'	RECONSTRUCT CURBS		
	12'	5.5'	14'	16'+
	15'	5.0'	15'	17'–
	18'	4.5'	16'	18'–
	20'	4.5'	16'	18'+
	25'	3.5'	18'	20'–
30'	10'	5.5'	19'	16'+
	12'	5.0'	20'	17'–
	15'	5.0'	20'	17'+
	18'	4.5'	21'	18'+
	20'	4.0'	22'	19'+
	25'	3.0'	24'	20'
32'	10'	5.5'	21'	16'+
	12'	5.0'	22'	17'–
	15'	4.5'	23'	18'–
	18'	4.0'	24'	19'–
	20'	4.0'	24'	19'+
	25'	2.5'	27'	20'
36'	10'	5.0'	26'	17'–
	12'	5.0'	26'	17'+
	15'	4.5'	27'	18'+
	18'	4.0'	28'	19'+
	20'	3.5'	29'	20'–
	25'	1.5'	33'	20'
40'	10'	5.0'	30'	17'+
	12'	4.5'	31'	18'+
	15'	4.0'	32'	19'–
	18'	3.5'	33'	20'–
	20'	3.0'	34'	20'
	25'	1.0'	38'	20'

Rob Crittenden

APPROVED BY: ROB CRITTENDEN
TRAFFIC OPERATIONS SAFETY AND ENGINEERING MANAGER

REVISION DATE: JULY 01, 2014

City of Redmond WASHINGTON

TRAFFIC CIRCLE DIMENSIONS

STANDARD DETAILS

FILE NAME: DG05.DWG

DETAIL NUMBER: **DG05**

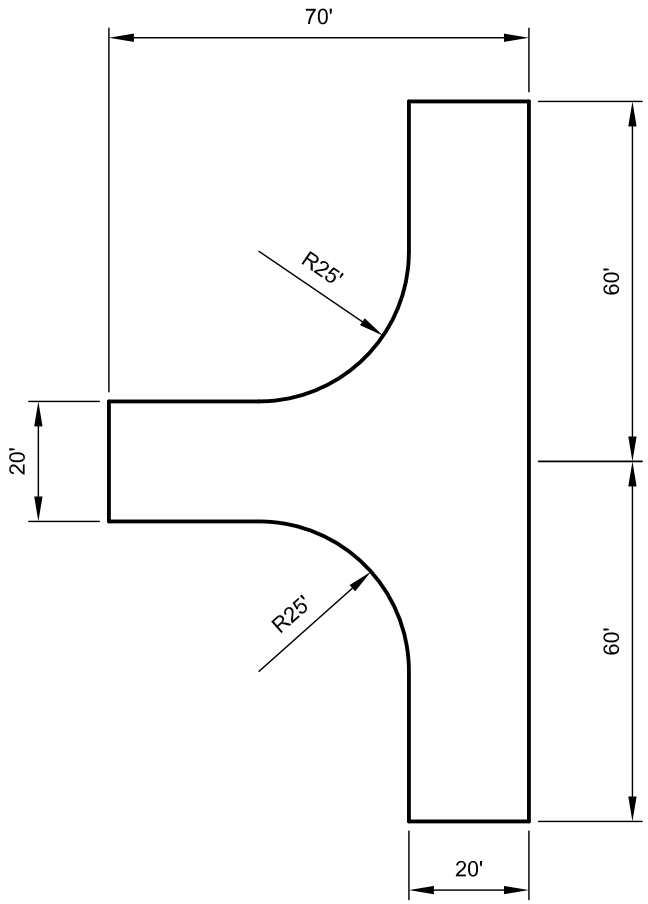

APPROVED BY: TODD SHORT
ASSISTANT FIRE MARSHAL

REVISION DATE: JULY 01, 2014

CityofRedmond
WASHINGTON

STANDARD DETAILS

120' HAMMERHEAD ALTERNATE

FILE NAME: DG06.DWG

DETAIL NUMBER: **DG06**

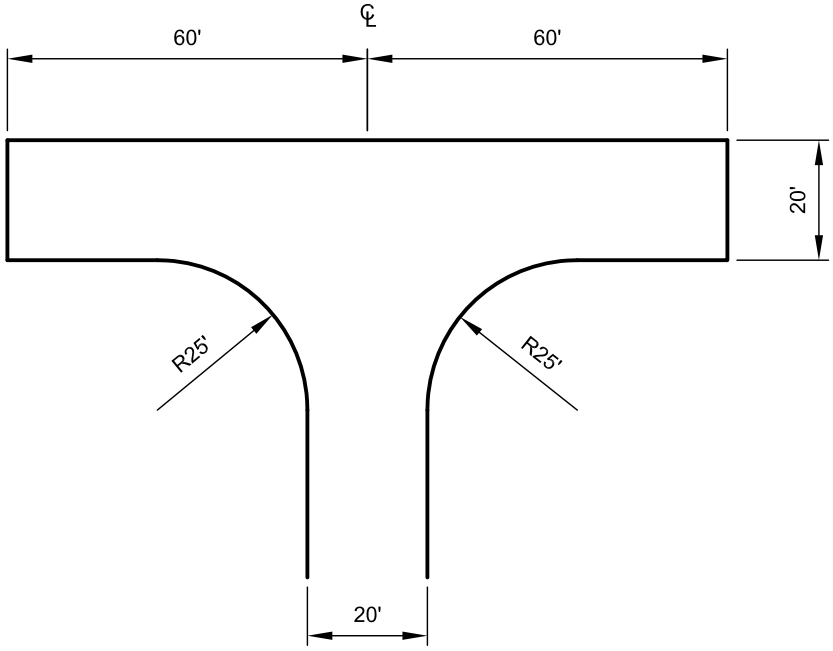

APPROVED BY: TODD SHORT
ASSISTANT FIRE MARSHAL

REVISION DATE: JULY 01, 2014

CityofRedmond
WASHINGTON

STANDARD DETAILS

120' HAMMERHEAD

FILE NAME: DG07.DWG

DETAIL NUMBER: **DG07**

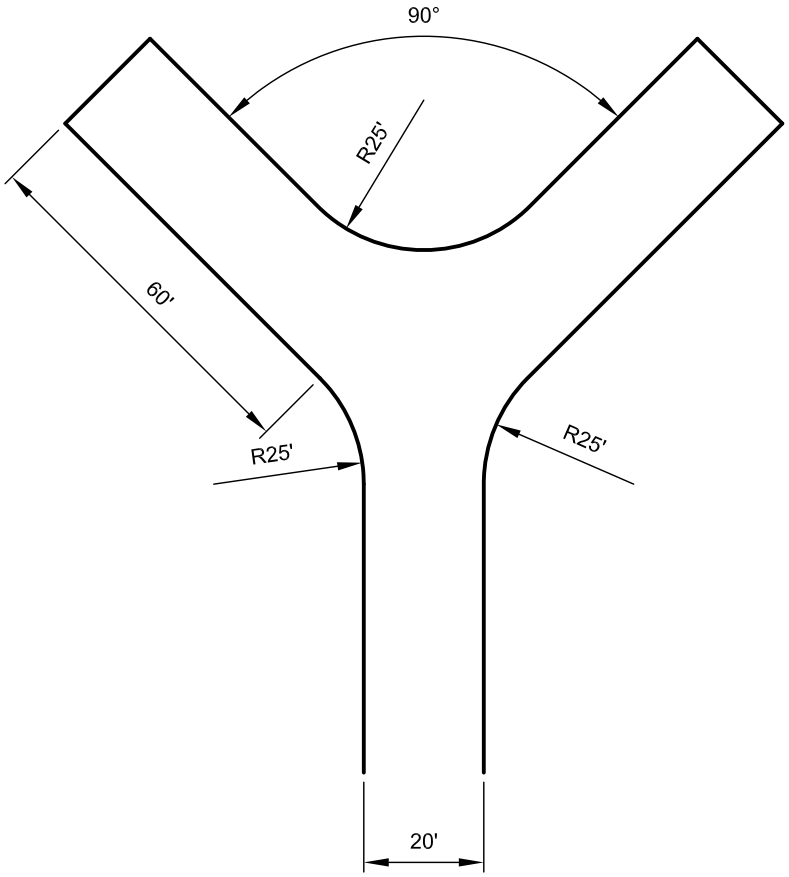

APPROVED BY: TODD SHORT
ASSISTANT FIRE MARSHAL

REVISION DATE: JULY 01, 2014

CityofRedmond
WASHINGTON

STANDARD DETAILS

60' Y

FILE NAME: DG08.DWG

DETAIL NUMBER: **DG08**

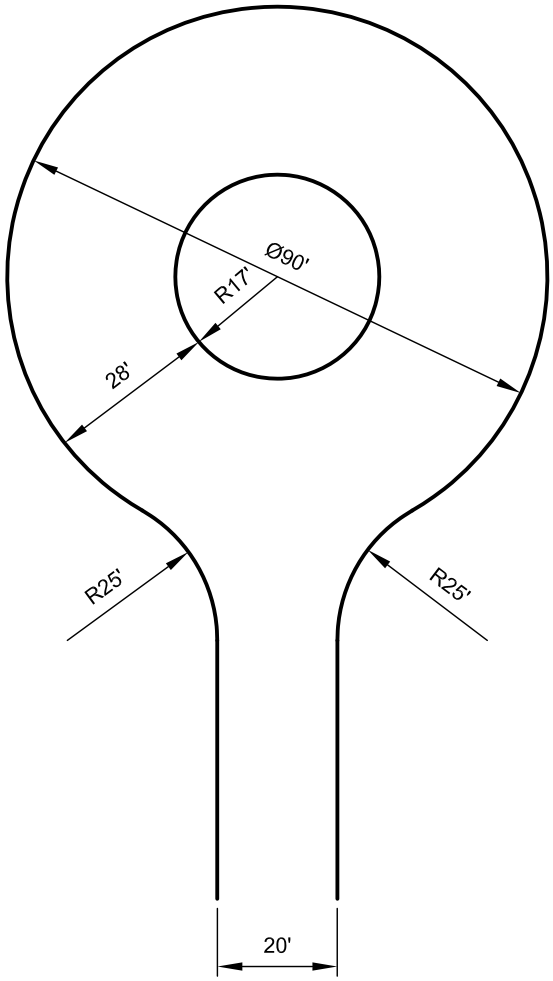

APPROVED BY: TODD SHORT
ASSISTANT FIRE MARSHAL

REVISION DATE: JULY 01, 2014

CityofRedmond
WASHINGTON

STANDARD DETAILS

90' CUL-DE-SAC

FILE NAME: DG09.DWG

DETAIL NUMBER: **DG09**

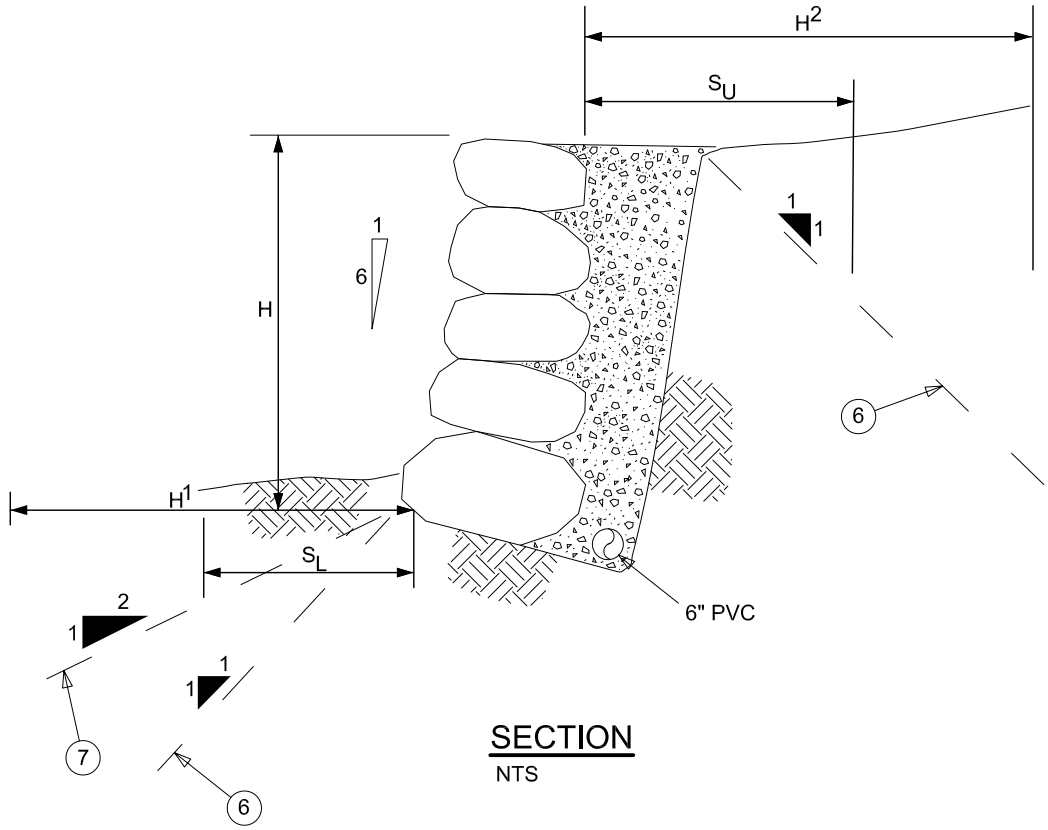

SECTION

NTS

NOTES:

1. FREE-STANDING HEIGHT OF ROCK WALL, H = VARIES PER DESIGN
   ALL ROCKERY WALLS OF GREATER THAN 4 FEET IN MAXIMUM FREE STANDING HEIGHT SHALL BE DESIGNED BY GEOTECHNICAL ENGINEER
2. MINIMUM SETBACK DISTANCE IN WHICH NO TEMPORARY EXCAVATION OR TRENCHING MAY BE PERFORMED, S_U = 5 FEET
3. MINIMUM SETBACK DISTANCE IN WHICH NO TEMPORARY EXCAVATION OR TRENCHING MAY BE PERFORMED, S_L = 2/3H
4. MINIMUM DISTANCE IN WHICH NO PERMANENT REMOVAL OF SUBGRADE IS ALLOWED, H^1 = 10 FEET
5. MINIMUM DISTANCE IN WHICH NO EXCAVATION OF MATERIAL OR ANY SURCHARGE IS ALLOWED, H^2 = 10 FEET
6. IMAGINARY LINE BELOW WHICH NO EXCAVATION IS ALLOWED ABOVE OR BELOW WALL= 1H:1V
7. IMAGINARY LINE DEPICTING BOUNDS FOR MAXIMUM FINISHED GRADE OR PERMANENT EXCAVATION = 2H:1V
8. DRAINAGE IS REQUIRED BEHIND ROCK WALL, IF ADJACENT TO CITY RIGHT-OF-WAY, AND HEIGHT (H) GREATER THAN 18 INCHES.

Paulette Norman APPROVED BY: PAULETTE NORMAN DEVELOPMENT ENGINEERING MANAGER	CityofRedmond WASHINGTON	STANDARD DETAILS **TYPICAL ROCKERY DETAIL POST CONSTRUCTION GUIDELINES**
REVISION DATE: JULY 01, 2014		FILE NAME: DG10.DWG / DETAIL NUMBER: **DG10**

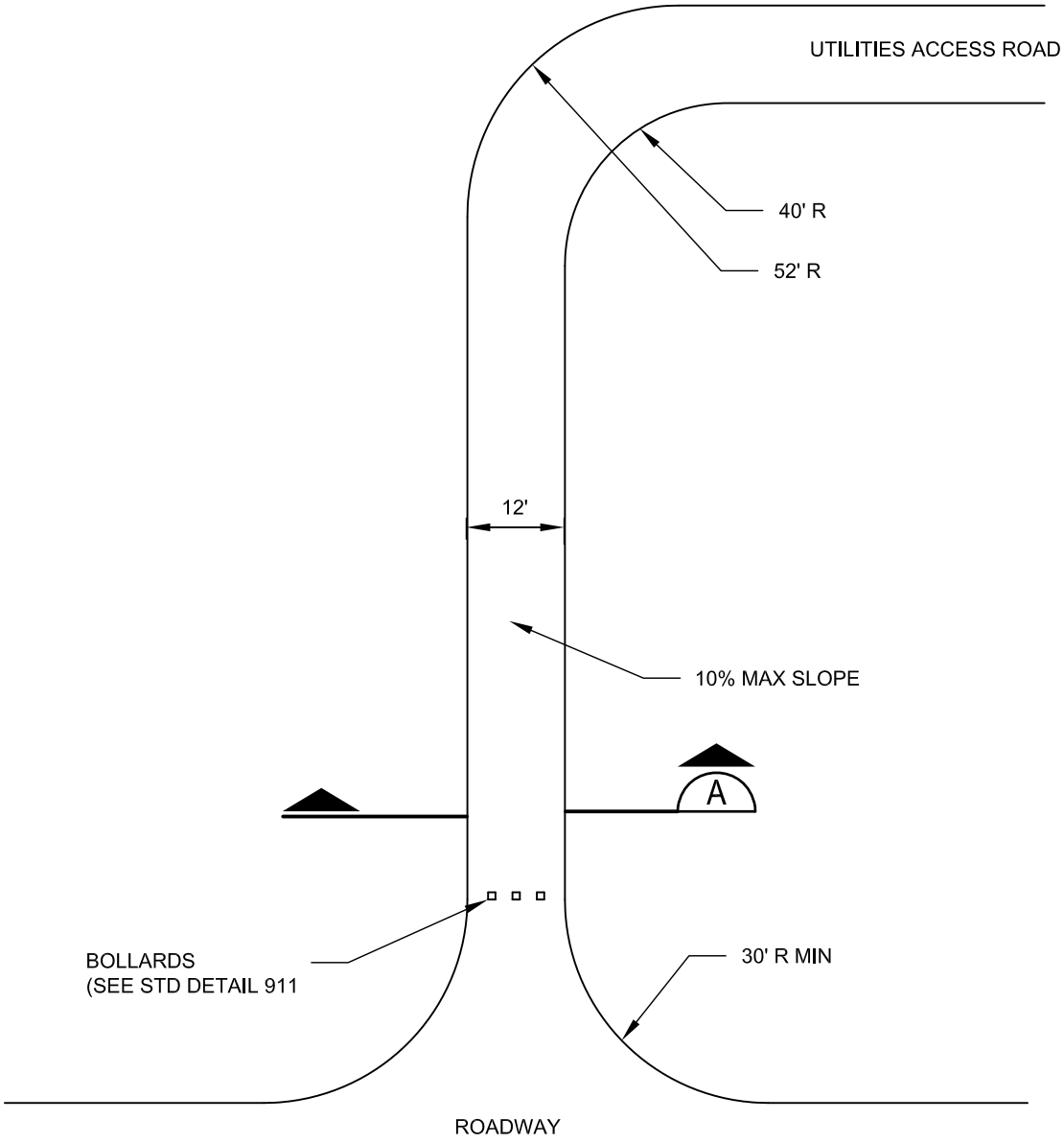

PLAN VIEW
NTS

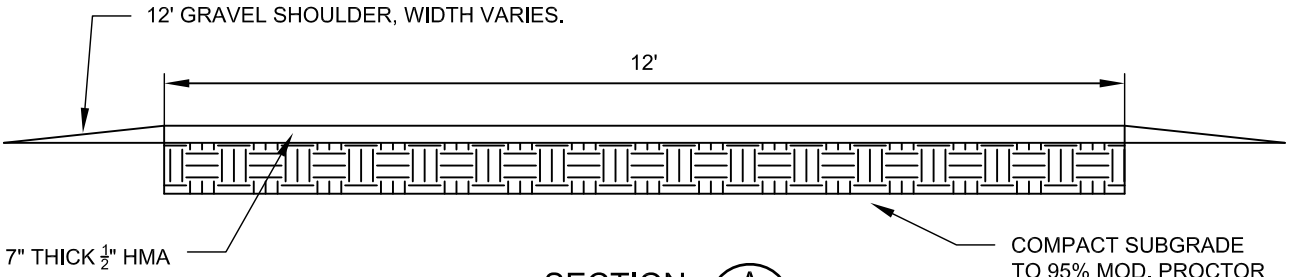

SECTION A
NTS

Gary M. Schimek

APPROVED BY: GARY M. SCHIMEK
NATURAL RESOURCES/STORMWATER ENGINEERING MANAGER

REVISION DATE: JULY 01, 2015

CityofRedmond
WASHINGTON

STANDARD DETAILS

UTILITIES ACCESS ROAD

FILE NAME: SDDG11.DWG

DETAIL NUMBER: **DG11**

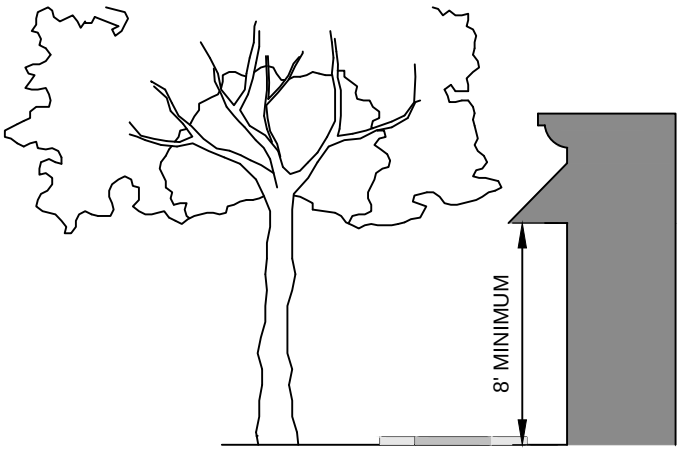

SECTION A

NTS

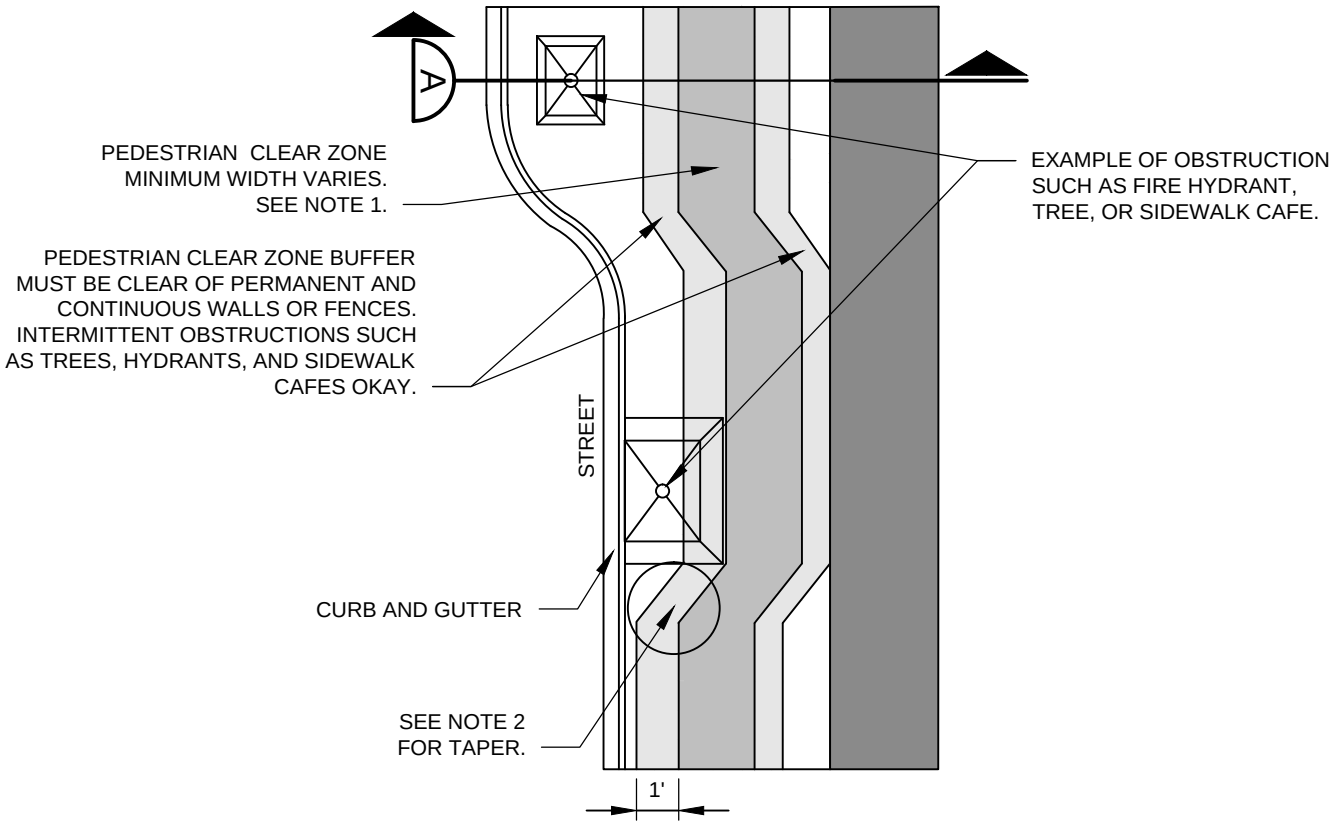

PLAN VIEW

NTS

NOTES:

1. PEDESTRIAN CLEAR ZONE SHALL BE 6' MINIMUM IN DOWNTOWN AND OVERLAKE URBAN CENTERS. 6' MINIMUM IN PEDESTRIAN PRIORITY ZONES. 5' MINIMUM IN THE REST OF THE CITY. SEE TRANSPORTATION MASTER PLAN APPENDIX F-DESIGN GUIDANCE FOR MAP OF PEDESTRIAN PRIORITY ZONES
2. PROVIDE MINIMUM 1.5:1 TAPER IN URBAN CENTERS AND PEDESTRIAN PRIORITY ZONES. PROVIDE MINIMUM 1:1 TAPER IN REST OF THE CITY.

APPROVED BY: DONALD CAIRNS TRANSPORTATION PLANNING AND ENGINEERING MANAGER	CityofRedmond WASHINGTON	STANDARD DETAILS PEDESTRIAN CLEAR ZONE
REVISION DATE: JULY 01, 2015		FILE NAME: DG12_2015.DWG DETAIL NUMBER: DG12