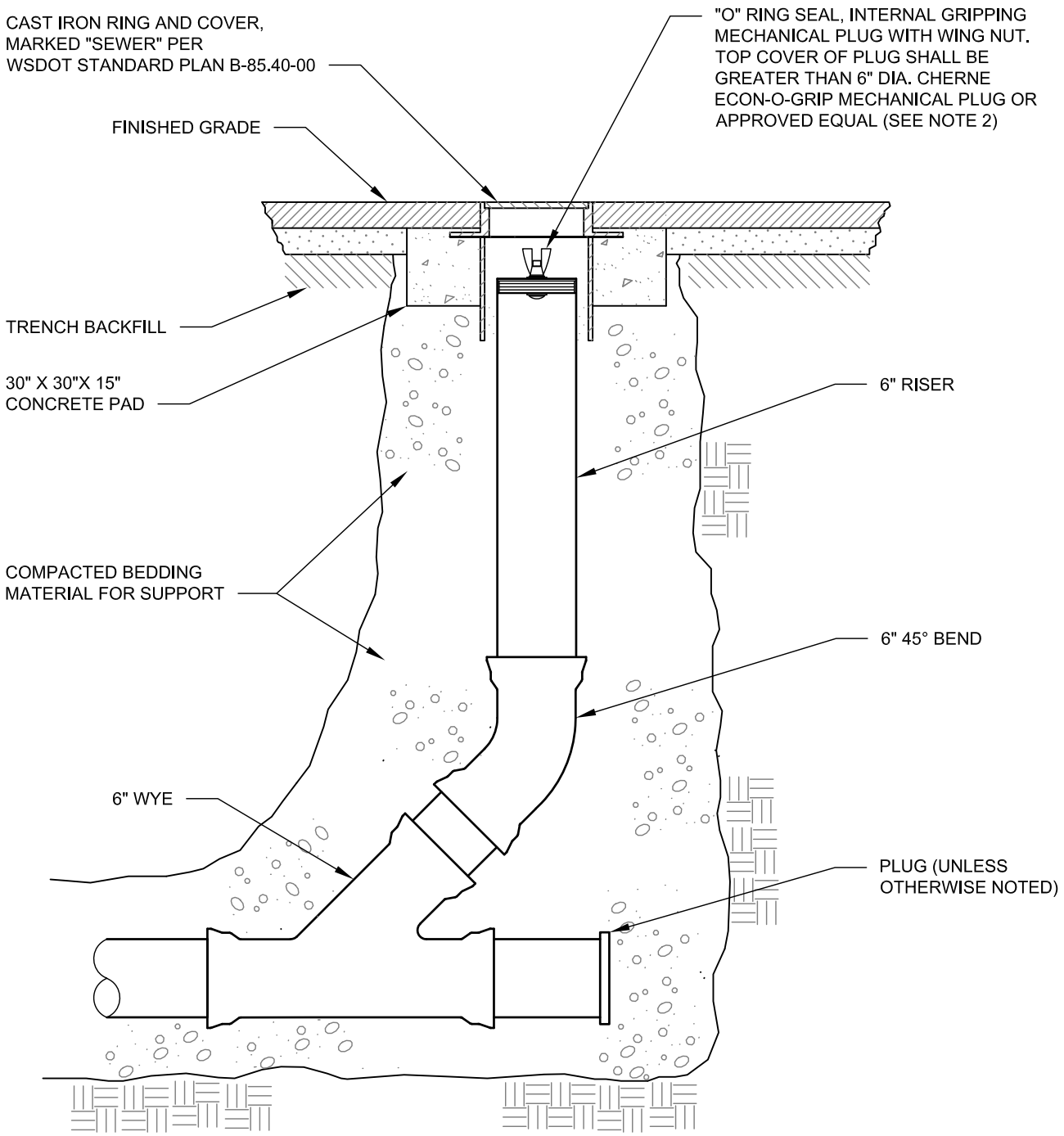

SECTION

NTS

NOTES:

1. IN NON-SINGLE FAMILY RESIDENTIAL DEVELOPMENTS WHEN THE CLEANOUT IS LOCATED IN THE LANDSCAPE AREA, INSTALL A VALVE MARKER POST (NOT SHOWN), PAINTED FOREST GREEN (FARWEST PAINT, #388).
2. DEFORM END OF THREAD ON MECHANICAL PLUG BOLT TO SECURE WING NUT IN PLACE.

APPROVED BY: SCOTT THOMASSON WATER/WASTEWATER ENGINEERING MANAGER	CityofRedmond WASHINGTON	STANDARD DETAILS **SIDE SEWER CLEANOUT**
REVISION DATE: JULY 01, 2014		FILE NAME: SD810.DWG — DETAIL NUMBER: **810**

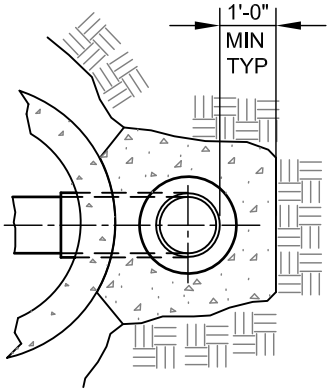

PLAN
NTS

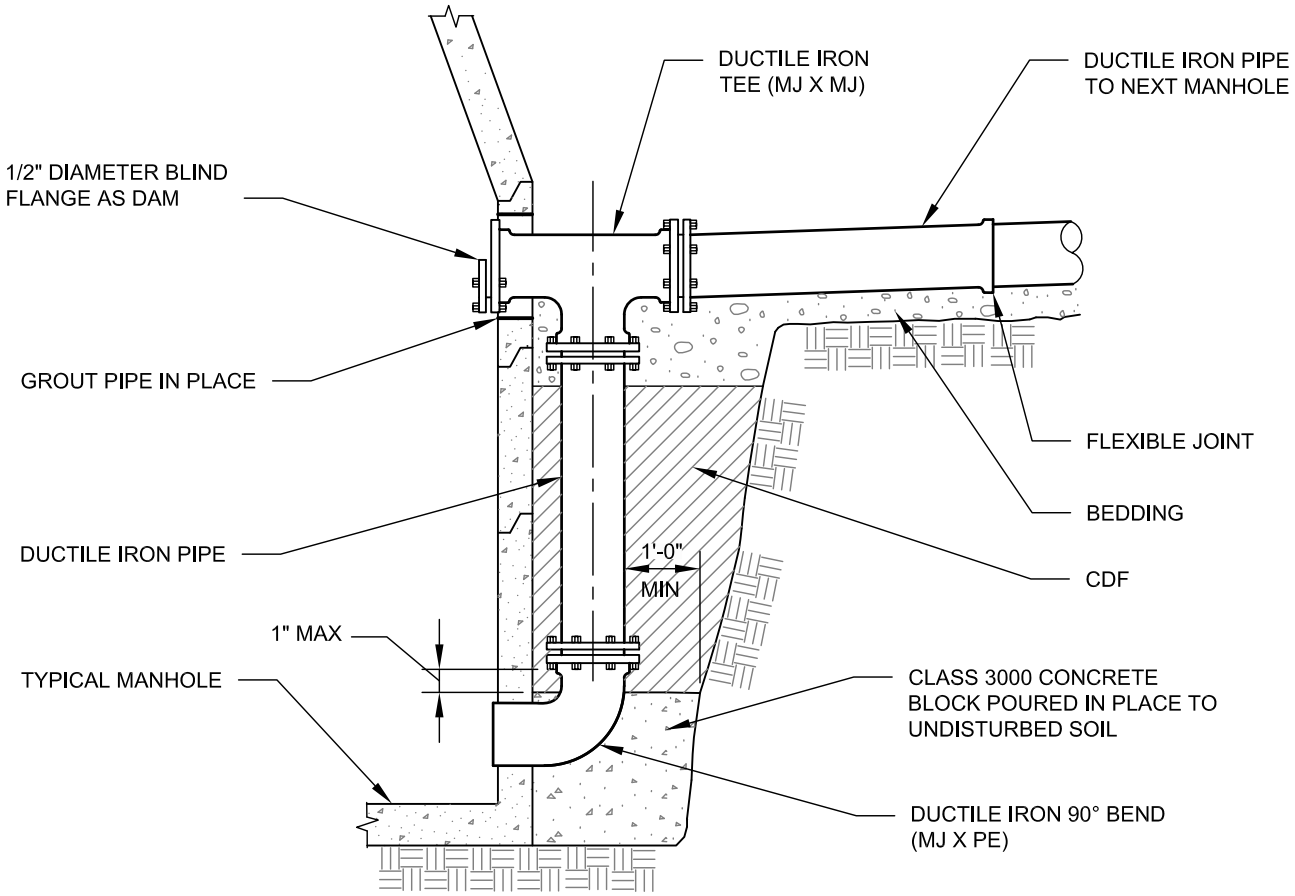

SECTION
NTS

NOTE:
FOR SIZE OF PIPE, REFER TO
CONSTRUCTION DRAWING.

APPROVED BY: SCOTT THOMASSON WATER/WASTEWATER ENGINEERING MANAGER	City of Redmond WASHINGTON	STANDARD DETAILS **DROP CONNECTION**
REVISION DATE: JULY 01, 2015		FILE NAME: SD820.DWG — DETAIL NUMBER: **820**

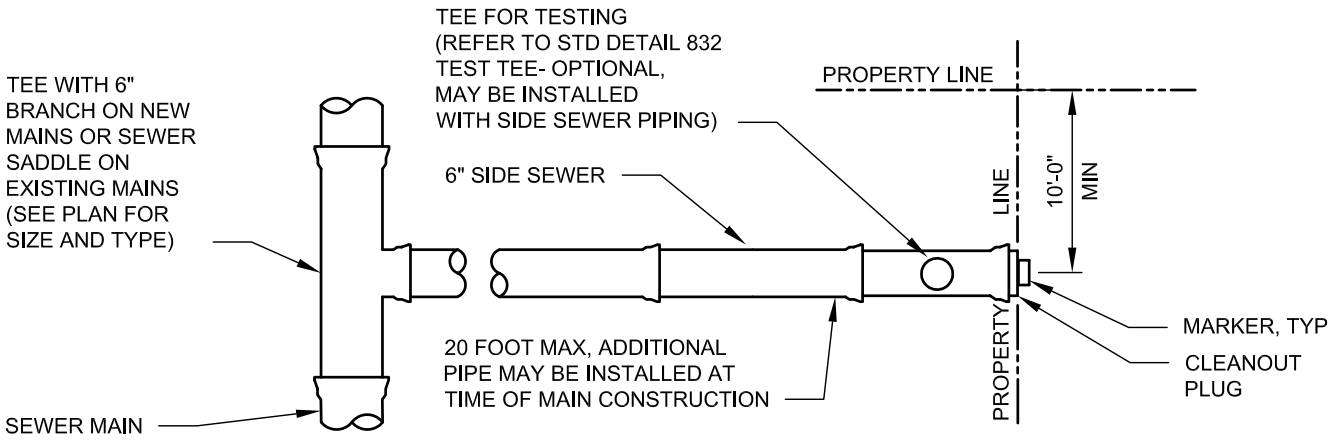

TYPICAL SINGLE SERVICE

NTS

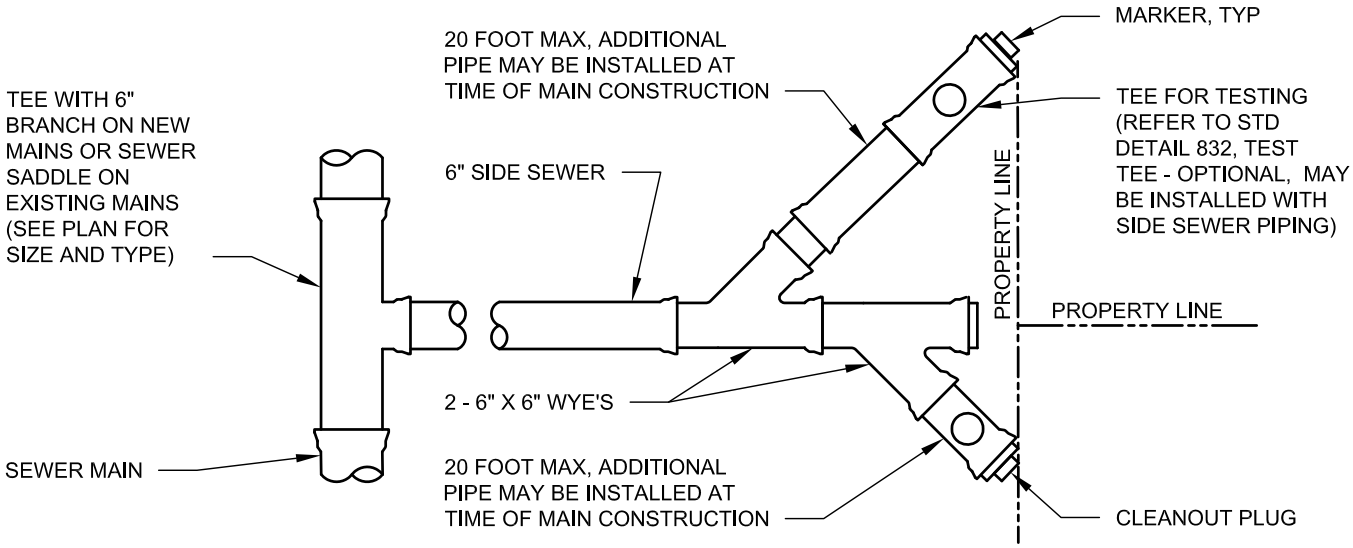

TYPICAL DOUBLE SERVICE

NTS

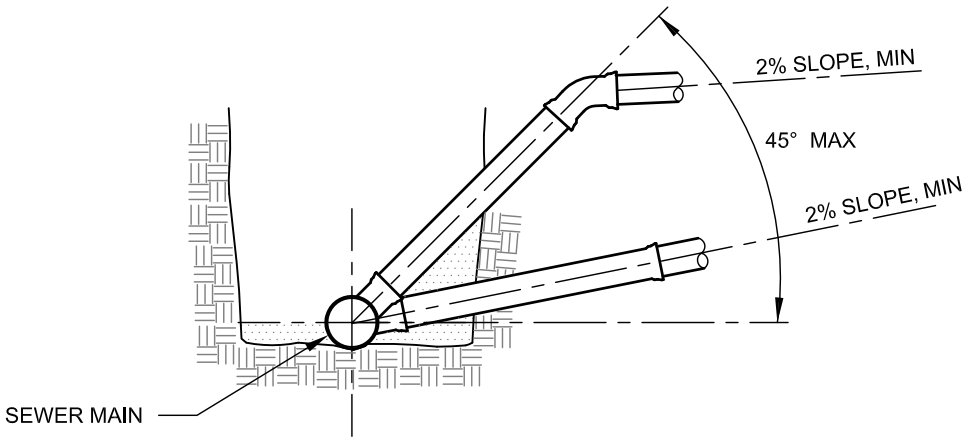

CONNECTION AT SEWER MAIN

NTS

APPROVED BY: SCOTT THOMASSON WATER/WASTEWATER ENGINEERING MANAGER	CityofRedmond WASHINGTON	STANDARD DETAILS **SIDE SEWER**
REVISION DATE: JULY 01, 2015		FILE NAME: SD830.DWG / DETAIL NUMBER: **830**

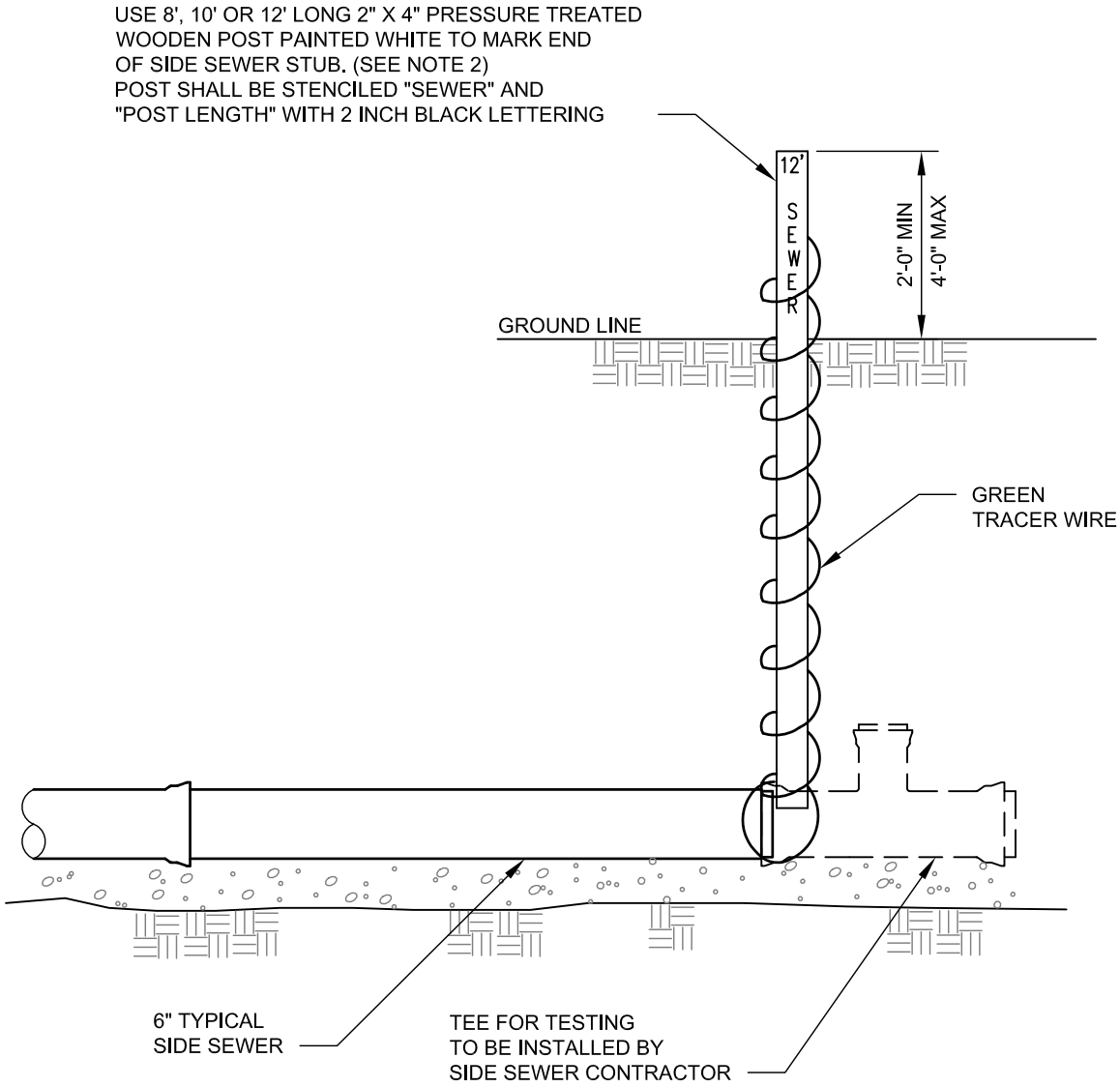

SIDE SEWER MARKER

NTS

NOTES:

1. DISTANCE TO SIDE SEWER STUB IS MEASURED FROM TOP OF POST TO INVERT OF PIPE.
2. FOR STUBS GREATER THAN 10 FEET DEEP, SPLICE PRESSURE TREATED 2"X 4" POSTS WITH A MINIMUM OF A 2 FOOT OVERLAP.

APPROVED BY: SCOTT THOMASSON WATER/WASTEWATER ENGINEERING MANAGER	CityofRedmond WASHINGTON	STANDARD DETAILS **SIDE SEWER MARKER**
REVISION DATE: JULY 01, 2015		FILE NAME: SD832.DWG / DETAIL NUMBER: **832**

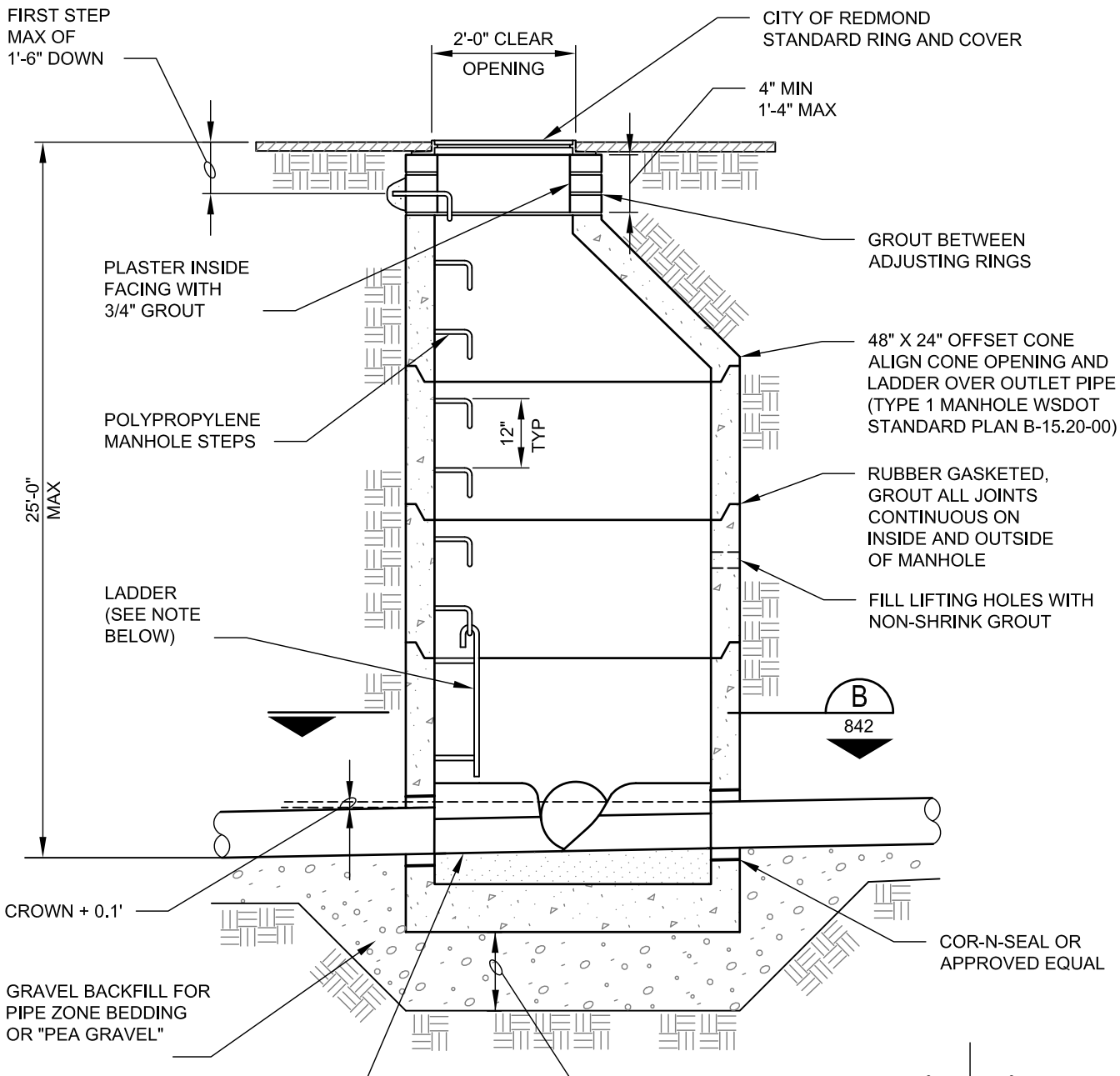

SECTION

NTS

USE 3/8" DIA SS
BOLTS TO SECURE
LADDER TO WALL

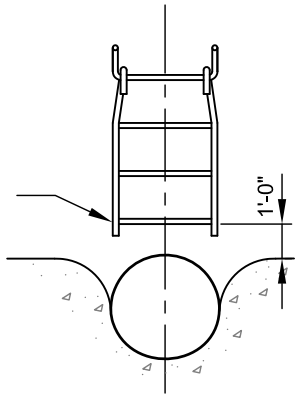

LADDER

NTS

APPROVED BY: SCOTT THOMASSON
WATER/WASTEWATER ENGINEERING MANAGER

REVISION DATE: JULY 01, 2015

CityofRedmond
WASHINGTON

STANDARD DETAILS

48" STANDARD SEWER MANHOLE

FILE NAME: SD840.DWG

DETAIL NUMBER: **840**

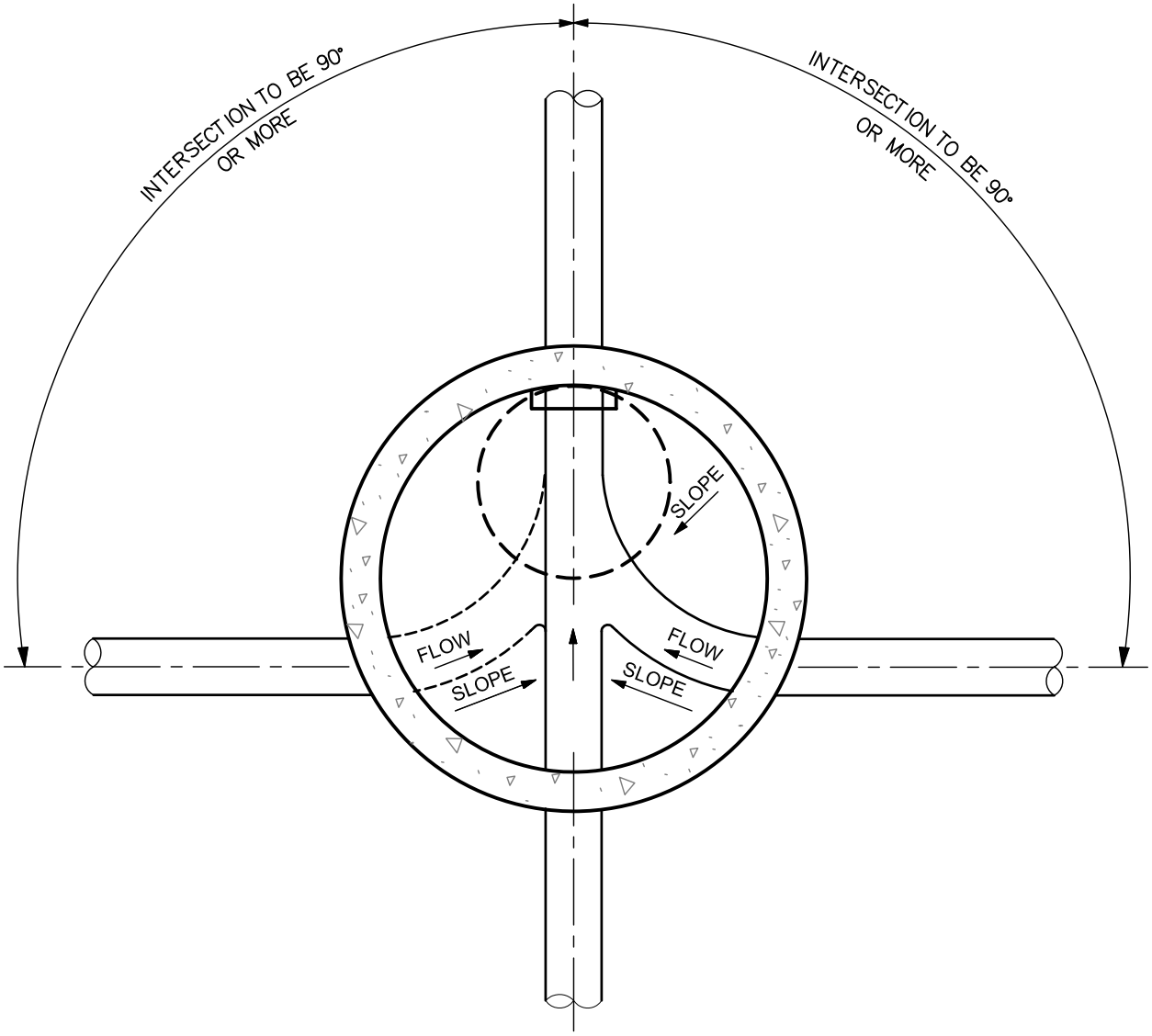

SECTION B
NTS 840

NOTES:

IN "TOP OF SYSTEM" MANHOLES WITH A 6 INCH LATERAL, PROVIDE CHANNELING TO THE UPSTREAM END OF MANHOLE. CHANNEL WIDTH SHALL BE EQUAL TO THE DOWNSTREAM SEWER MAIN DIAMETER.

APPROVED BY: SCOTT THOMASSON WATER/WASTEWATER ENGINEERING MANAGER	CityofRedmond WASHINGTON	STANDARD DETAILS **INTERSECTION OF SEWERS AT MANHOLE**
REVISION DATE: JULY 01, 2014		FILE NAME: SD842.DWG — DETAIL NUMBER: **842**

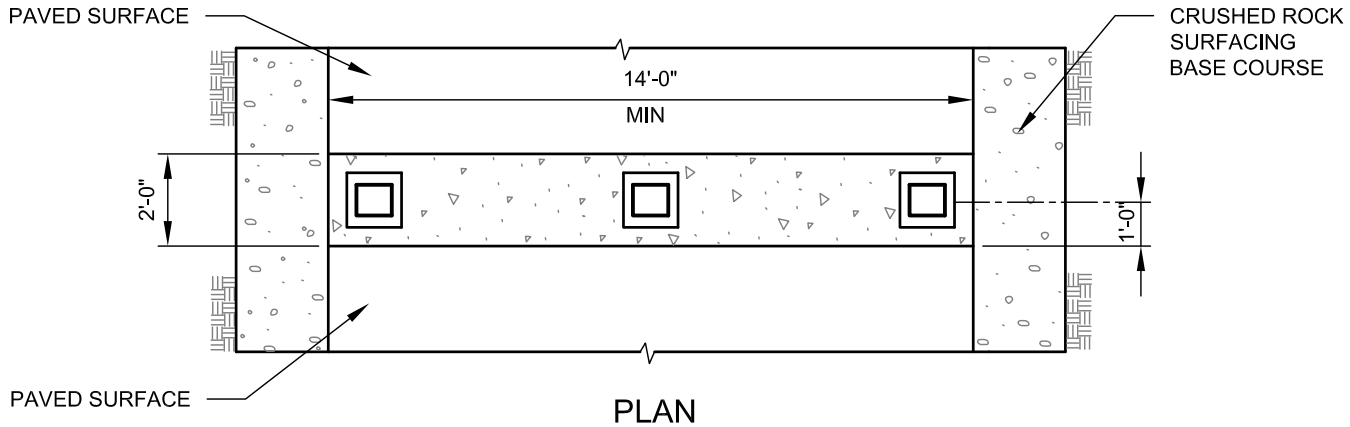

PLAN

NTS

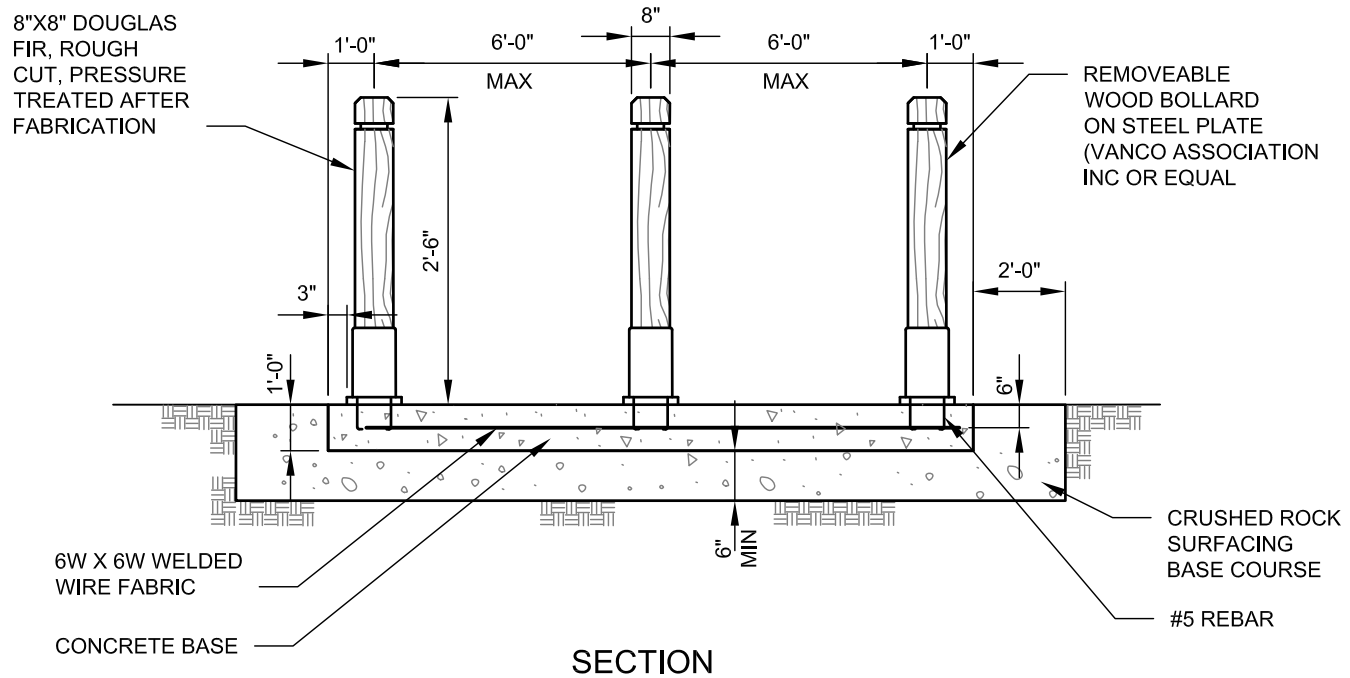

SECTION

NTS

NOTE:

IF ACCESS ROAD IS WIDER THAN 14 FEET, PROVIDE ADDITIONAL BOLLARDS AS NEEDED.

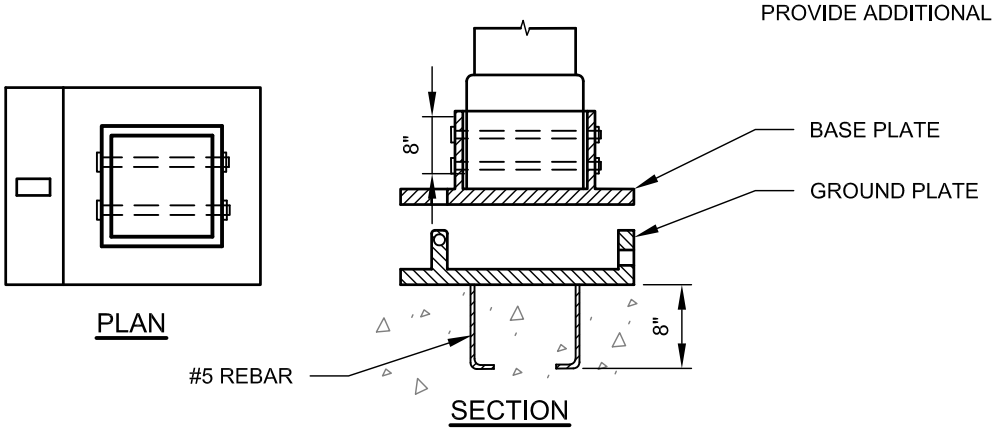

PLAN

SECTION

BOLLARD AND BASE PLATE

NTS

APPROVED BY: SCOTT THOMASSON
WATER/WASTEWATER ENGINEERING MANAGER

REVISION DATE: JULY 01, 2015

CityofRedmond WASHINGTON

STANDARD DETAILS

BOLLARD BARRIER FOR UTILITY ACCESS ROAD

FILE NAME: SD890.DWG

DETAIL NUMBER: **890**