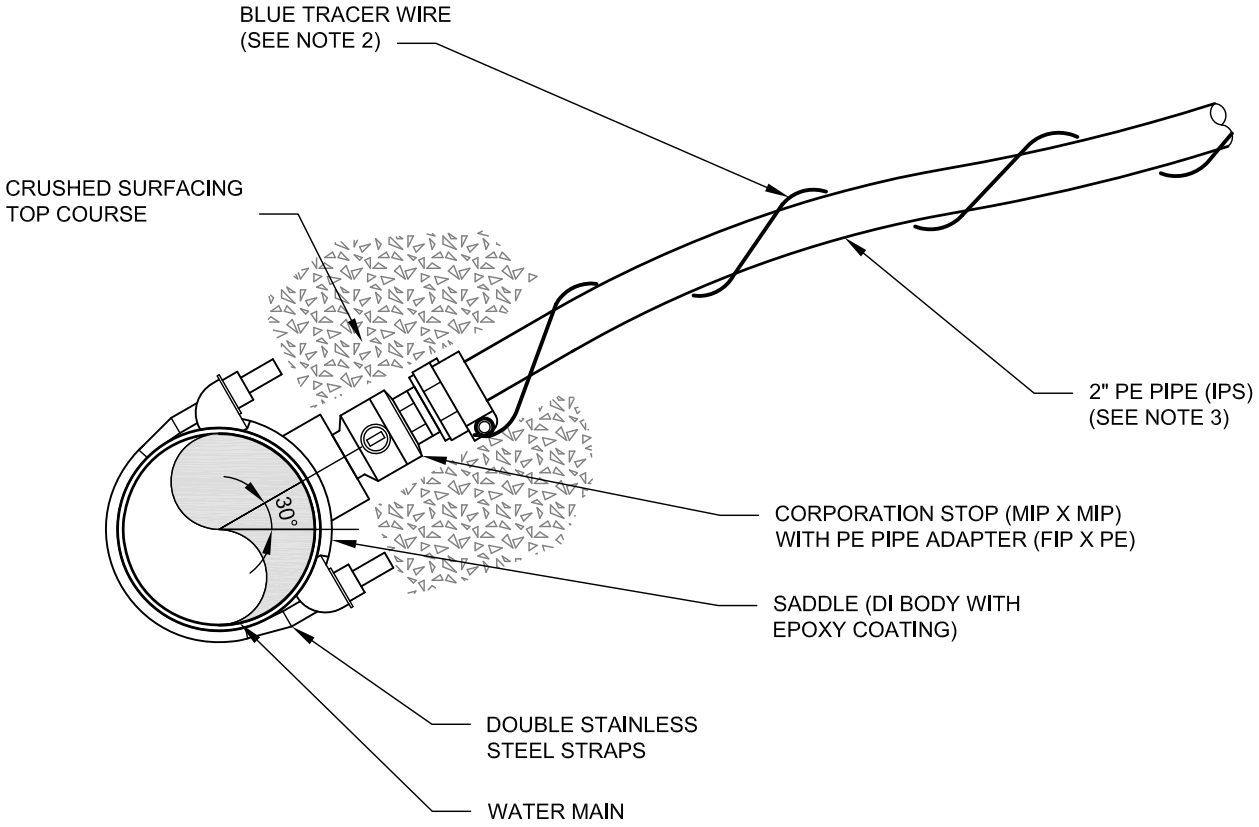

SECTION

NTS

IPS = IRON PIPE SIZE
FIP = FEMALE IRON PIPE THREAD
MIP = MALE IRON PIPE THREAD

NOTES:

1. CORPORATION STOP SERVICE CONNECTIONS SHALL ONLY BE USED FOR SINGLE SERVICES UP TO 2 INCH METER SETTERS AND DOUBLE SERVICES UP TO 1 INCH METER SETTERS. FOR TRIPLE MANIFOLDS, REFER TO STANDARD DETAIL 701B GATE VALVE SERVICE CONNECTIONS.
2. ATTACH 12 GAUGE TRACER WIRE TO WATER MAIN TO MAKE ELECTRICALLY CONTINUOUS.
3. SERVICE PIPE SHALL BE BURIED IN CRUSHED SURFACING TOP COURSE.
4. DIRECT TAPPING OF WATER MAIN IS NOT ALLOWED.

Scott Thomasson APPROVED BY: SCOTT THOMASSON WATER/WASTEWATER ENGINEERING MANAGER	CityofRedmond WASHINGTON	STANDARD DETAILS **CORPORATION STOP SERVICE CONNECTIONS**
REVISION DATE: JULY 01, 2015		FILE NAME: SD701A.DWG / DETAIL NUMBER: **701A**

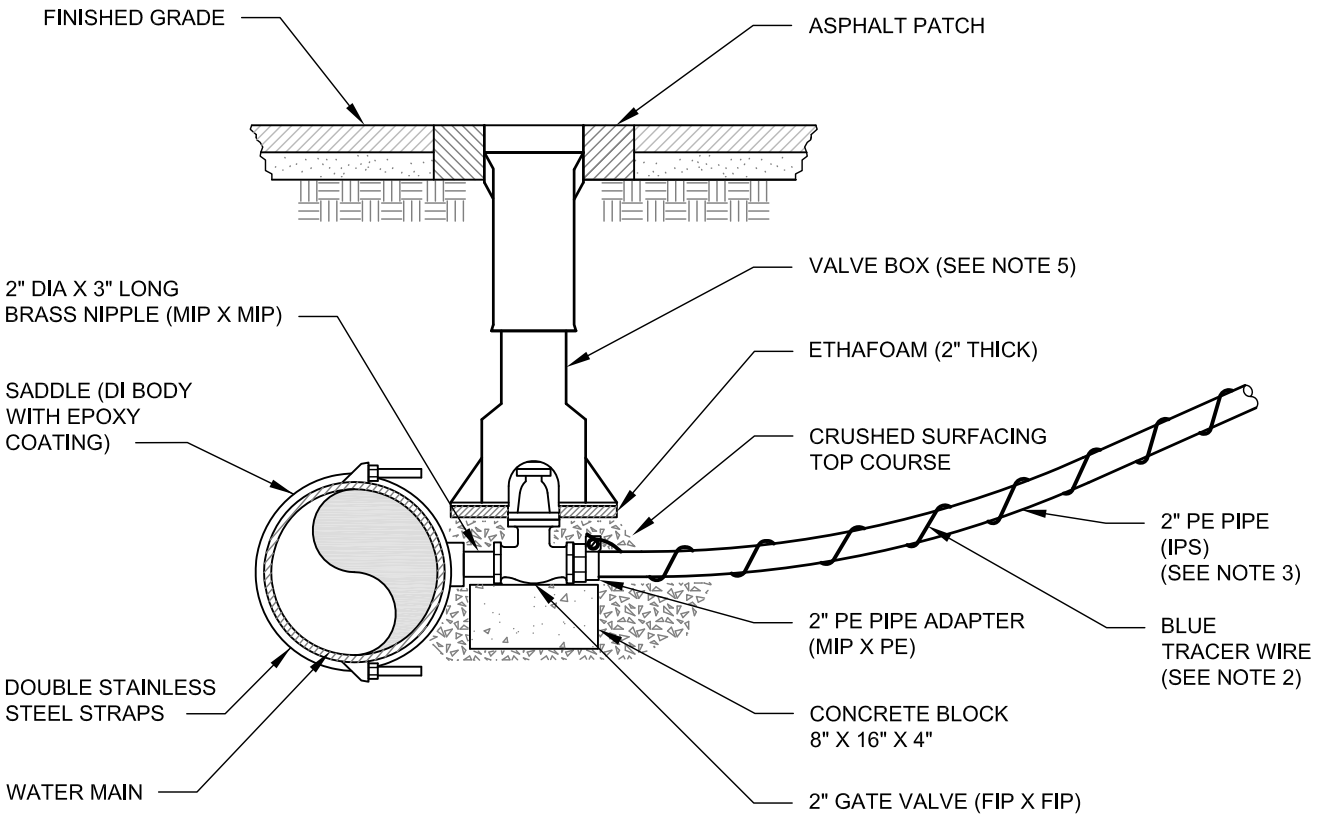

SECTION

NTS

IPS = IRON PIPE SIZE
FIP = FEMALE IRON PIPE THREAD
MIP = MALE IRON PIPE THREAD

NOTES:

1. GATE VALVE SERVICE CONNECTION SHALL ONLY BE USED FOR TRIPLE SERVICE MANIFOLDS OR LARGER. FOR SINGLE AND DOUBLE SERVICES, REFER TO STANDARD DETAIL 701A CORPORATION STOP SERVICE CONNECTIONS.
2. ATTACH 12 GAUGE TRACER WIRE TO WATER MAIN TO MAKE ELECTRICALLY CONTINUOUS.
3. SERVICE PIPE SHALL BE BURIED IN CRUSHED SURFACING TOP COURSE.
4. VALVE BOX LIDS SHALL BE INSTALLED FLUSH WITH FINISHED GRADE. RAISE LIDS AFTER PAVING TO FINAL GRADE. SEE STANDARD DETAIL 718 FOR VALVE BOX DETAIL.
5. DIRECT TAPPING OF WATER MAIN IS NOT ALLOWED.

APPROVED BY: SCOTT THOMASSON WATER/WASTEWATER ENGINEERING MANAGER	CityofRedmond WASHINGTON	STANDARD DETAILS **GATE VALVE SERVICE CONNECTION**
REVISION DATE: JULY 01, 2015		FILE NAME: SD701B.DWG — DETAIL NUMBER: **701B**

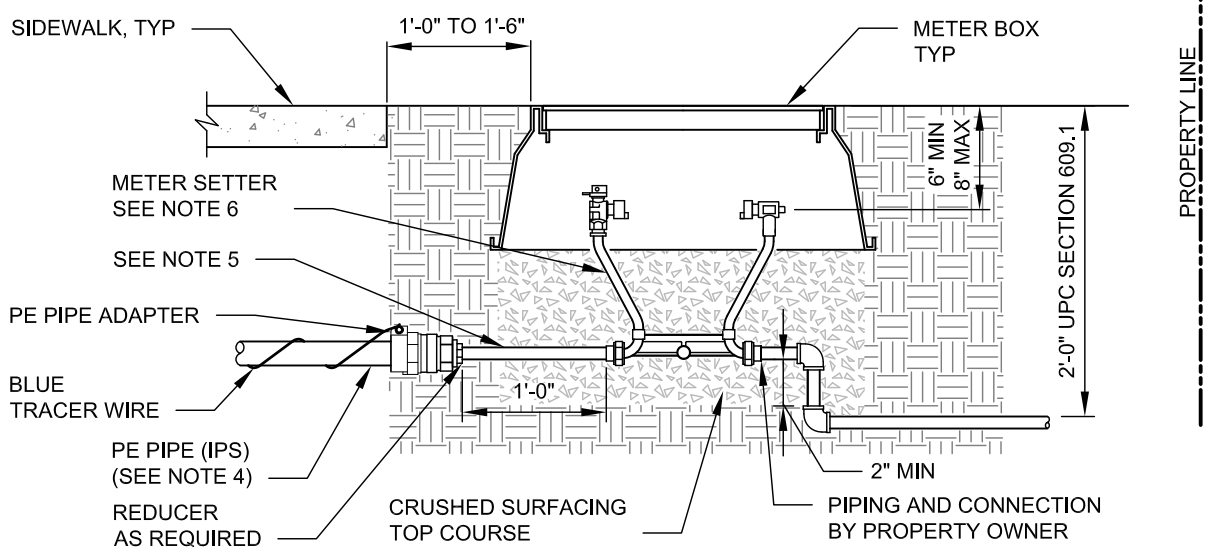

5/8" X 3/4" AND 1" WATER METER

NTS

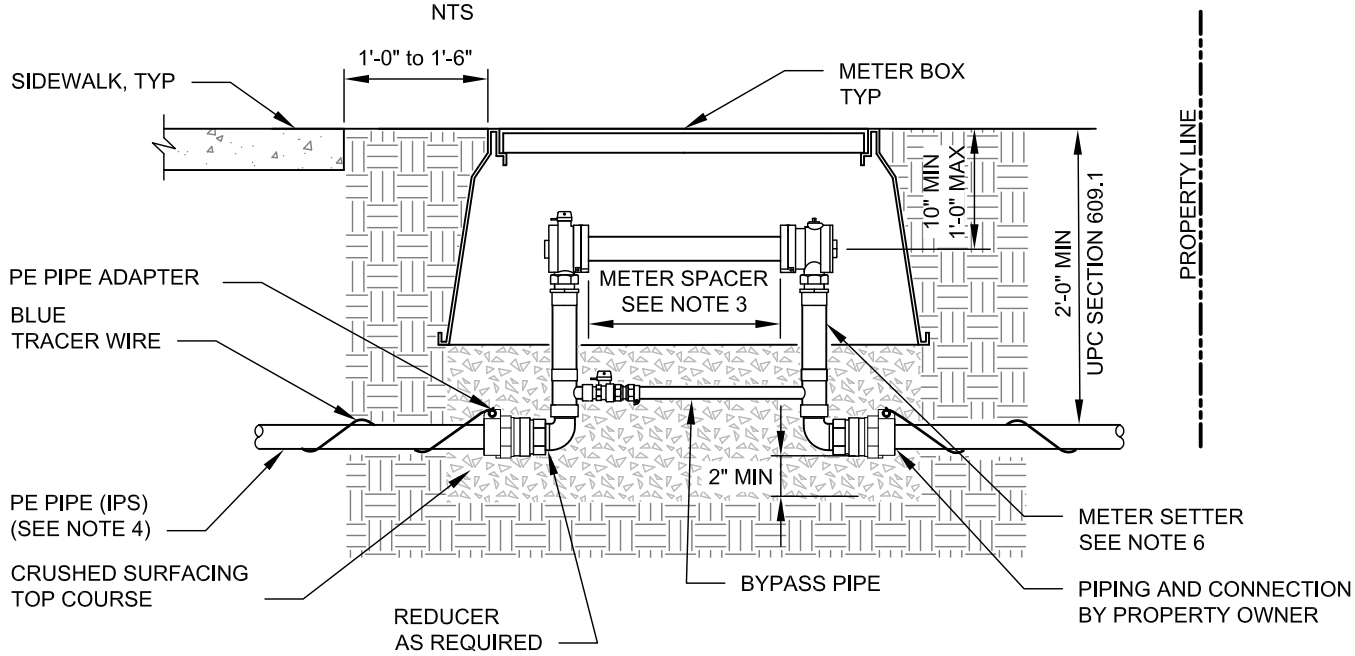

1- 1/2" AND 2" WATER METER

NTS

NOTES:

1. SEE STANDARD DETAIL 701A, 701B, 703, 703A, 703B AND 703C FOR ADDITIONAL DETAILS.
2. SET METER BOX FLUSH WITH SIDEWALK OR CURB ELEVATION IF LOCATED IN LAWN AREA. SET METER BOX 2 INCHES ABOVE FINISHED GRADE IF LOCATED IN NON-LAWN AREA.
3. SPACER FOR A 1- 1/2 INCH METER IS 13- 1/4 INCHES IN LENGTH. SPACER FOR A 2 INCH METER IS 17- 1/4 INCHES IN LENGTH. SPACER PROVIDED BY CONTRACTOR.
4. SERVICE CONNECTION PIPE SIZE SHALL BE 2 INCH DIAMETER.
5. FOR 5/8 INCH X 3/4 INCH OR 1 INCH METER SETTERS, INSTALL A 1 FOOT LONG BRASS NIPPLE BETWEEN THE REDUCER AND THE METER SETTER. DIA SIZE TO MATCH METER SETTER SIZE.
6. 1- 1/2 INCH AND 2 INCH METER SETTERS MAY BE HORIZONTAL OR VERTICAL INLETS AND OUTLETS.
7. ALL FITTINGS SHALL BE BRASS.
8. TOUCHREAD PAD HOLE TO BE DRILLED BY CITY.

Scott Thomasson APPROVED BY: SCOTT THOMASSON WATER/WASTEWATER ENGINEERING MANAGER	CityofRedmond WASHINGTON	STANDARD DETAILS **5/8" X 3/4" TO 2"** **METER SETTER DETAILS**
REVISION DATE: JULY 01, 2015		FILE NAME: SD702.DWG / DETAIL NUMBER: **702**

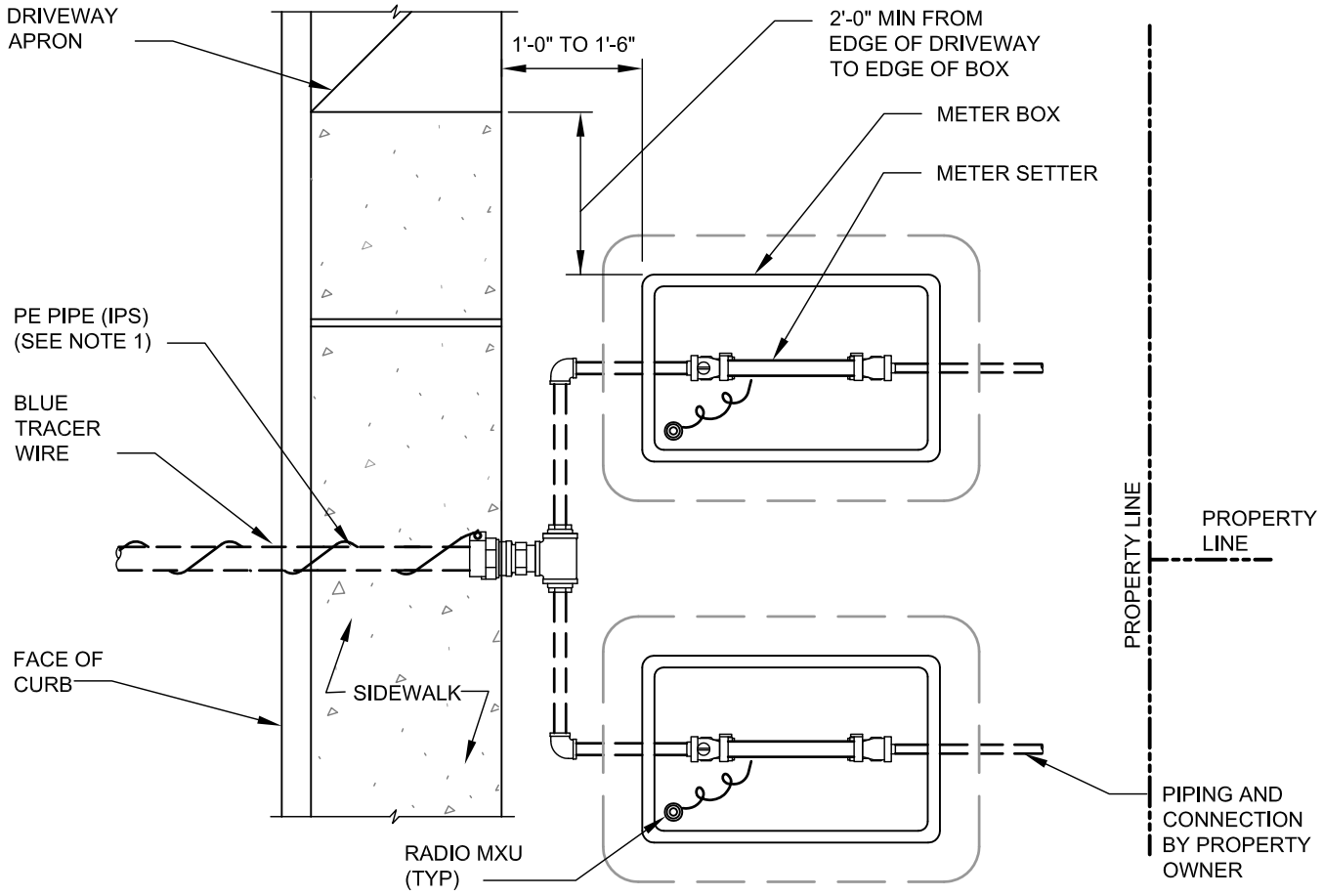

DOUBLE SERVICE

NTS

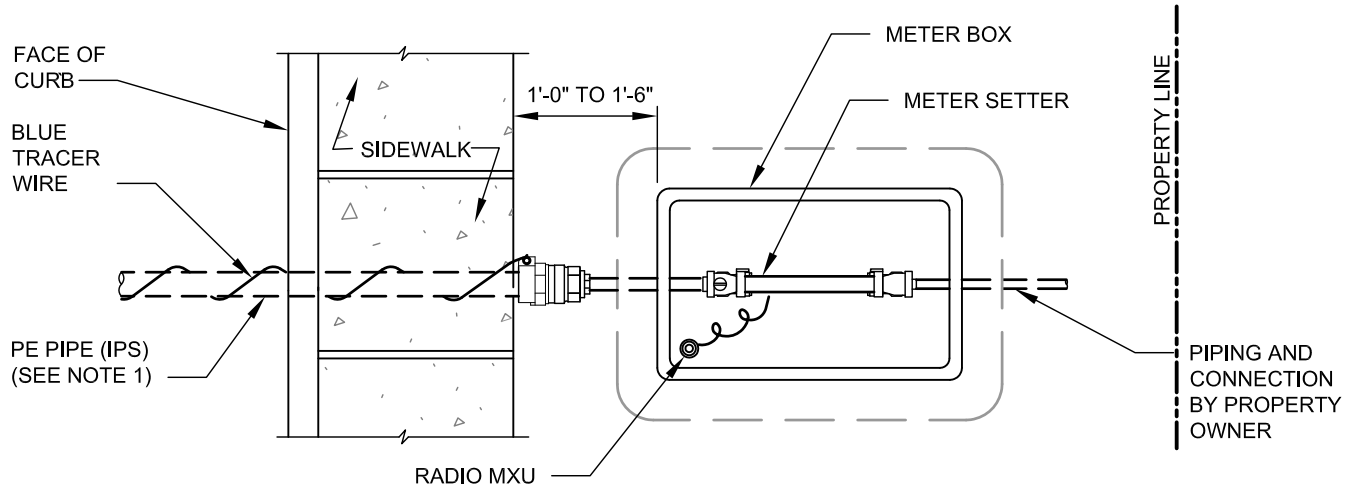

SINGLE SERVICE

NTS

NOTES:

1. SERVICE CONNECTION PIPE SIZE SHALL BE 2 INCH DIAMETER.
2. SEE STANDARD DETAILS 701A, 701B, 702, 703A,703B AND 703C FOR ADDITIONAL DETAILS.
3. SEE STANDARD DETAIL 703C FOR TYPICAL PLACEMENT IN PLANTER STRIP.

APPROVED BY: SCOTT THOMASSON WATER/WASTEWATER ENGINEERING MANAGER	CityofRedmond WASHINGTON	STANDARD DETAILS **STANDARD METER LOCATIONS 5/8" X 3/4" TO 2" METERS**
REVISION DATE: JULY 01, 2015		FILE NAME: SD703.DWG / DETAIL NUMBER: **703**

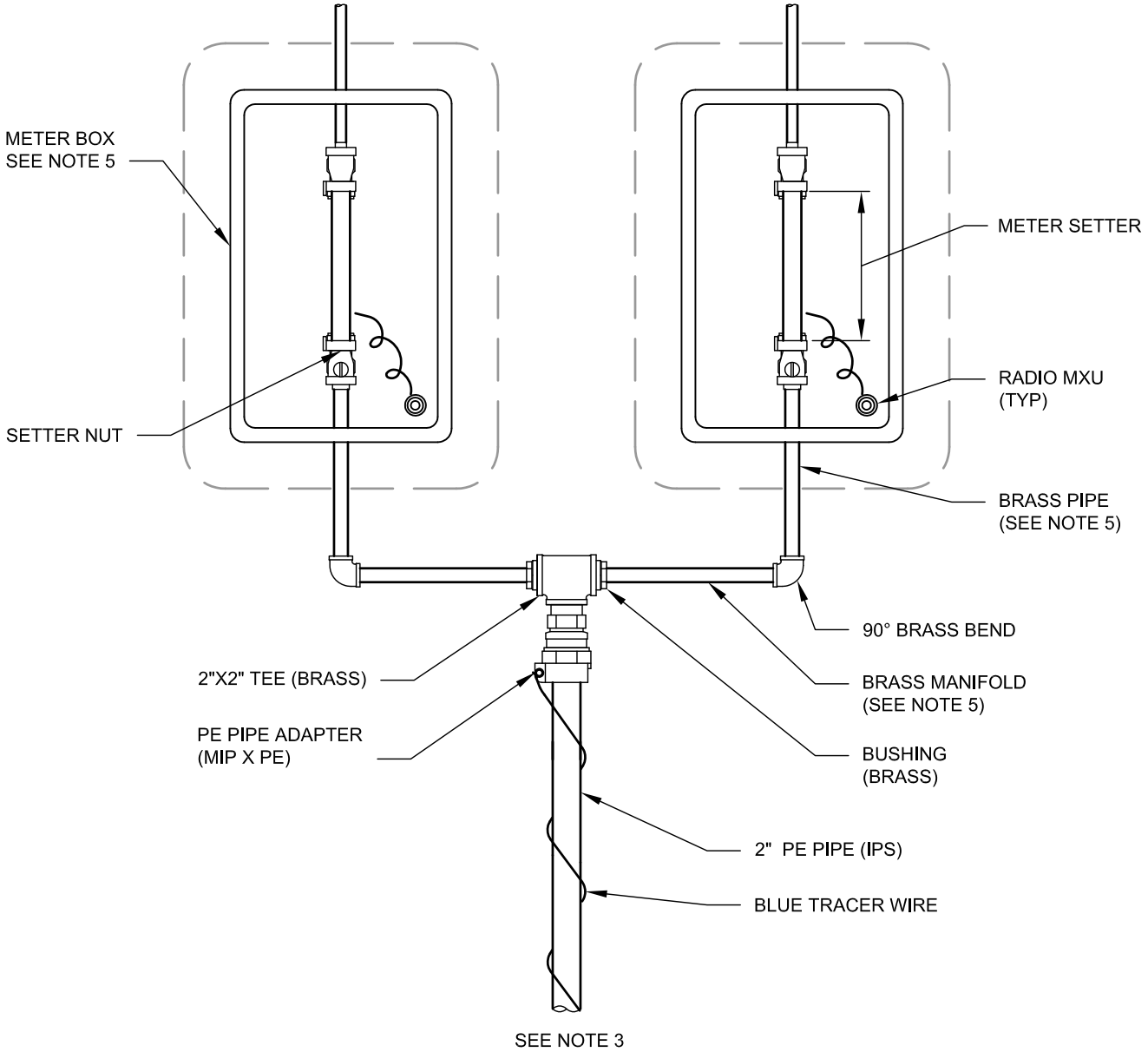

PLAN

NTS

NOTES:

1. ALL METERS SHALL BE INSTALLED IN LANDSCAPE AREAS.
2. DOUBLE SERVICE MANIFOLD SHALL BE USED FOR THE FOLLOWING USES:
   A. ALL 5/8 INCH X 3/4 INCH AND 1 INCH METERS
   B. 1- 1/2 INCH SINGLE FAMILY RESIDENTIAL DUAL PURPOSE (DOMESTIC AND FIRE) METERS.
3. USE CORPORATION STOP CONNECTION. SEE STANDARD DETAIL 701A.
4. CENTER METER BOX OVER METER SETTER ASSEMBLY AS SHOWN.
5.

METER SETTER	BRASS MANIFOLD		BRASS BEND	BRASS PIPE		BOX SIZE
	DIA	LENGTH		DIA	LENGTH	
5/8" X 3/4"	3/4"	12"	3/4"	3/4"	12"	13" X 24"
1"	1"	12"	1"	1"	12"	13" X 24"
1 1/2"	1 1/2"	12"	1 1/2"	1 1/2"	12"	17" X 30"

APPROVED BY: SCOTT THOMASSON
WATER/WASTEWATER ENGINEERING MANAGER

REVISION DATE: JULY 01, 2015

CityofRedmond WASHINGTON

STANDARD DETAILS

DOUBLE SERVICE MANIFOLD

FILE NAME: SD703A.DWG

DETAIL NUMBER: **703A**

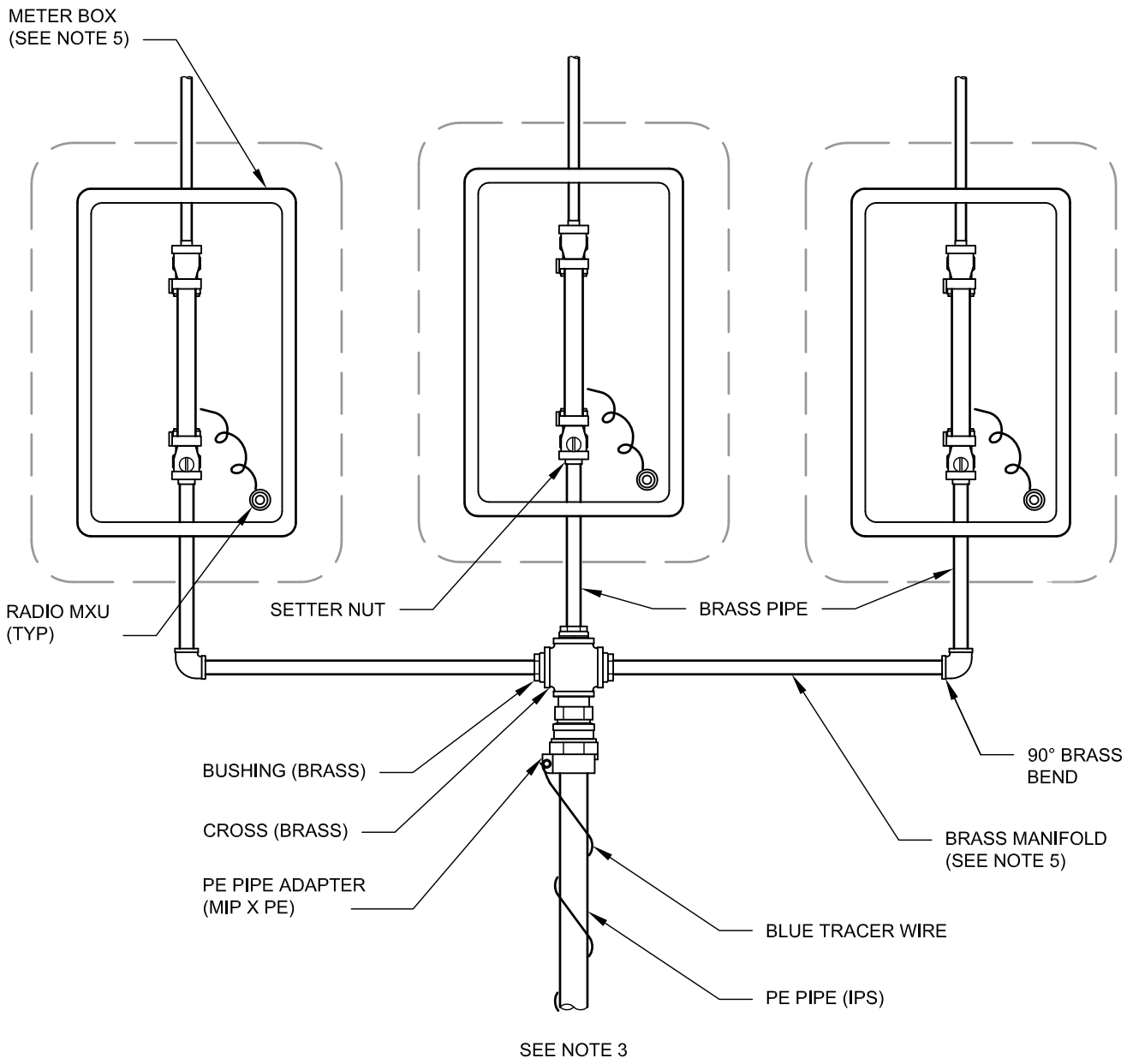

PLAN

NTS

NOTES:

1. ALL METERS SHALL BE INSTALLED IN LANDSCAPE AREAS.
2. TRIPLE SERVICE MANIFOLD SHALL BE USED FOR THE FOLLOWING USES:
   A. ALL 5/8 INCH X 3/4 INCH AND 1 INCH METERS
   B. 1- 1/2 INCH SINGLE FAMILY RESIDENTIAL DUAL PURPOSE (DOMESTIC AND FIRE) METERS.
3. USE GATE VALVE CONNECTION. SEE STANDARD DETAIL 701B.
4. CENTER METER BOX OVER METER SETTER ASSEMBLY AS SHOWN.
5.

METER SETTER	BRASS MANIFOLD		BRASS BEND	BRASS PIPE		BOX SIZE
	DIA	LENGTH		DIA	LENGTH	
5/8" X 3/4"	3/4"	24"	3/4"	3/4"	12"	13" X 24"
1"	1"	24"	1"	1"	12"	13" X 24"
1 1/2"	1 1/2"	24"	1 1/2"	1 1/2"	12"	17" X 30"

APPROVED BY: SCOTT THOMASSON
WATER/WASTEWATER ENGINEERING MANAGER

REVISION DATE: JULY 01, 2015

CityofRedmond WASHINGTON

STANDARD DETAILS

TRIPLE SERVICE MANIFOLD

FILE NAME: SD703B.DWG

DETAIL NUMBER: **703B**

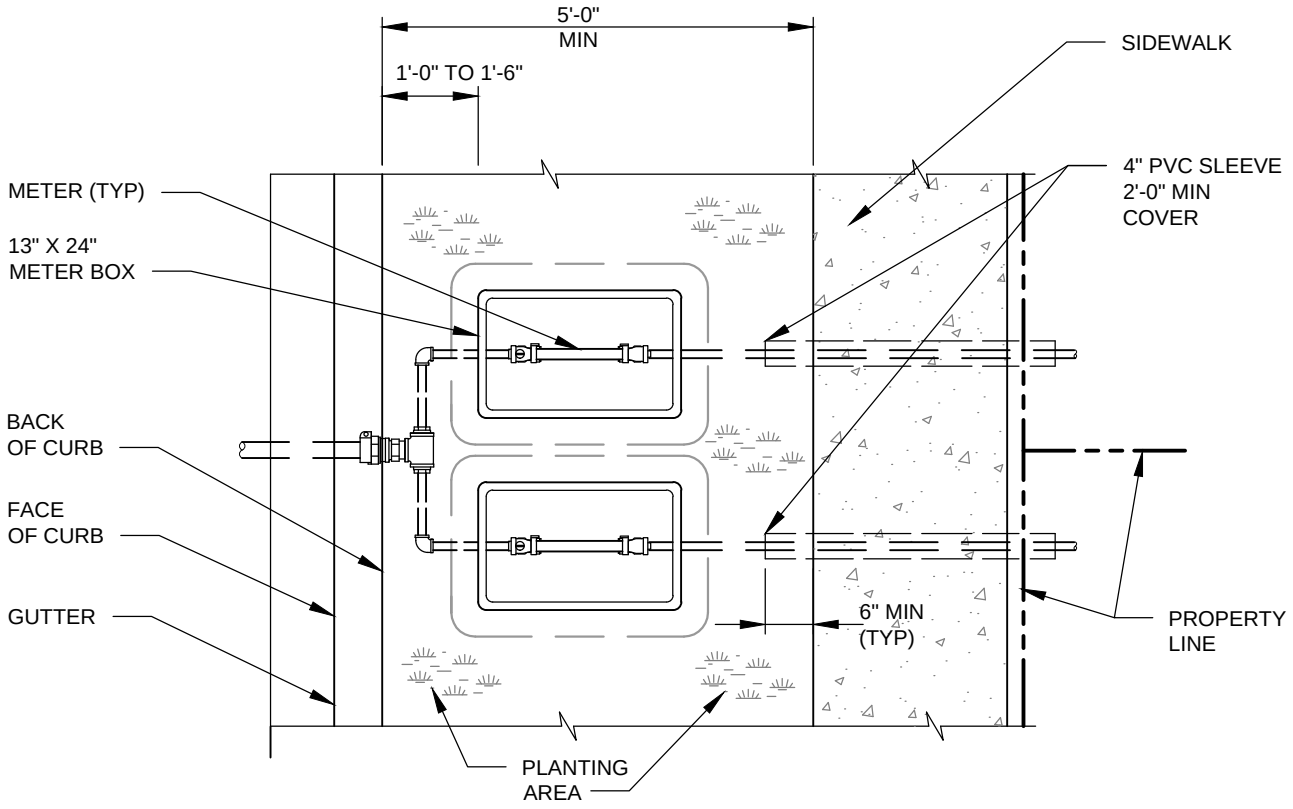

METER BOXES

NTS

NOTES:

1. SERVICE CONNECTION PIPE SIZE SHALL BE 2 INCH DIAMETER.
2. SEE STANDARD DETAILS 701A, 701B, 702, 703A AND 703B FOR ADDITIONAL DETAILS.

APPROVED BY: SCOTT THOMASSON
WATER/WASTEWATER ENGINEERING MANAGER

REVISION DATE: JULY 01, 2015

CityofRedmond WASHINGTON

STANDARD DETAILS

METER BOX LOCATION
WITHIN PLANTING AREA

FILE NAME: SD703C.DWG | DETAIL NUMBER: 703C

Xref G:\Pw\Standard Details\2011\CAD Resource\Block Library\8.5x11 Redmond BorderBlackLOGO.dwg

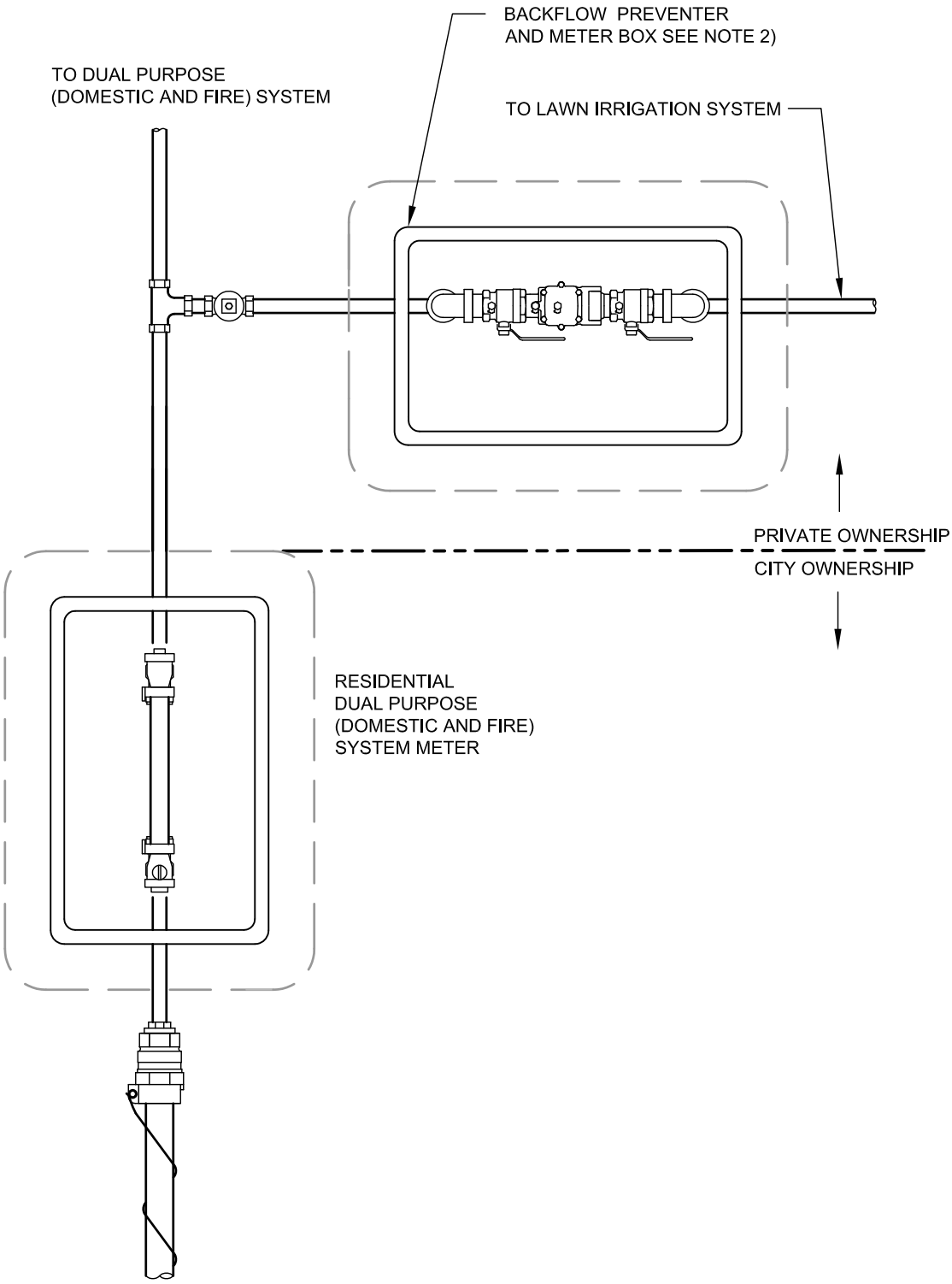

SINGLE METER

NTS

NOTES:

1. SEE STANDARD DETAILS 701A, 702, AND 703 FOR ADDITIONAL DETAILS.
2. SEE STANDARD DETAIL 711 FOR ADDITIONAL INFORMATION ON BACKFLOW PREVENTERS (BFP).

APPROVED BY: SCOTT THOMASSON WATER/WASTEWATER ENGINEERING MANAGER	CityofRedmond WASHINGTON	STANDARD DETAILS **RESIDENTIAL FIRE SPRINKLER DETAILS**
REVISION DATE: JULY 01, 2015		FILE NAME: SD704.DWG — DETAIL NUMBER: **704**

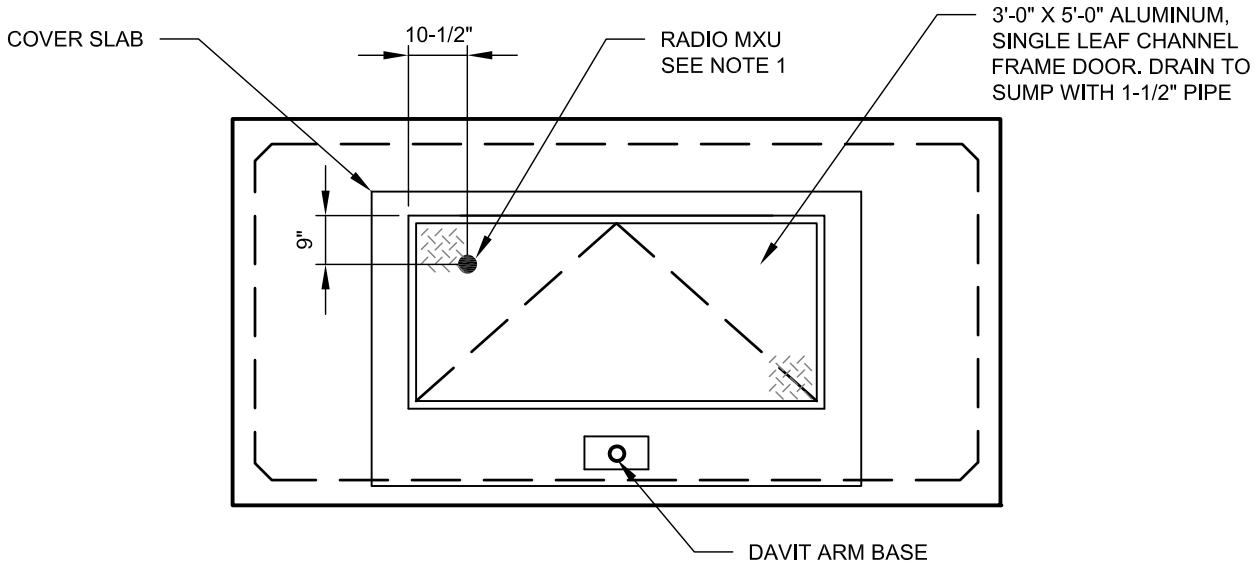

PLAN VIEW WITH COVER SLAB

NTS

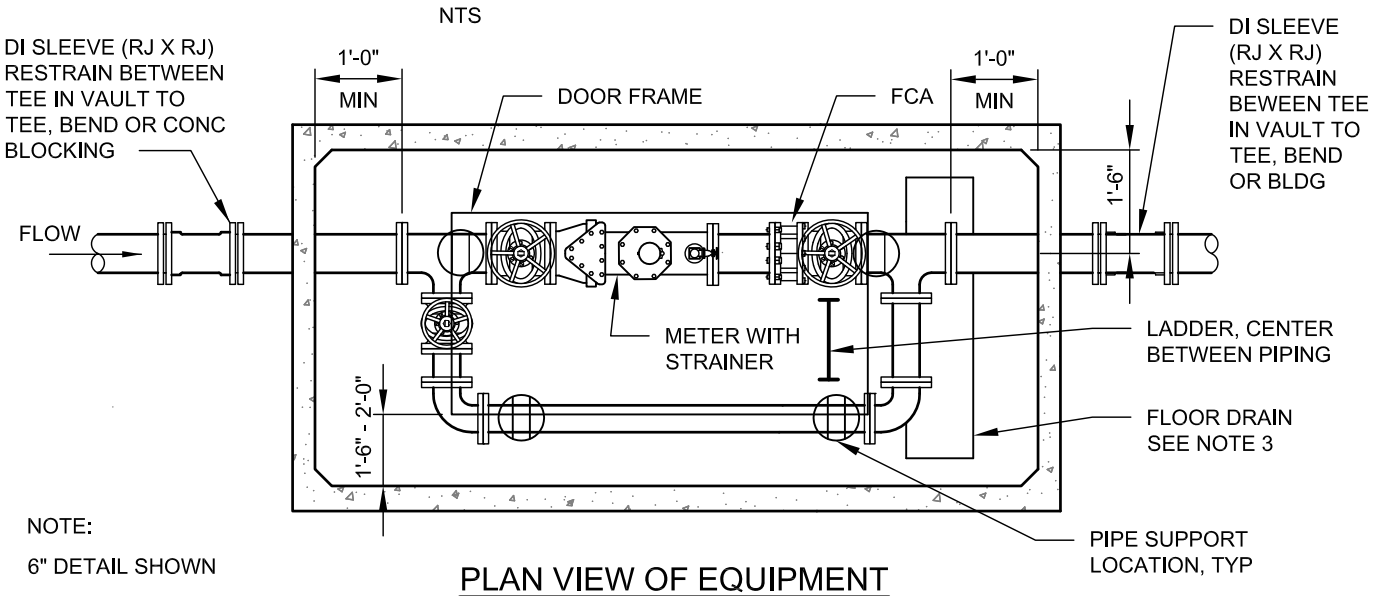

NOTE:

6" DETAIL SHOWN

PLAN VIEW OF EQUIPMENT

NTS

VAULT, FITTINGS AND PIPING SIZING REQUIREMENTS						UTILITY VAULT NO. *
METER SIZE	BYPASS VALVES AND PIPING	BYPASS TEE (FL X FL)	MIN INSIDE VAULT DIM LEN	WIDTH	HT	
3"	3"	3" X 3"	10 FT	6 FT	6 FT	810 - LA
4"	4"	4" X 4"	10 FT	6 FT	6 FT	810 - LA
6"	4"	6" X 4"	12 FT	6 FT	6 FT	810 - LA

* OR APPROVED EQUAL

NOTES:

1. VAULT ACCESS HATCH SHALL BE DRILLED FOR INSTALLATION OF RADIO MXU.
2. METER SHALL BE OBTAINED BY THE CONTRACTOR FROM THE SUPPLIER AND DELIVERED TO CITY MAINTENANCE OPERATIONS CENTER FOR STORAGE UNTIL INSTALLATION. WHEN METER APPLICATION IS APPROVED FOR INSTALLATION, INCLUDING PAYMENT OF CONNECTION FEES, THE CONTRACTOR SHALL RETRIEVE AND INSTALL METER.
3. A GRAVITY VAULT DRAIN (DI) SHALL BE CONNECTED TO STORM SYSTEM AS SHOWN ON THE DRAWINGS.
4. PAINT ALL EXPOSED PIPING AND FITTINGS INSIDE VAULT, EXCEPT METER BODY.
5. CENTER PIPING UNDER HATCH OPENING.

Scott Thomasson

APPROVED BY: SCOTT THOMASSON
WATER/WASTEWATER ENGINEERING MANAGER

REVISION DATE: JULY 01, 2015

CityofRedmond WASHINGTON

STANDARD DETAILS

WATER METER PLAN VIEW
3", 4", 6" METER DETAILS

FILE NAME: SD705.DWG

DETAIL NUMBER: **705**

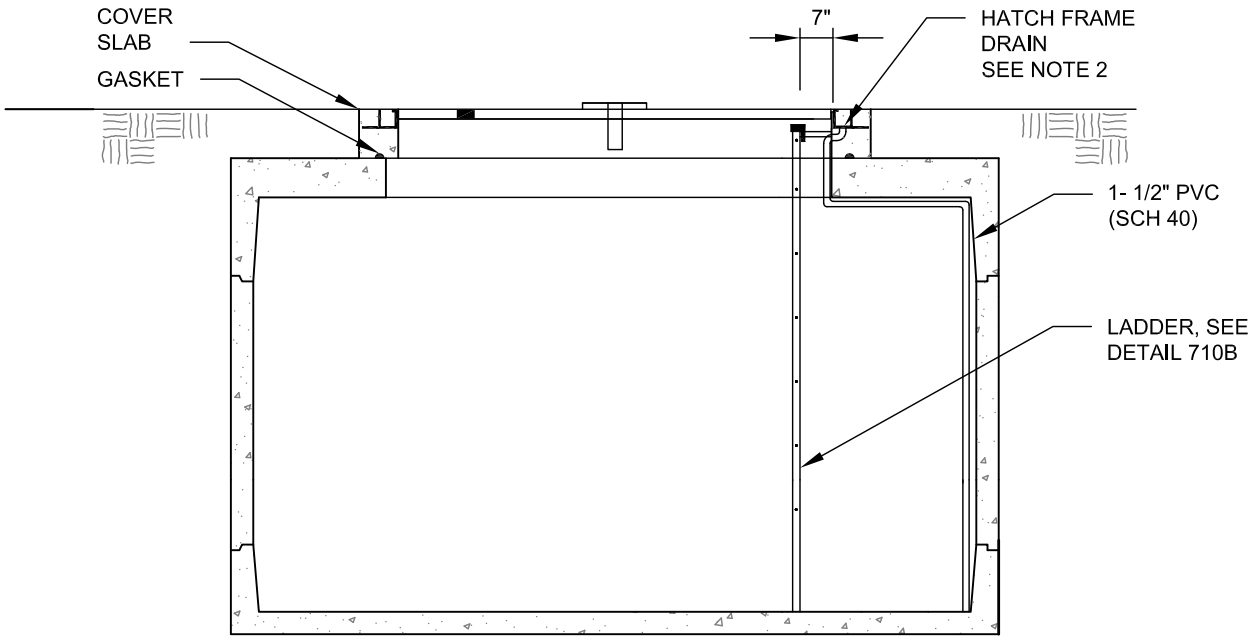

SECTION WITH COVER SLAB

NTS

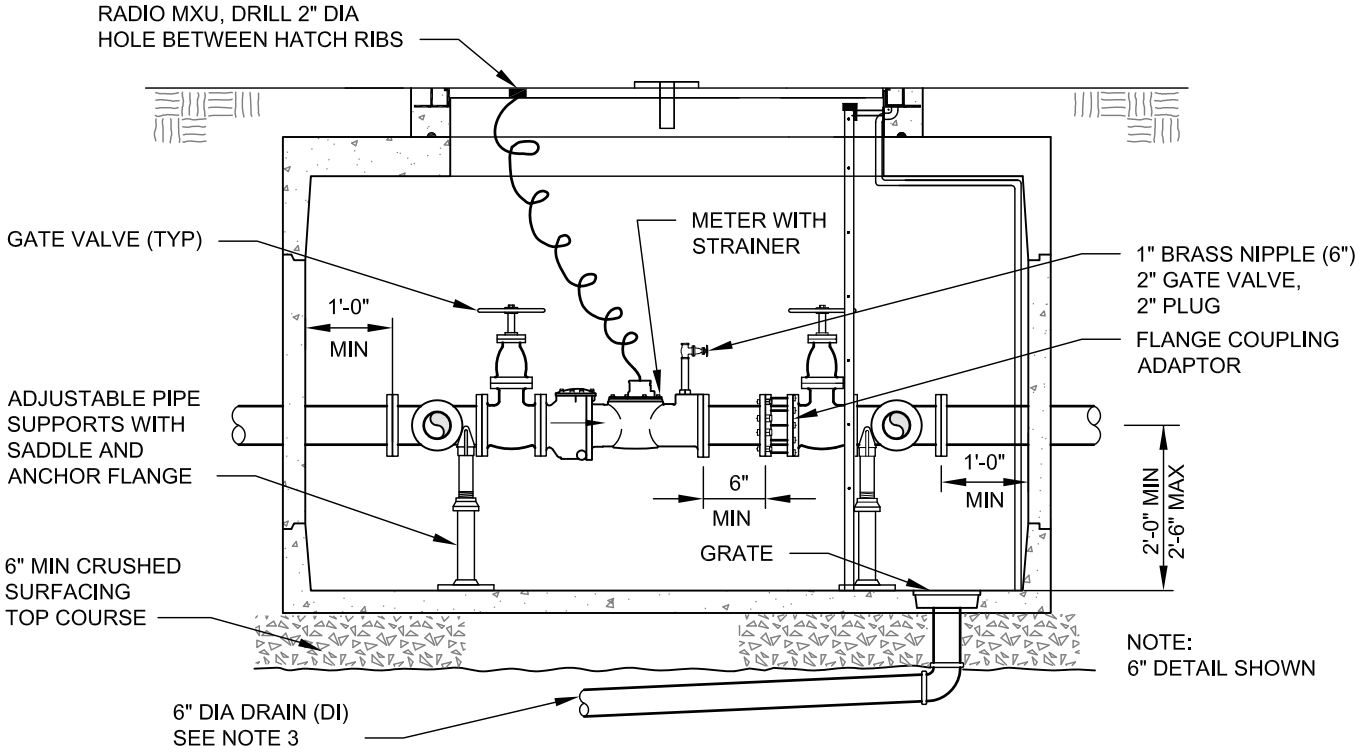

SECTION OF EQUIPMENT

NTS

NOTES:

1. SET COVER SLAB FLUSH WITH SIDEWALK OR CURB ELEVATION IF LOCATED IN LAWN AREA. SET COVER SLAB APPROXIMATELY 2 INCHES ABOVE FINISHED GRADE IF LOCATED IN LANDSCAPING AREA.

2. HATCH FRAME DRAIN CAST IN CONCRETE SHALL BE 1 -1/2 INCH BRASS. REMAINDER OF HATCH FRAME DRAIN SHALL BE 1 - 1/2 INCH SCH 40 PVC IN VAULT. USE 45° BENDS WHERE POSSIBLE AND PROVIDE UNIONS TO ALLOW DISASSEMBLY OF PIPING. ATTACH TO VAULT WITH STAINLESS STEEL HARDWARE.

3. A GRAVITY VAULT DRAIN (DI) SHALL BE CONNECTED TO STORM SYSTEM AS SHOWN ON THE DRAWINGS.

Scott Thomasson APPROVED BY: SCOTT THOMASSON WATER/WASTEWATER ENGINEERING MANAGER	CityofRedmond WASHINGTON	STANDARD DETAILS **WATER METER SECTIONS** **3", 4", 6" METER DETAILS**
REVISION DATE: JULY 01, 2015		FILE NAME: SD705A.DWG / DETAIL NUMBER: **705A**

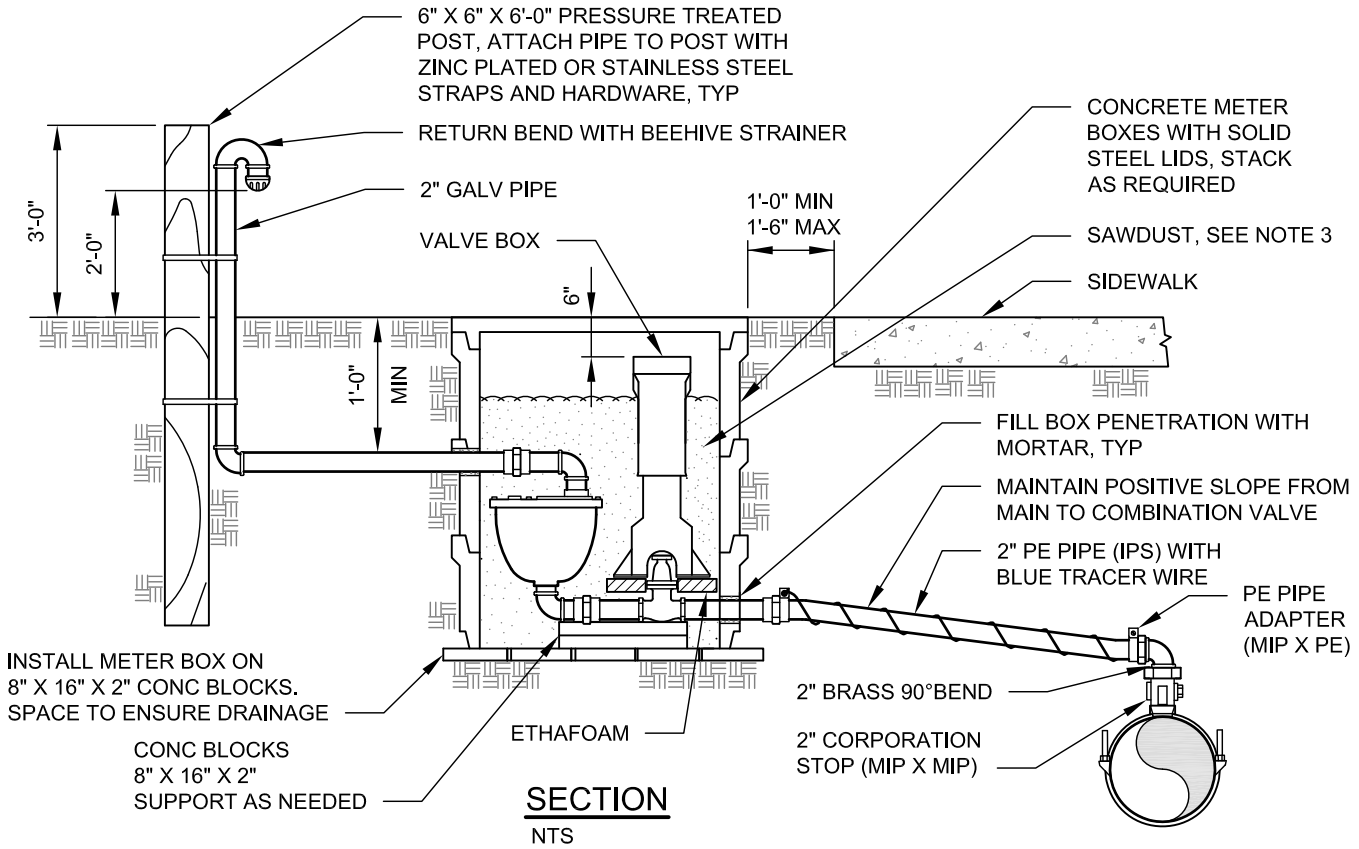

SECTION

NTS

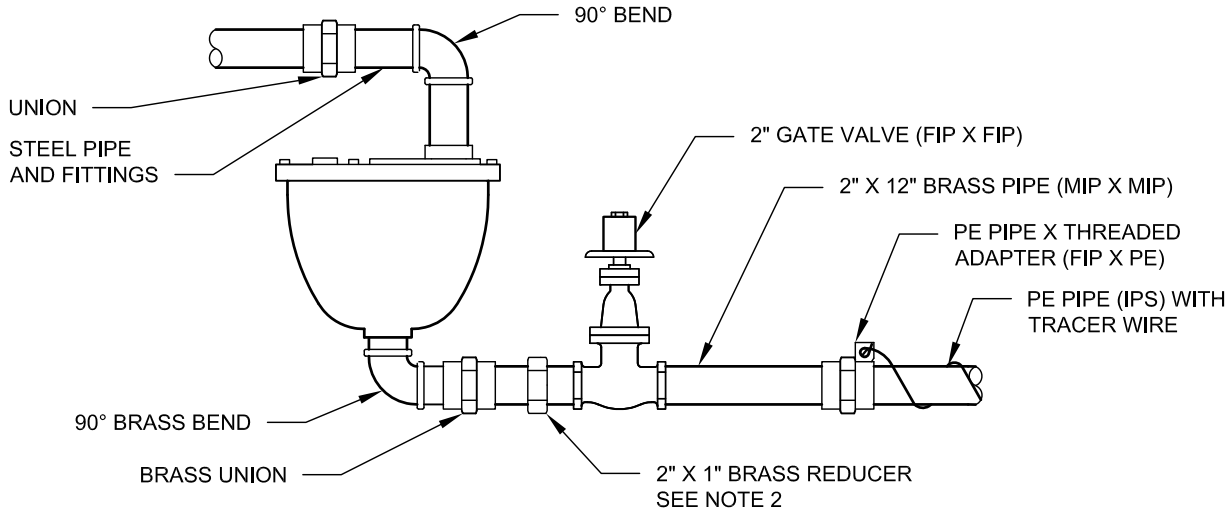

VALVE ASSEMBLY DETAIL

NTS

NOTES:

1. COMBINATION AIR RELEASE AND VACUUM VALVE SHALL BE A 2 INCH SIZE MINIMUM - UNLESS OTHERWISE SHOWN ON THE CONSTRUCTION DRAWINGS.
2. FOR 1 INCH COMBINATION VALVE, INSTALL 2 INCH X 1 INCH REDUCER BETWEEN GATE VALVE AND UNION.
3. FILL METER BOX WITH SAWDUST AFTER TESTING AND INSPECTION.
4. INSTALL STANDARD MARKER POST IDENTIFYING VALVE LOCATION (NOT SHOWN).
5. SET METER BOX FLUSH WITH SIDEWALK OR CURB ELEVATION IF LOCATED IN LAWN AREA. SET METER BOX APPROXIMATELY 2 INCHES ABOVE FINISHED GRADE IF IN LANDSCAPED AREA.

Scott Thomasson APPROVED BY: SCOTT THOMASSON WATER/WASTEWATER ENGINEERING MANAGER	CityofRedmond WASHINGTON	STANDARD DETAILS **COMBINATION AIR RELEASE AND VACUUM VALVE ASSEMBLY**
REVISION DATE: JULY 01, 2015		FILE NAME: SD706.DWG — DETAIL NUMBER: **706**

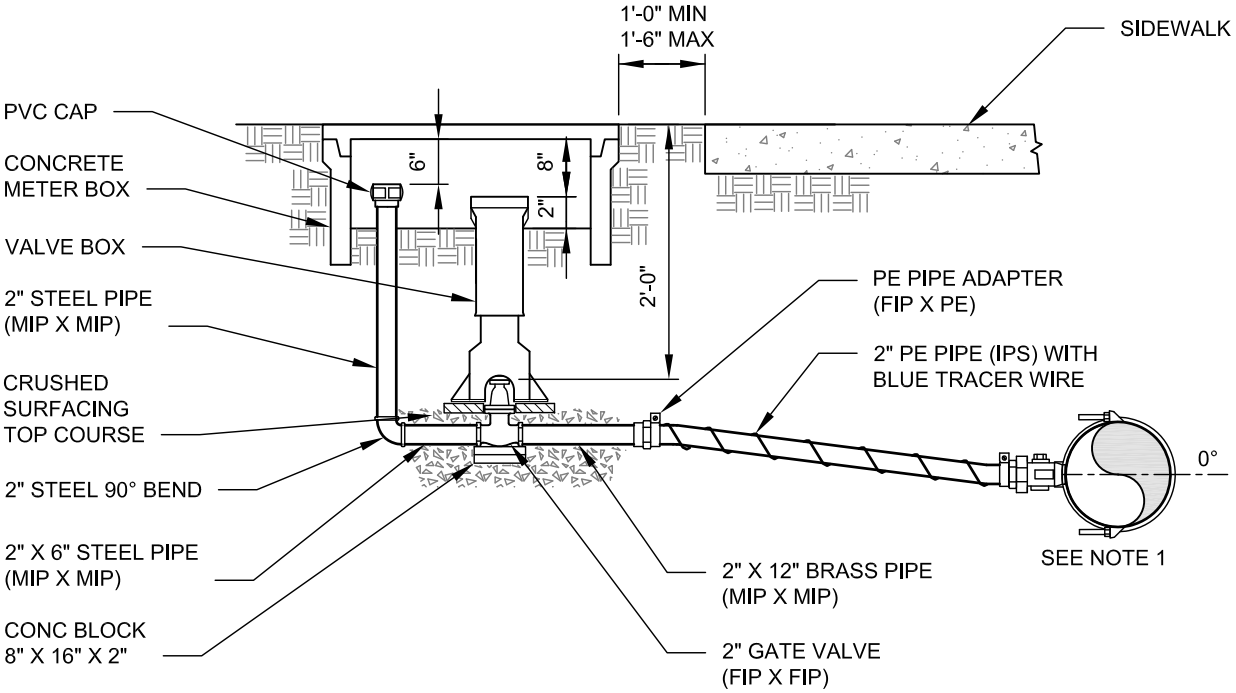

SECTION

NTS

NOTES:

1. SEE STANDARD DETAIL 701A FOR CONNECTION TO MAIN.
2. SET METER BOX FLUSH WITH SIDEWALK OR CURB ELEVATION IF LOCATED IN LAWN AREA. SET METER BOX APPROXIMATELY 2 INCHES ABOVE FINISHED GRADE IF IN LANDSCAPING AREA.
3. INSTALL STANDARD MARKER POST IDENTIFYING BLOW-OFF LOCATION. (NOT SHOWN)
4. ANY ADDITIONAL FITTINGS FROM THE GATE VALVE TO THE MAIN SHALL BE BRASS.

APPROVED BY: SCOTT THOMASSON WATER/WASTEWATER ENGINEERING MANAGER	CityofRedmond WASHINGTON	STANDARD DETAILS **BLOW-OFF ASSEMBLY**
REVISION DATE: JULY 01, 2015		FILE NAME: SD707.DWG — DETAIL NUMBER: **707**

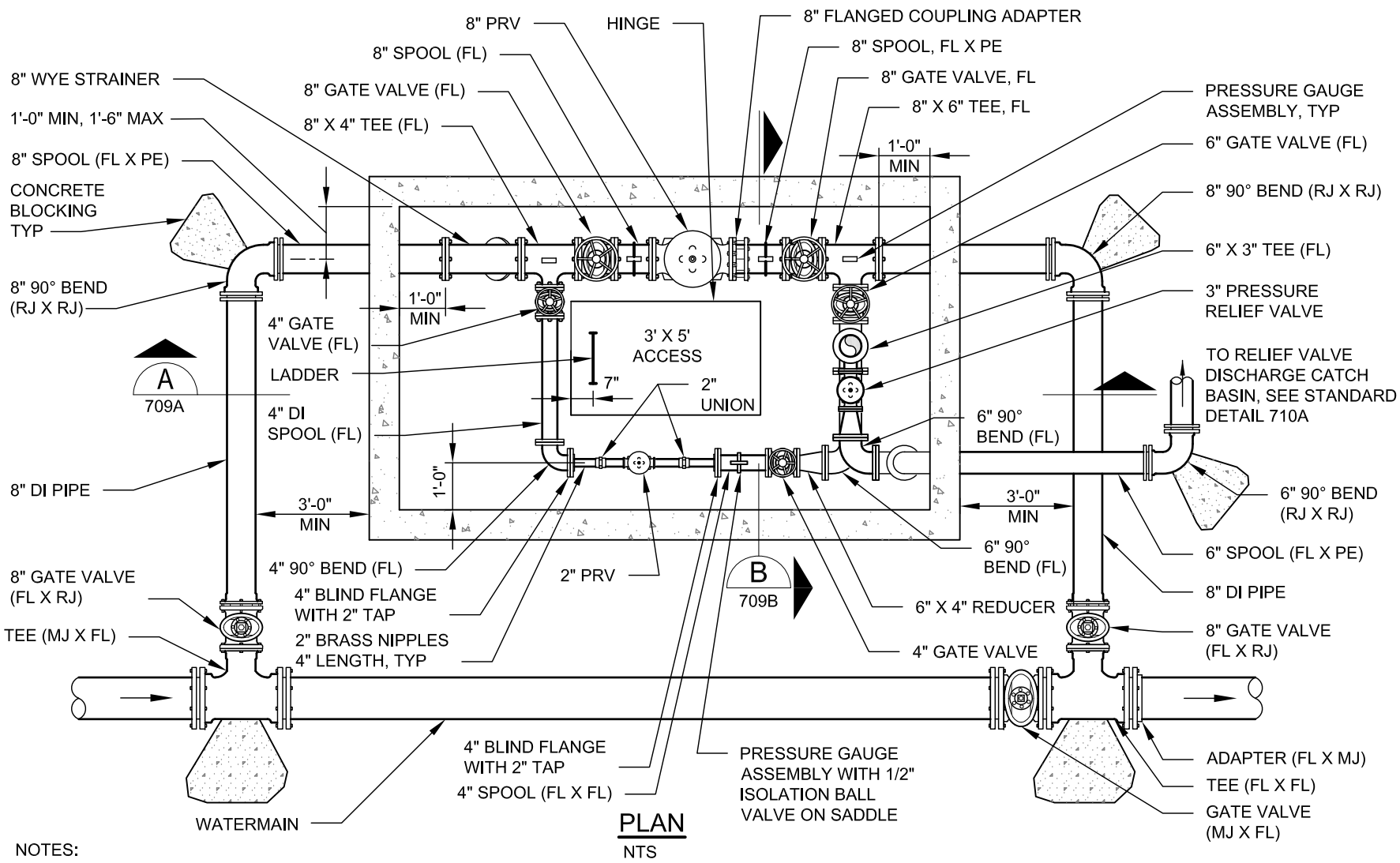

PLAN

NTS

NOTES:

1. 8 INCH PRV STATION SHOWN. 6 INCH PRV STATION IS IDENTICAL EXCEPT THE UPSTREAM AND DOWNSTREAM PIPING, FITTINGS, AND VALVES ARE 6 INCH.
2. PAINT ALL EXPOSED PIPING AND FITTINGS WITHIN VAULT AND ABOVE GRADE.
3. ALL VALVES INSIDE VAULT TO HAVE HAND WHEEL OPERATORS.
4. ALL 2 INCH PIPE INSIDE VAULT TO BE BRASS.
5. PRV PILOT SYSTEM TO BE INSTALLED FACING INTERIOR OF VAULT.
6. VAULT SHALL HAVE MINIMUM INSIDE DIMENSIONS OF 14 FOOT IN LENGTH, 8 FOOT IN WIDTH, AND 8 FOOT IN HEIGHT.
7. SHOP DRAWINGS MUST BE APPROVED PRIOR TO VAULT INSTALLATION AND PIPE ASSEMBLY.

APPROVED BY: SCOTT THOMASSON
WATER/WASTEWATER ENGINEERING MANAGER

REVISION DATE: JULY 01, 2015

CityofRedmond WASHINGTON

FILE NAME: SD708.DWG

DETAIL NUMBER: **708**

STANDARD DETAILS

6" AND 8" PRV STATION PLAN

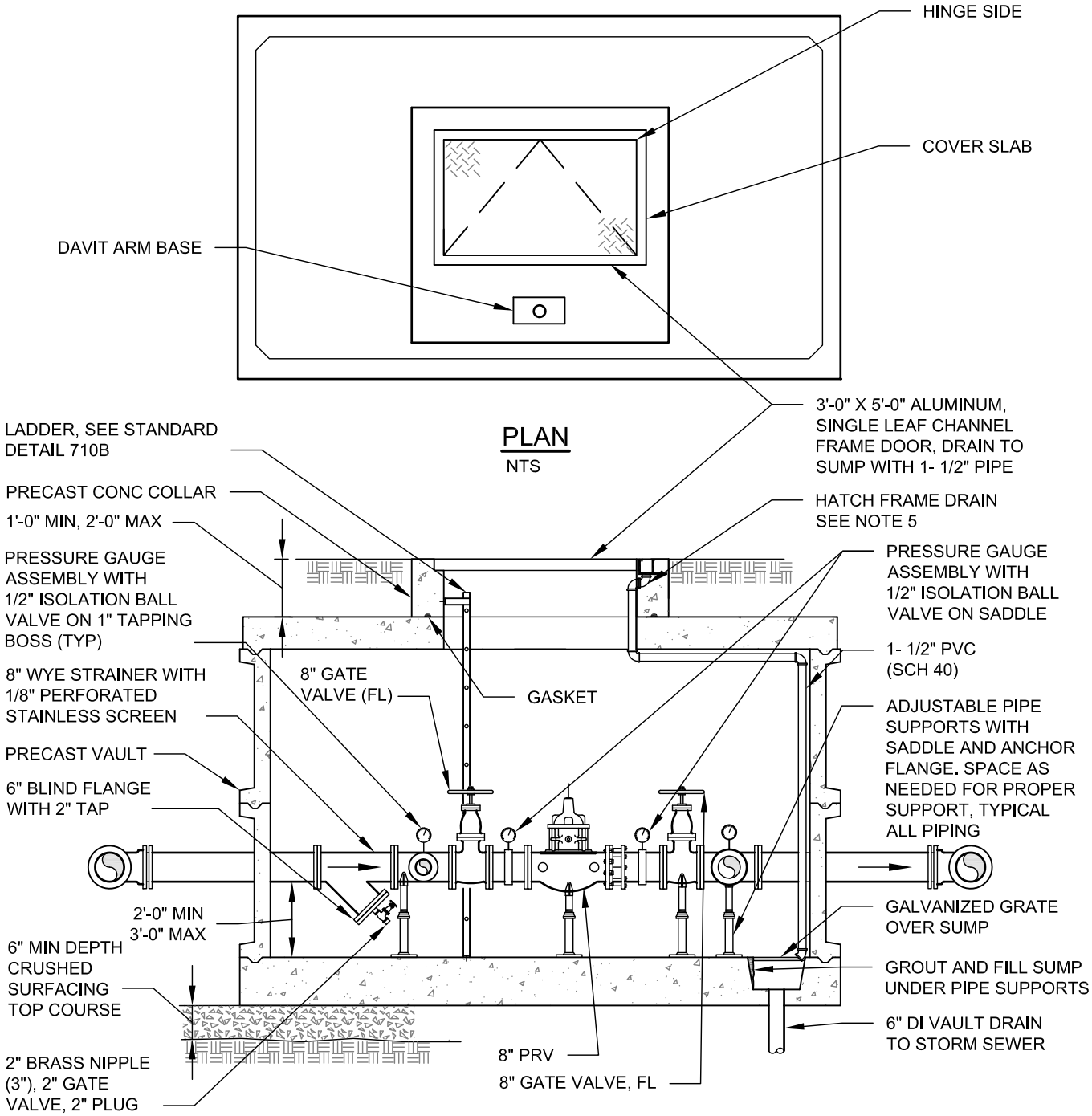

NOTES:

1. 8 INCH PRV STATION SHOWN. 6 INCH PRV STATION IS IDENTICAL EXCEPT THAT THE UPSTREAM AND DOWNSTREAM PIPING, FITTINGS, AND VALVES ARE 6 INCHES.
2. PAINT ALL EXPOSED PIPING AND FITTINGS WITHIN VAULT AND ABOVE GRADE.
3. ALL VALVES WITHIN VAULT TO HAVE HAND WHEEL OPERATORS.
4. SET COVER SLAB FLUSH WITH SIDEWALK OR CURB ELEVATION IF LOCATED IN LAWN AREA.
   SET COVER SLAB APPROXIMATELY 2 INCHES ABOVE FINISHED GRADE IF LOCATED IN LANDSCAPING AREA.
5. HATCH FRAME DRAIN CAST IN CONCRETE SHALL BE 1- 1/2 INCH BRASS. REMAINDER OF HATCH FRAME DRAIN SHALL BE 1-1/2 INCH SCH 40 PVC IN VAULT. USE 45° BENDS WHERE POSSIBLE AND PROVIDE UNIONS TO ALLOW DISASSEMBLY OF PIPING. ATTACH TO VAULT WITH STAINLESS STEEL HARDWARE.

Scott Thomasson APPROVED BY: SCOTT THOMASSON WATER/WASTEWATER ENGINEERING MANAGER	City of Redmond WASHINGTON	STANDARD DETAILS **6" AND 8" PRV STATION**
REVISION DATE: JULY 01, 2015		FILE NAME: SD709A.DWG — DETAIL NUMBER: **709A**

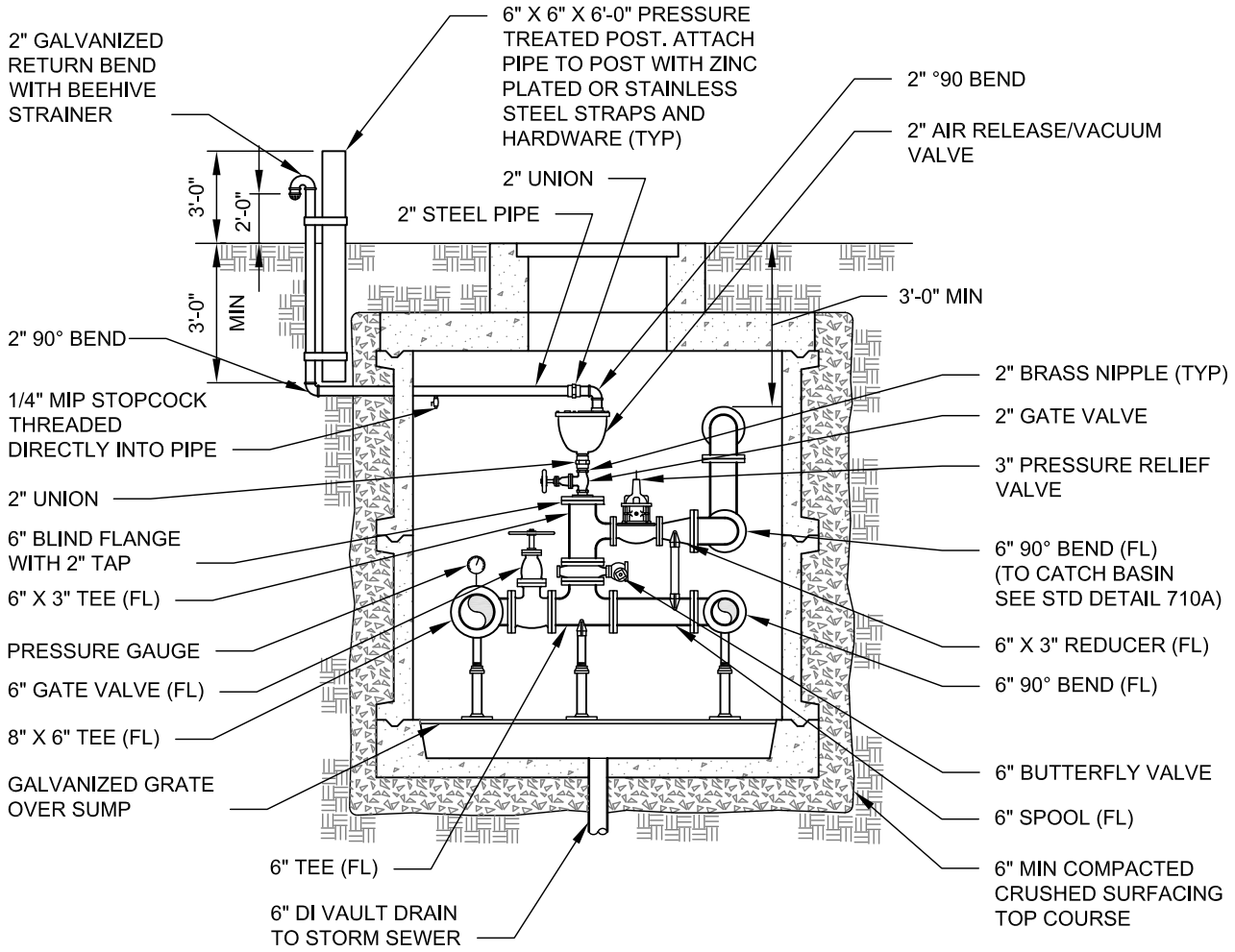

SECTION B
708
NTS

NOTES:

1. 8 INCH PRV STATION SHOWN. 6 INCH PRV STATION IS IDENTICAL EXCEPT THE UPSTREAM AND DOWNSTREAM PIPING, FITTINGS, AND VALVES ARE 6 INCHES.
2. PAINT ALL EXPOSED PIPING AND FITTINGS WITHIN VAULT AND ABOVE GRADE.
3. ALL VALVES INSIDE VAULT TO HAVE HAND WHEEL OPERATORS.
4. SET COVER SLAB FLUSH WITH SIDEWALK OR CURB ELEVATION IF LOCATED IN LAWN AREA.
   SET COVER SLAB APPROXIMATELY 2 INCHES ABOVE FINISHED GRADE IF LOCATED IN LANDSCAPING AREA.

APPROVED BY: SCOTT THOMASSON WATER/WASTEWATER ENGINEERING MANAGER	CityofRedmond WASHINGTON	STANDARD DETAILS **6" AND 8" PRV STATION SECTION**
REVISION DATE: JULY 01, 2015		FILE NAME: SD709B.DWG / DETAIL NUMBER: **709B**

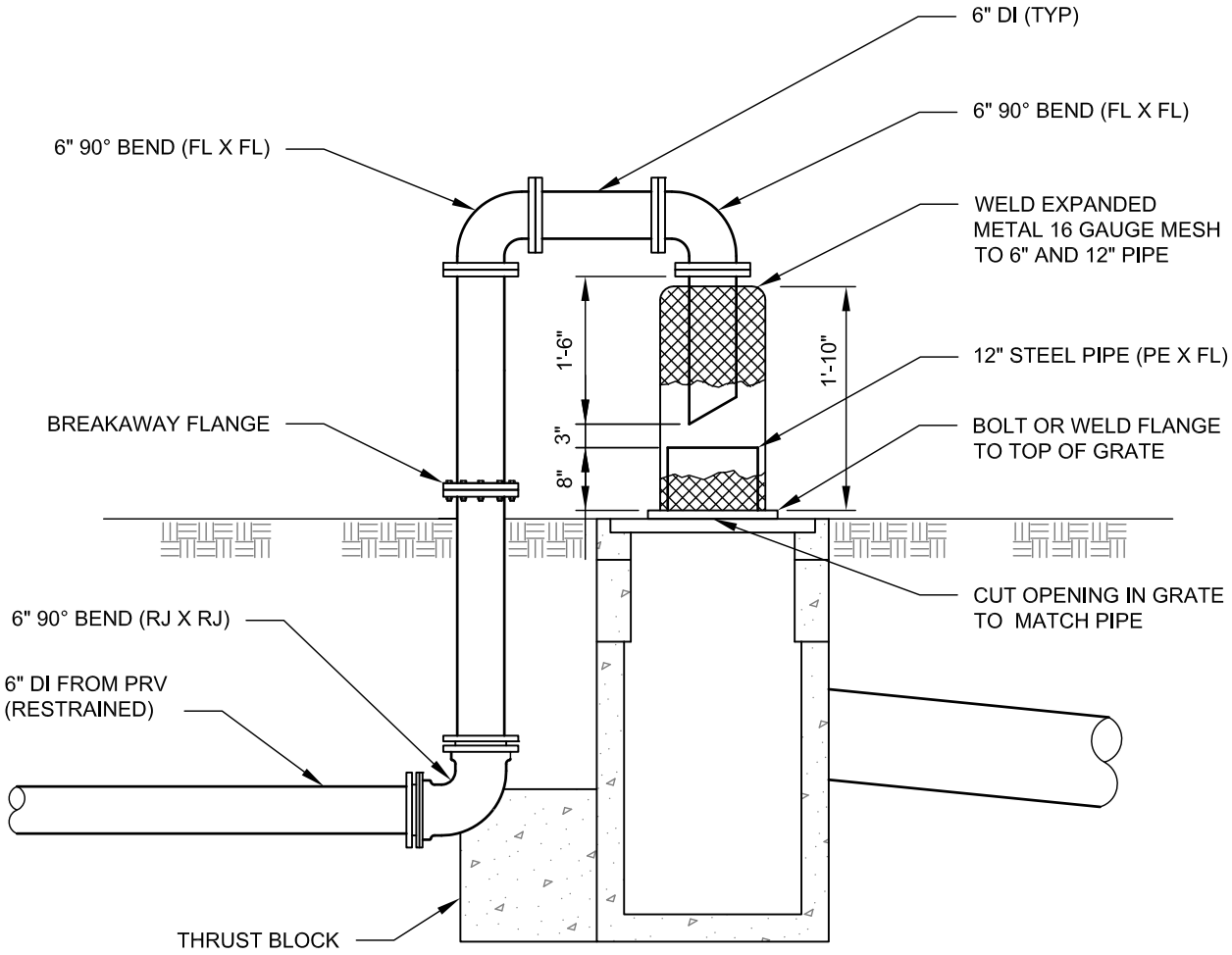

CATCH BASIN DETAIL

NTS

NOTE:

PAINT ALL EXPOSED PIPING AND FITTINGS ABOVE GRADE.

APPROVED BY: SCOTT THOMASSON WATER/WASTEWATER ENGINEERING MANAGER	CityofRedmond WASHINGTON	STANDARD DETAILS **6" AND 8" PRV STATION MISC DETAILS**
REVISION DATE: JULY 01, 2014		FILE NAME: SD710A.DWG / DETAIL NUMBER: **710A**

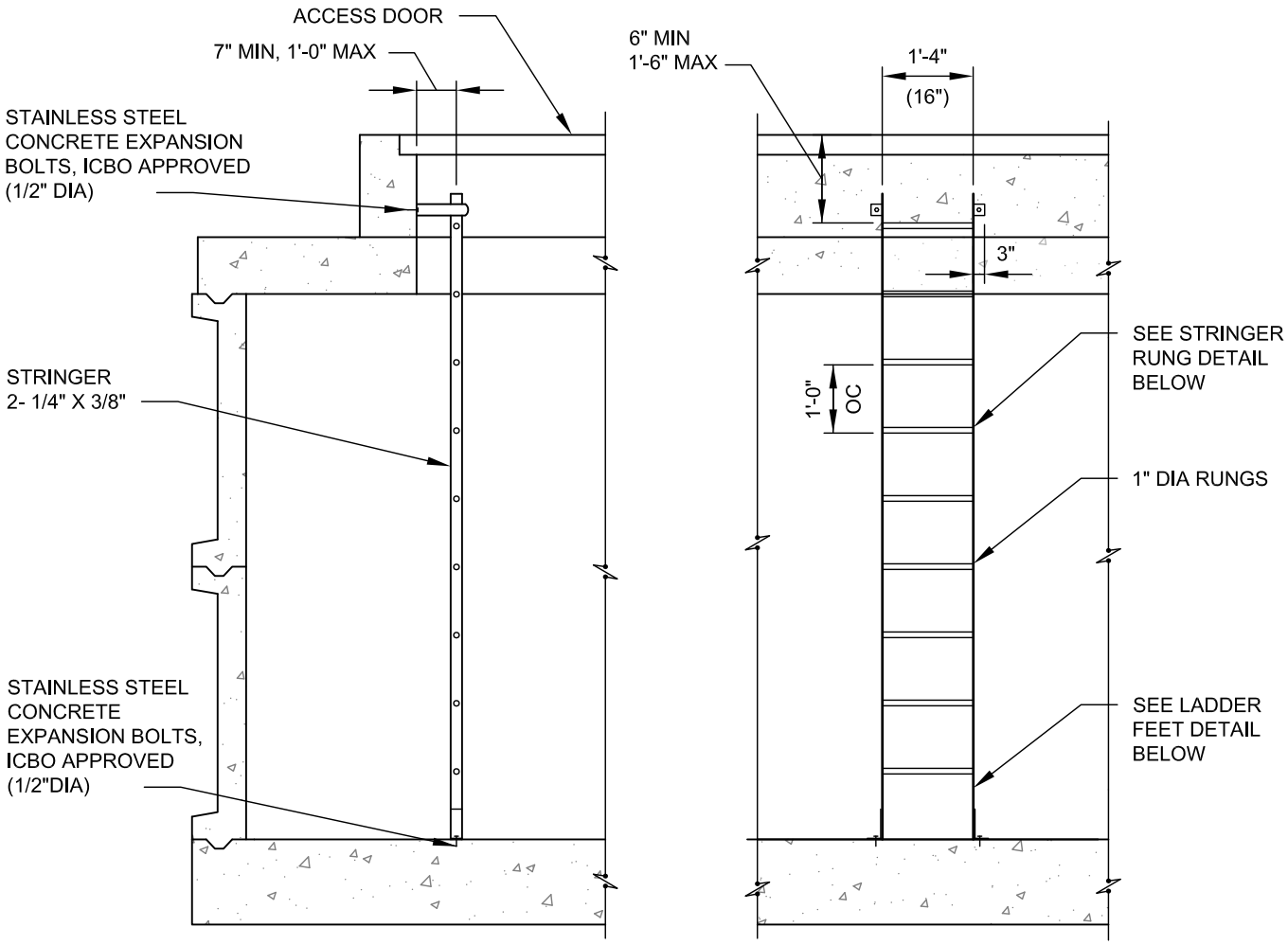

NOTES:

ALL RUNGS SHALL BE CORREGATED, KNURLED, DIMPLED, COATED WITH SKID-RESISTANT MATERIAL, OR OTHERWISE TREATED TO MINIMIZE SLIPPING.

ALUMINUM LADDER SECTION

NTS

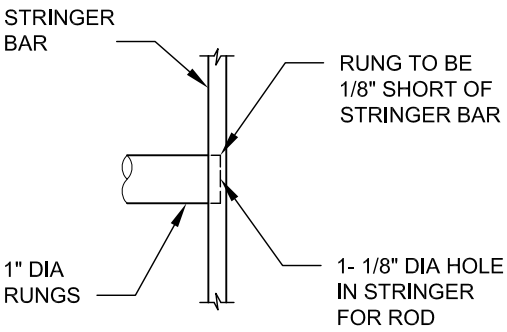

STRINGER / RUNG DETAIL

NTS

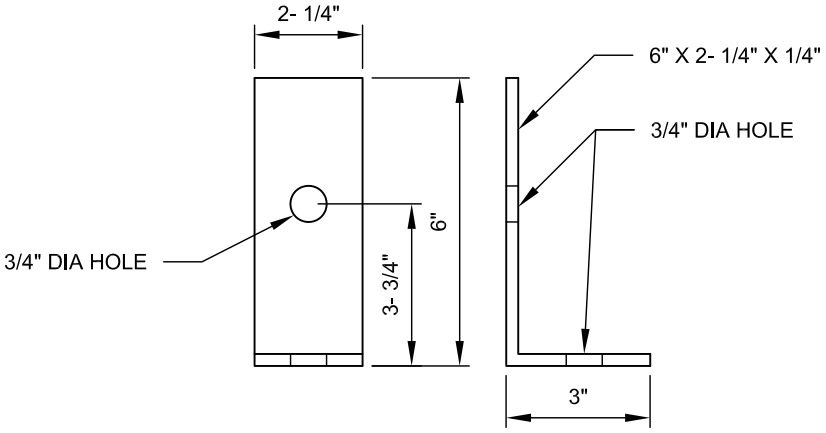

LADDER FEET DETAIL

NTS

Scott Thomasson

APPROVED BY: SCOTT THOMASSON
WATER/WASTEWATER ENGINEERING MANAGER

REVISION DATE: JULY 01, 2015

CityofRedmond WASHINGTON

STANDARD DETAILS

WATER METER VAULT AND PRV STATION LADDER DETAILS

FILE NAME: SD710B.DWG

DETAIL NUMBER: **710B**

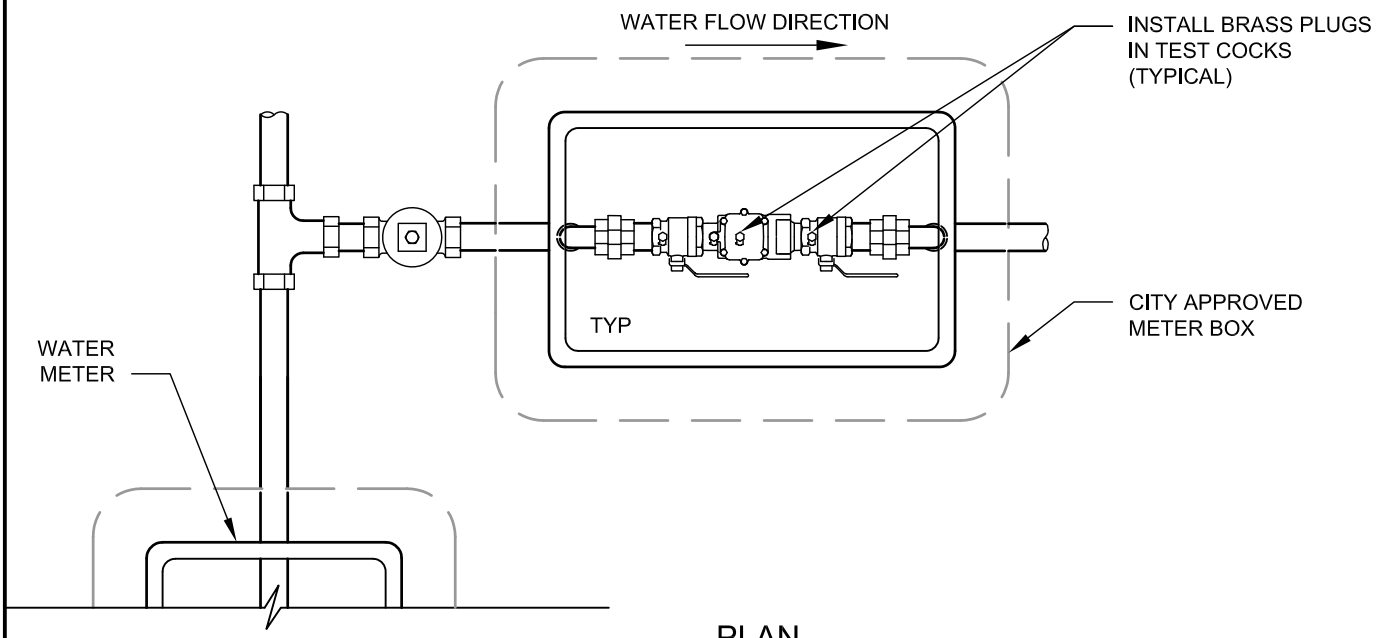

PLAN

NTS

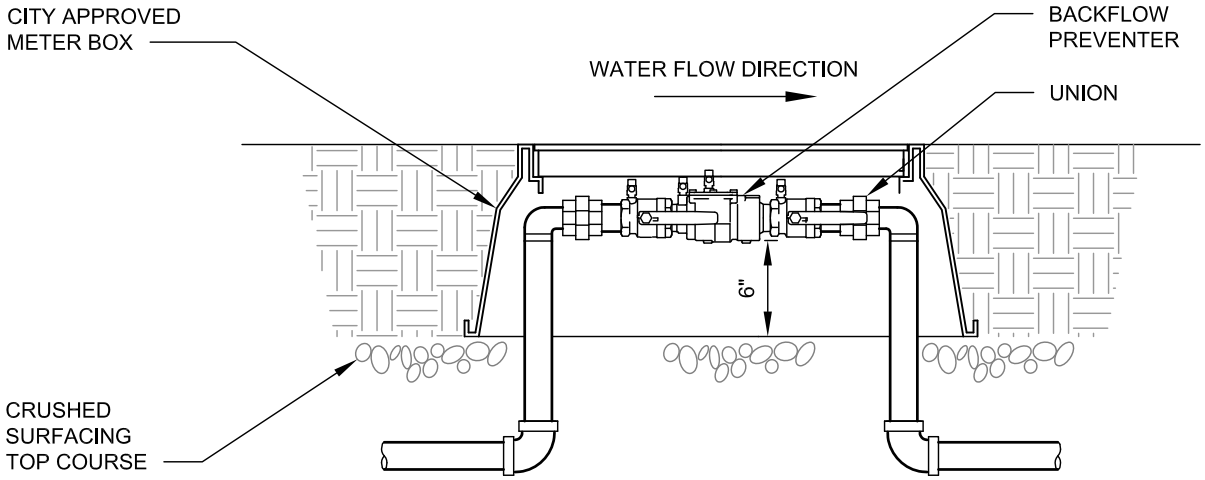

ELEVATION

NTS

NOTES:

1. DOUBLE CHECK VALVE ASSEMBLY SHALL MEET REQUIREMENTS OF THE LATEST EDITION AWWA "ACCEPTED PROCEDURE AND PRACTICE IN CROSS-CONNECTION CONTROL" MANUAL.
2. DEVICES MUST BE ON THE LATEST EDITION OF THE WASHINGTON STATE HEALTH DEPARTMENT LIST OF APPROVED CROSS-CONNECTION CONTROL DEVICES.
3. METER BOX SIZE SHOULD BE THE SIZE SPECIFIED FOR THE METER SIZE EQUIVALENT TO THE BACKFLOW PREVENTOR SIZE.
4. IRRIGATION BLOW OUT CONNECTION FOR WINTERIZATION SHALL BE LOCATED DOWNSTREAM OF THE DOUBLE CHECK VALVE ASSEMBLY IN A SEPARATE IRRIGATION VALVE BOX.

Scott Thomasson APPROVED BY: SCOTT THOMASSON WATER/WASTEWATER ENGINEERING MANAGER	CityofRedmond WASHINGTON	STANDARD DETAILS **IRRIGATION BACKFLOW PREVENTER (3/4" - 2")**
REVISION DATE: JULY 01, 2015		FILE NAME: SD711.DWG — DETAIL NUMBER: **711**

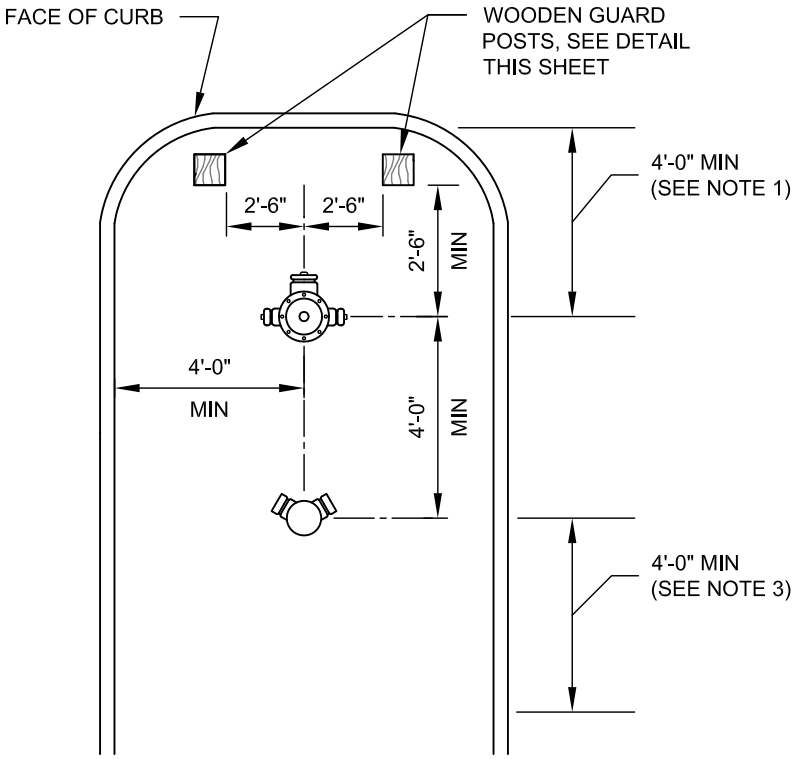

UNOBSTRUCTED ACCESS ROADWAY

NTS

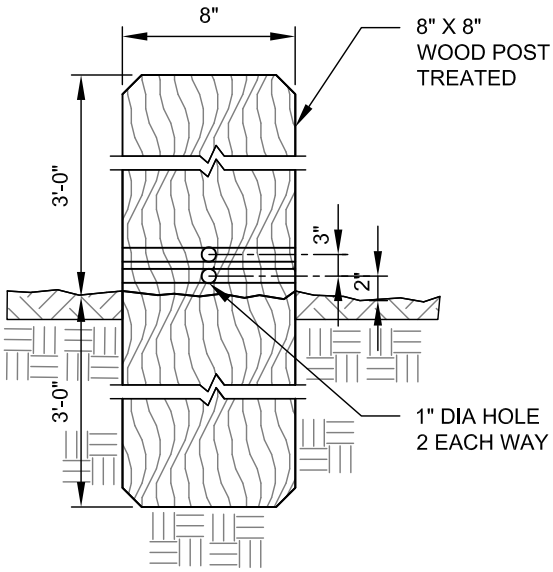

GUARD POST DETAIL

NTS

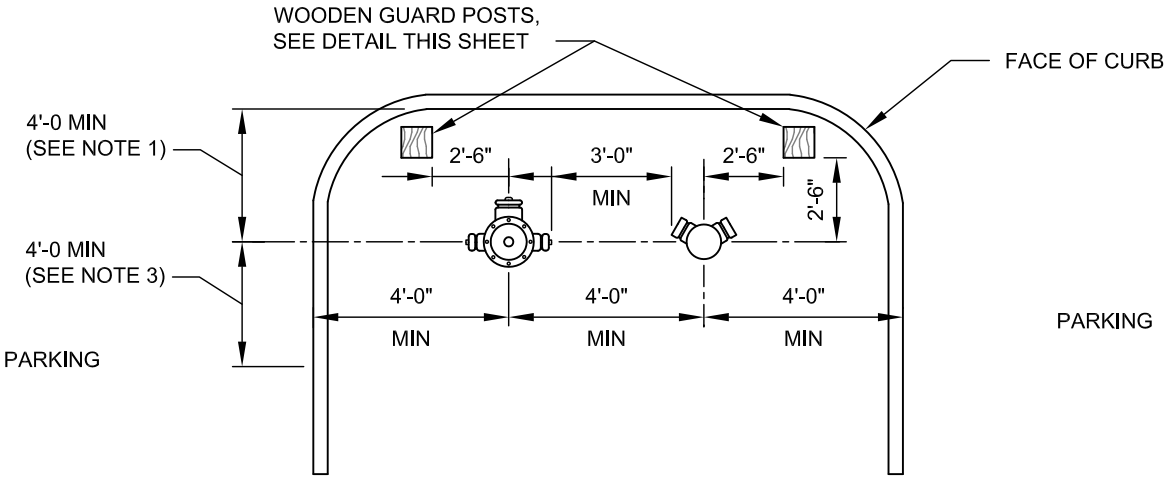

UNOBSTRUCTED ACCESS ROADWAY

NTS

NOTES:

1. GUARD POSTS ARE REQUIRED IF HYDRANT AND/OR FIRE DEPARTMENT CONNECTION ARE LESS THAN 4 FEET FROM CURB LINE, OR WHEN OTHERWISE DETERMINED NECESSARY BY THE FIRE MARSHAL OR WATER DEPARTMENT.
2. ONLY GROUND COVER LANDSCAPING SHALL BE PLANTED WITHIN DIMENSIONED AREAS.
3. A 4 FOOT MINIMUM AREA SHALL BE FREE FROM PLANTS OR SHRUBS OR OTHER OBSTRUCTIONS.
4. A 8 FOOT MINIMUM AREA SHALL BE FREE FROM TREES.
5. INSTALL 3/4 INCH VIKING AUTOMATIC BALL DRIP VALVE IN ACCORDANCE WITH NFPA STANDARDS. PLACE SADDLE ON HORIZONTAL PIPING (FDC LINE) 2 FEET FROM FITTING TO FDC.

APPROVED BY: SCOTT THOMASSON WATER/WASTEWATER ENGINEERING MANAGER	CityofRedmond WASHINGTON	STANDARD DETAILS **FIRE HYDRANT AND STANDPIPE LOCATION**
REVISION DATE: JULY 01, 2015		FILE NAME: SD712.DWG — DETAIL NUMBER: **712**

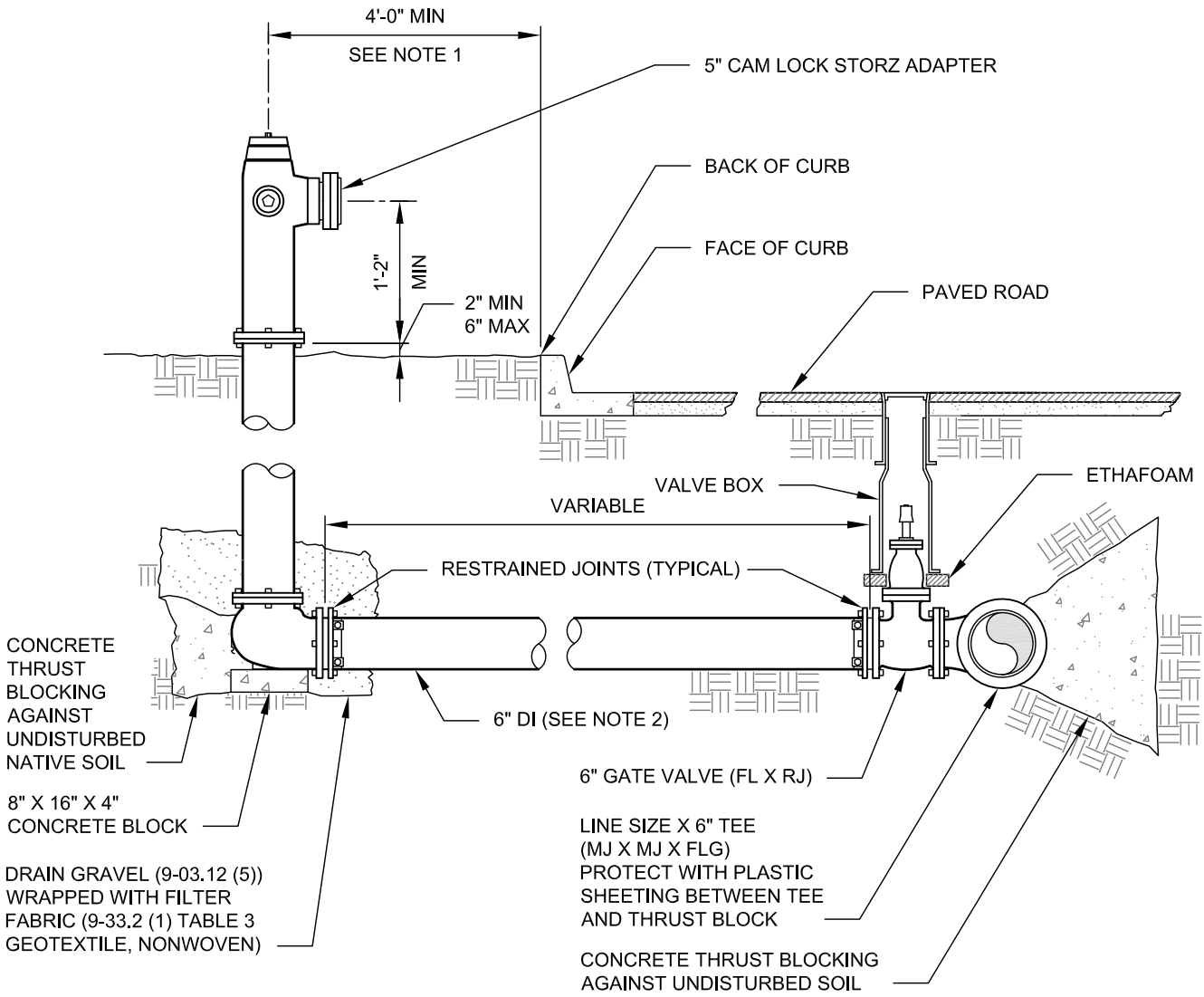

NOTES:

1. WHERE FIRE HYDRANT IS SHOWN BEHIND SIDEWALK, SET CENTER OF HYDRANT 2 FEET BEHIND WALK.
2. FIRE HYDRANT LINE SIZE SHALL BE A MINIMUM OF 8 INCH DIAMETER IF LENGTH IS GREATER THAN 50 FEET.

Scott Thomasson APPROVED BY: SCOTT THOMASSON WATER/WASTEWATER ENGINEERING MANAGER	CityofRedmond WASHINGTON	STANDARD DETAILS **FIRE HYDRANT ASSEMBLY**
REVISION DATE: JULY 01, 2015		FILE NAME: SD713.DWG — DETAIL NUMBER: **713**

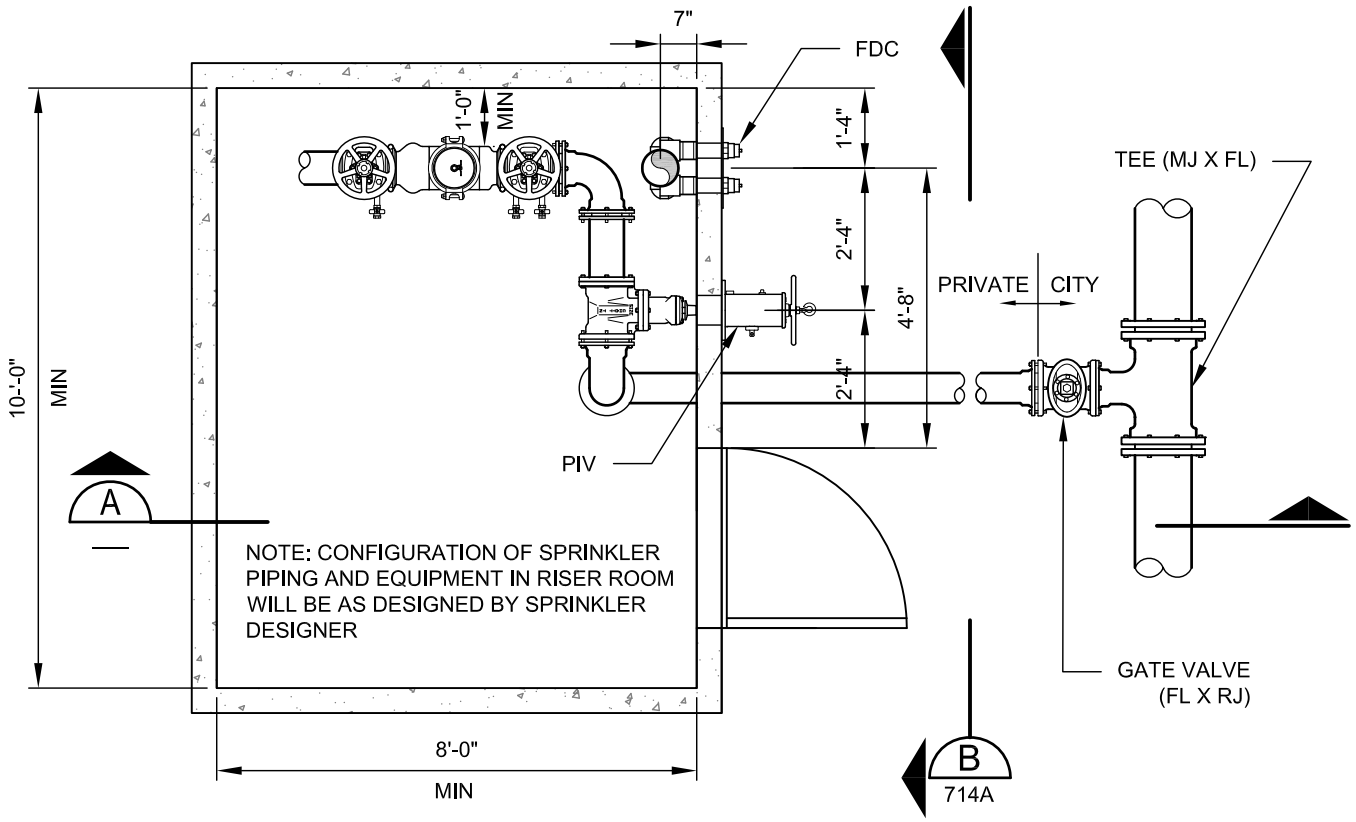

RISER ROOM PLAN

NTS

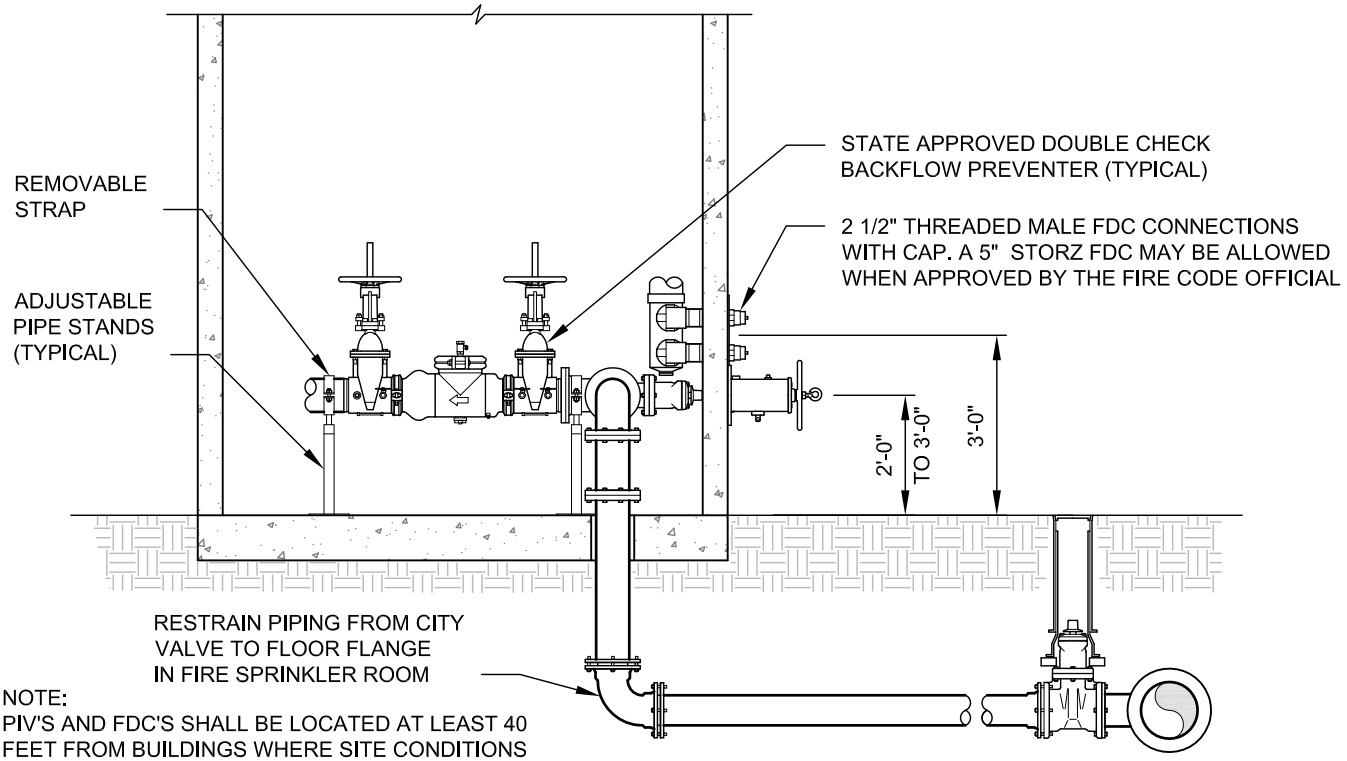

NOTE:
PIV'S AND FDC'S SHALL BE LOCATED AT LEAST 40 FEET FROM BUILDINGS WHERE SITE CONDITIONS ALLOW. WALL MOUNTED PIV'S AND FDC'S MAY BE USED WHEN APPROVED BY THE FIRE CODE OFFICIAL.

SECTION A

NTS

APPROVED BY: TODD SHORT ASSISTANT FIRE MARSHAL	CityofRedmond WASHINGTON	STANDARD DETAILS **FIRE SPRINKLER SYSTEM BACKFLOW PREVENTER**
REVISION DATE: JULY 01, 2015		FILE NAME: SD714.DWG — DETAIL NUMBER: **714**

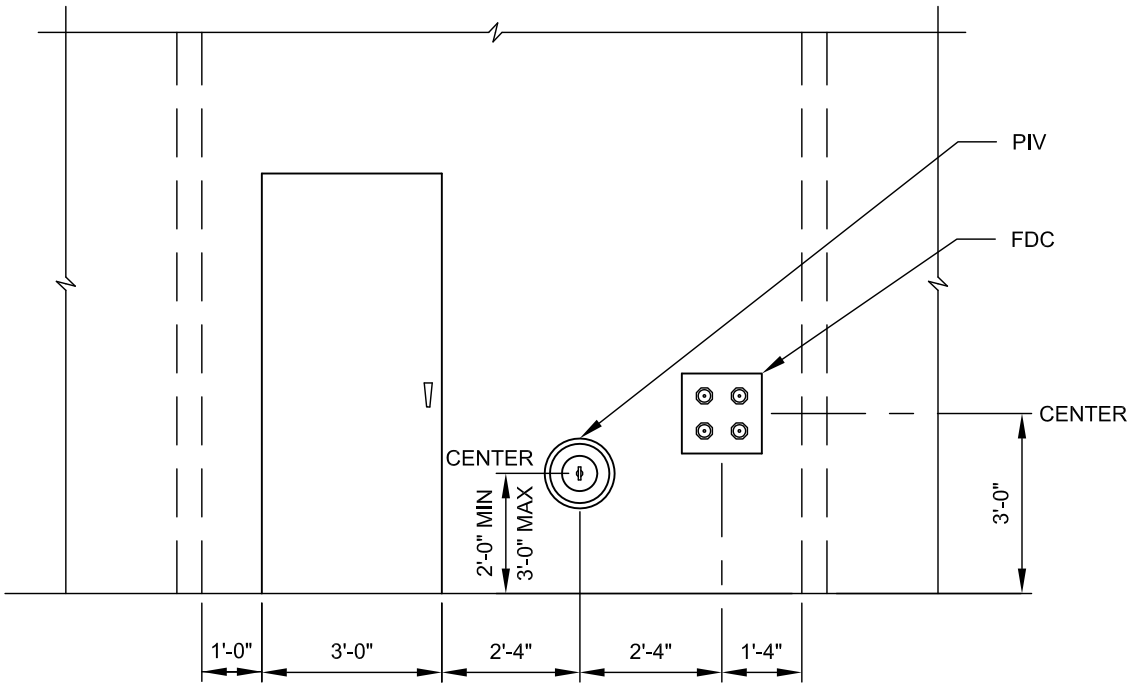

SECTION B
NTS 714

APPROVED BY: TODD SHORT
ASSISTANT FIRE MARSHAL

REVISION DATE: JULY 01, 2014

CityofRedmond
WASHINGTON

STANDARD DETAILS

FIRE SPRINKLER SYSTEM BACKFLOW PREVENTER

FILE NAME: SD714.DWG

DETAIL NUMBER: **714A**

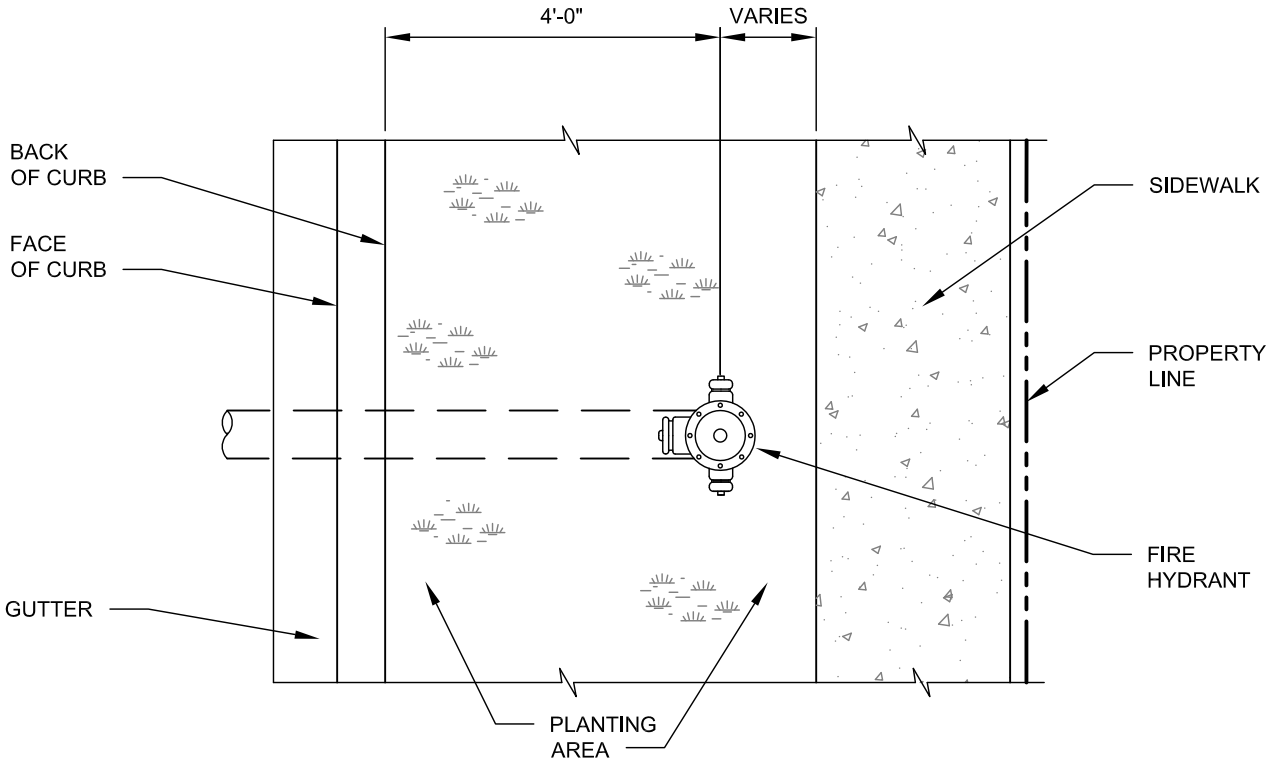

FIRE HYDRANT

NTS

APPROVED BY: SCOTT THOMASSON
WATER/WASTEWATER ENGINEERING MANAGER

REVISION DATE: JULY 01, 2014

CityofRedmond
WASHINGTON

STANDARD DETAILS

HYDRANT LOCATION WITHIN PLANTING AREA

FILE NAME: SD716.DWG

DETAIL NUMBER: **716**

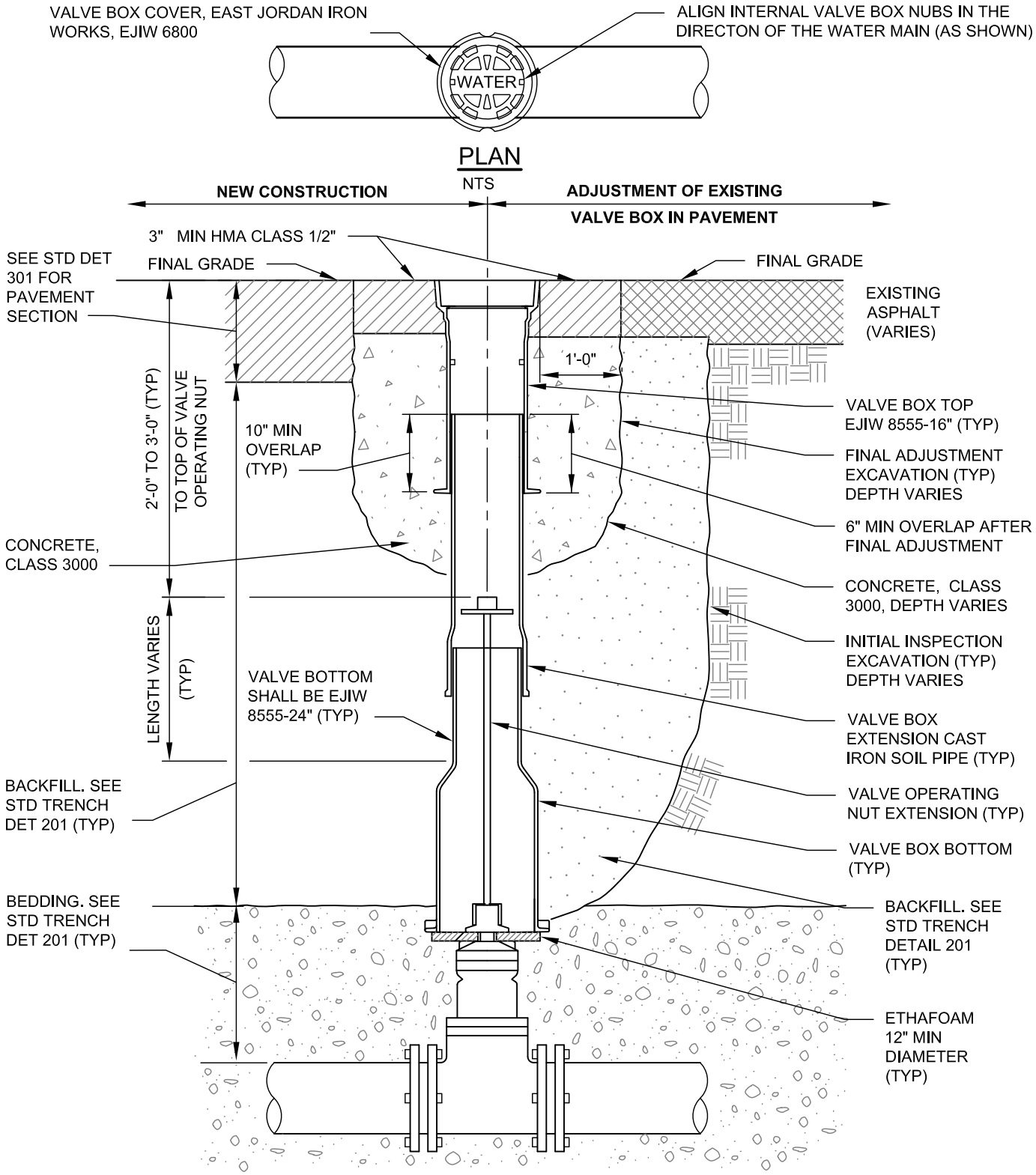

NOTES:

1. ALL EXISTING VALVE BOXES IN NEW PAVEMENT AREAS SHALL BE REPLACED WITH THE LATEST MODEL.
2. VALVE BOX LIDS SHALL BE INSTALLED FLUSH WITH FINISHED GRADE.
3. UTILITY ADJUSTMENTS TO FINAL GRADE SHALL BE DONE **AFTER** THE PAVING OPERATIONS ARE COMPLETE.

Scott Thomasson APPROVED BY: SCOTT THOMASSON WATER/WASTEWATER ENGINEERING MANAGER	CityofRedmond WASHINGTON	STANDARD DETAILS **VALVE BOX DETAIL**
REVISION DATE: JULY 01, 2015		FILE NAME: SD718.DWG / DETAIL NUMBER: **718**

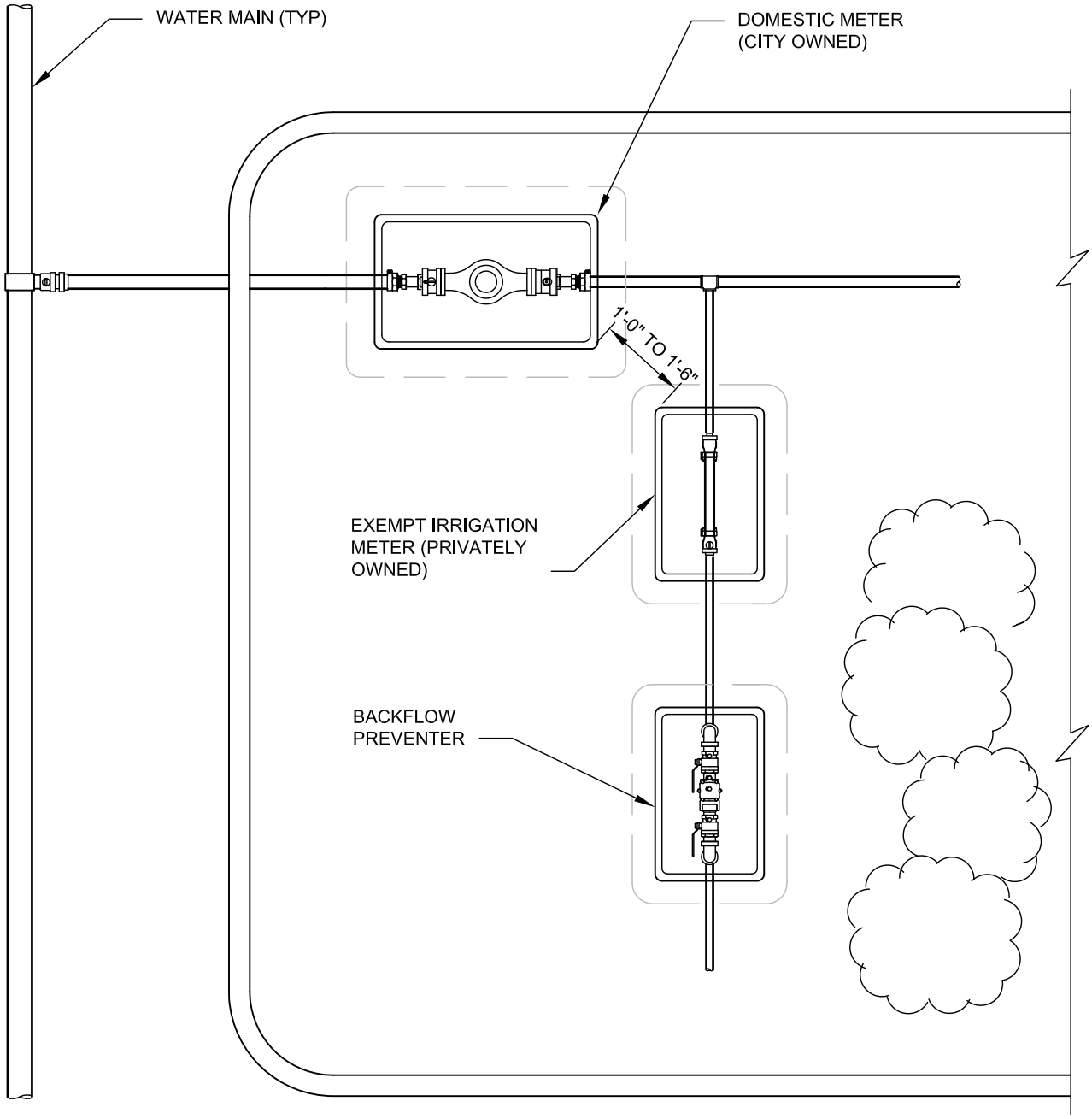

IRRIGATION METER PLAN

NTS

NOTES:

1. EXEMPT METERS SHALL BE PLACED GENERALLY PARALLEL WITH THE CITY WATER MAIN AND PERPENDICULAR TO THE CITY METER.
2. EXEMPT METERS SHALL BE PLACED BETWEEN 1 FOOT TO 1 FOOT 6 INCHES FROM THE CITY WATER METER.
3. INSTALL EXEMPT METER SETTER IN ACCORDANCE WITH STANDARD DETAIL 702.

APPROVED BY: SCOTT THOMASSON WATER/WASTEWATER ENGINEERING MANAGER	CityofRedmond WASHINGTON	STANDARD DETAILS **EXEMPT IRRIGATION METER LOCATION REQUIREMENTS**
REVISION DATE: JULY 01, 2014		FILE NAME: SD719.DWG — DETAIL NUMBER: **719**

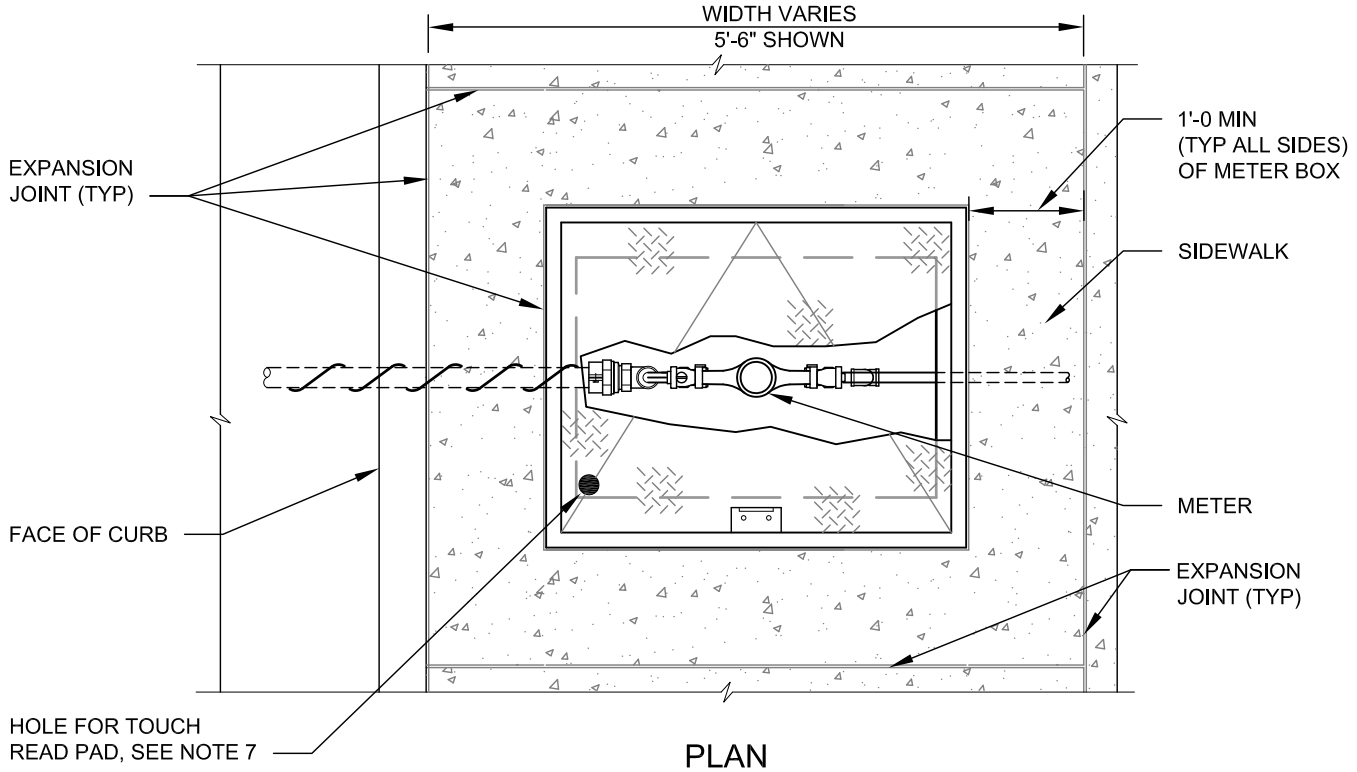

PLAN

NTS

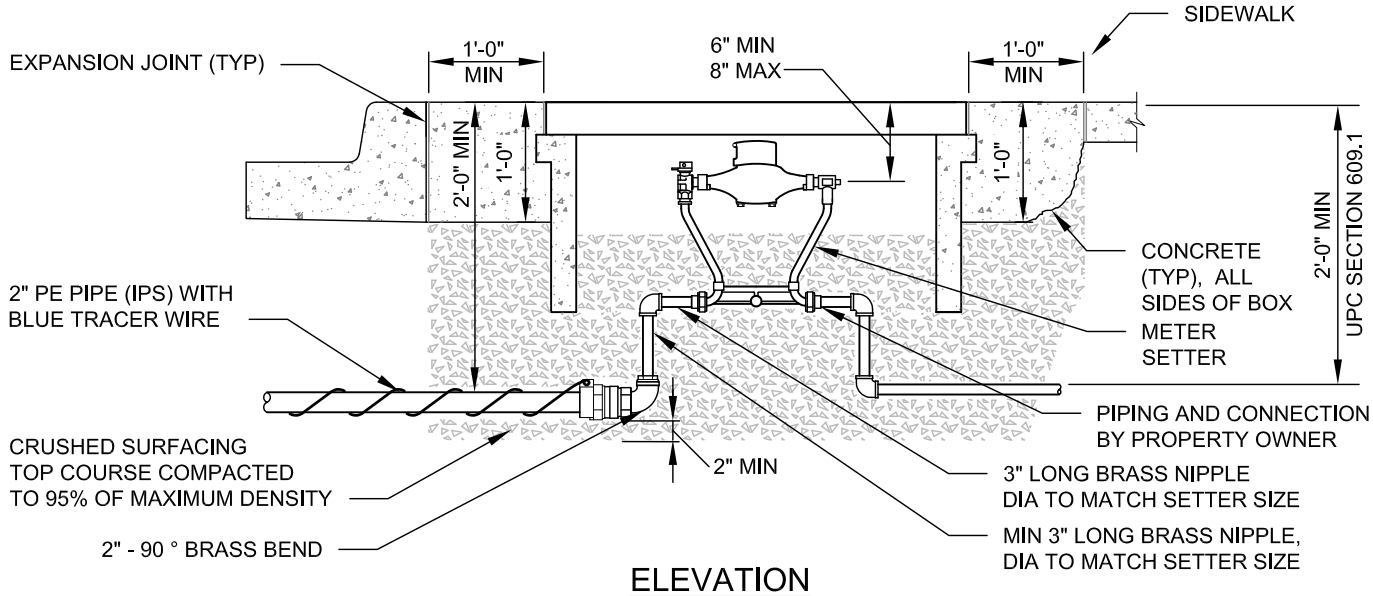

ELEVATION

NTS

NOTES:

1. THIS INSTALLATION SHALL ONLY BE USED IN URBAN STREETSCAPES WHERE LANDSCAPE AREAS ARE NOT AVAILABLE AND WHERE APPROVED BY THE CITY.
2. SEE STANDARD DETAIL 701A FOR ADDITIONAL DETAILS.
3. SET METER BOX FLUSH WITH SIDEWALK.
4. SERVICE CONNECTION PIPE SIZE SHALL BE 2 INCH DIAMETER.
5. ALL FITTINGS SHALL BE BRASS.
6. METER(S) SHALL BE CENTERED IN THE BOX TO MAINTAIN EVEN CLEARANCE FROM EDGES OF BOX.
7. TOUCH READ PAD HOLE TO BE DRILLED BY THE CITY.

Scott Thomasson APPROVED BY: SCOTT THOMASSON WATER/WASTEWATER ENGINEERING MANAGER	CityofRedmond WASHINGTON	STANDARD DETAILS **5/8" X 3/4" AND 1" METER IN SIDEWALK**
REVISION DATE: JULY 01, 2015		FILE NAME: SD720.DWG — DETAIL NUMBER: **720**

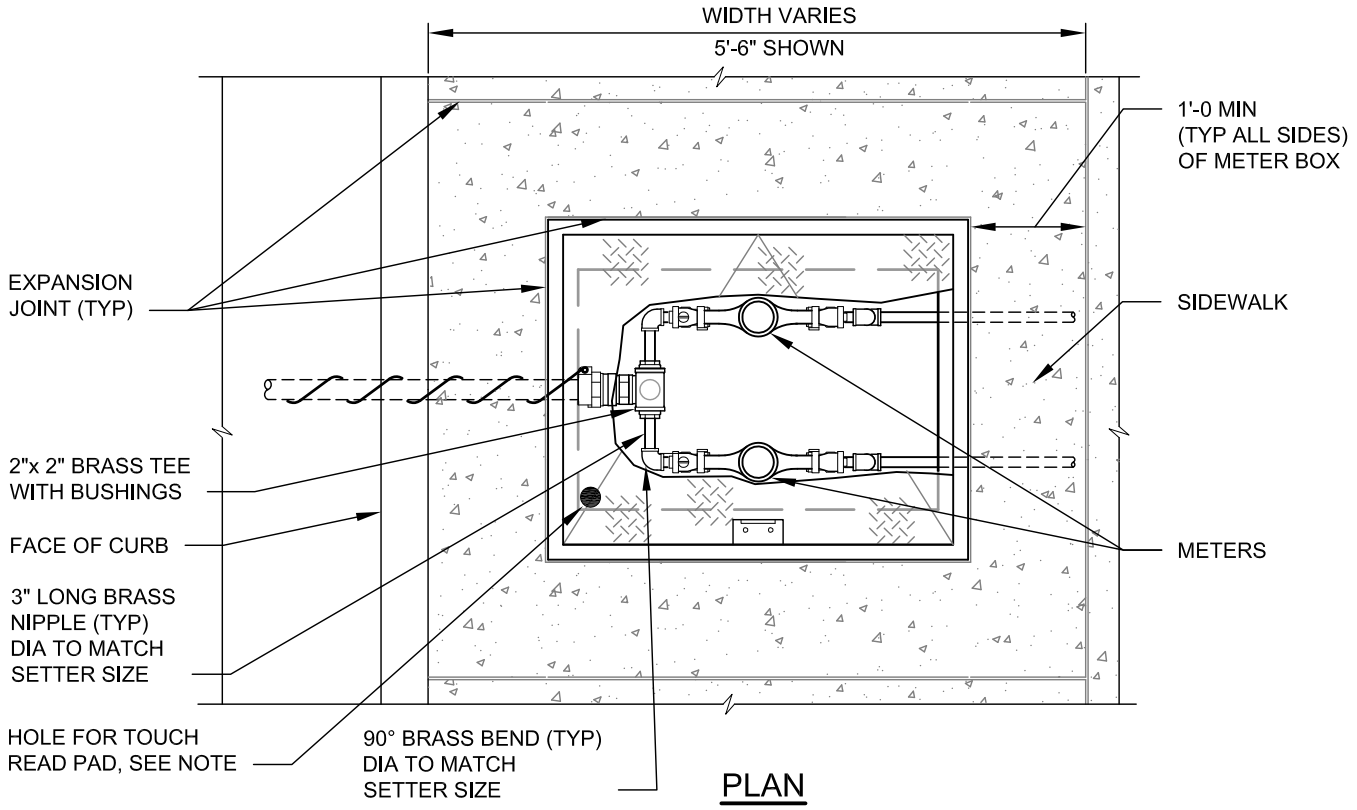

PLAN

NTS

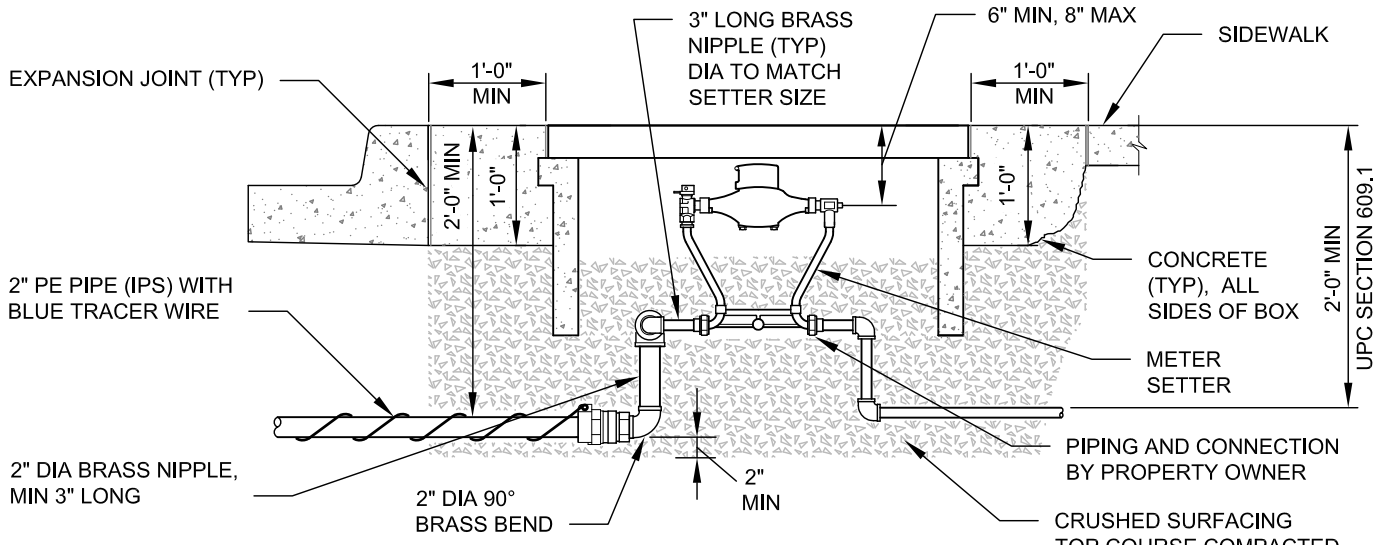

ELEVATION

NTS

NOTES:

1. THIS INSTALLATION SHALL ONLY BE USED IN URBAN STREETSCAPES WHERE LANDSCAPE AREAS ARE NOT AVAILABLE AND WHERE APPROVED BY THE CITY.
2. SEE STANDARD DETAIL 701A FOR ADDITIONAL DETAILS.
3. SET METER BOX FLUSH WITH SIDEWALK.
4. SERVICE CONNECTION PIPE SIZE SHALL BE 2 INCH DIAMETER.
5. ALL FITTINGS SHALL BE BRASS.
6. METER(S) SHALL BE CENTERED IN THE BOX TO MAINTAIN EVEN CLEARANCE FROM EDGES OF BOX.
7. TOUCH READ PAD HOLE TO BE DRILLED BY THE CITY.

Scott Thomasson APPROVED BY: SCOTT THOMASSON WATER/WASTEWATER ENGINEERING MANAGER	CityofRedmond WASHINGTON	STANDARD DETAILS **5/8" X 3/4" AND 1" DOUBLE METERS IN SIDEWALK**
REVISION DATE: JULY 01, 2015		FILE NAME: SD721.DWG / DETAIL NUMBER: **721**

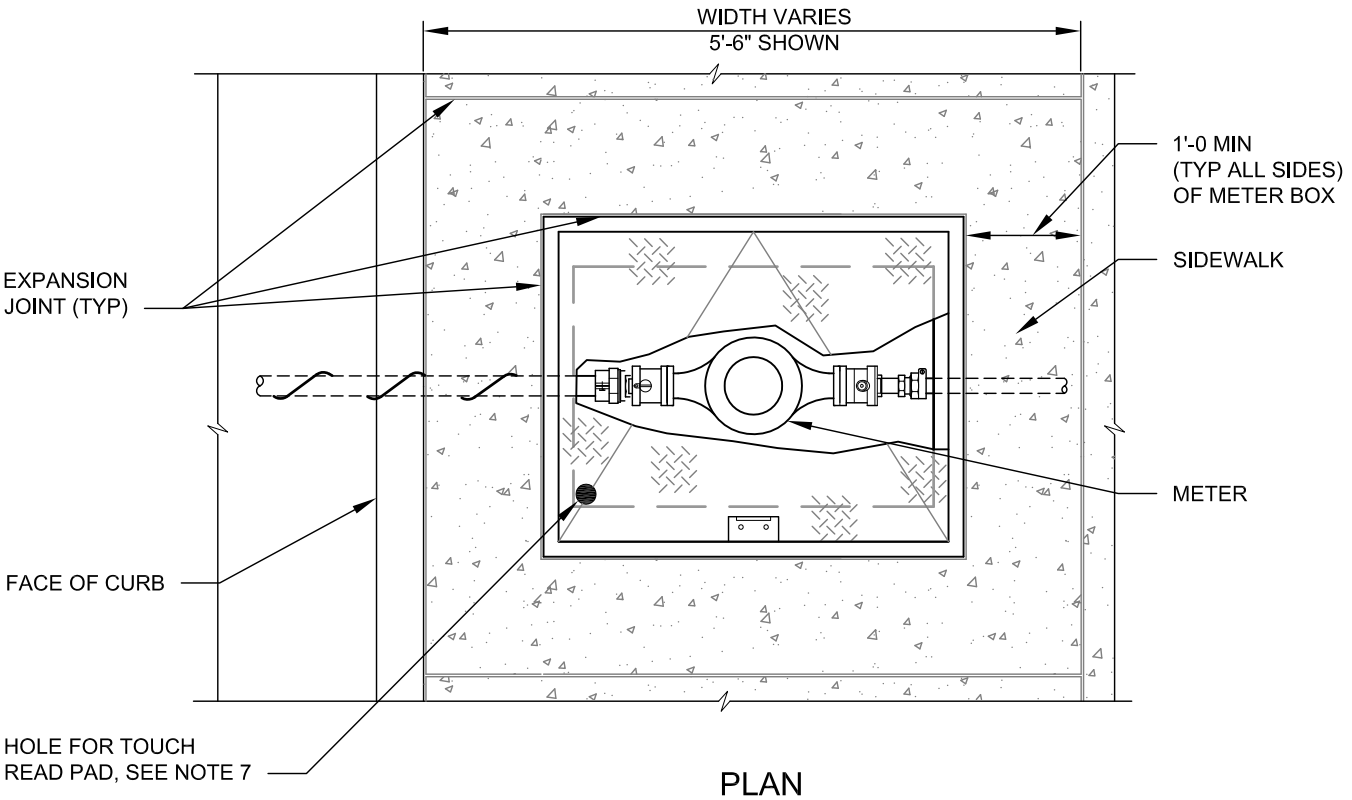

PLAN

NTS

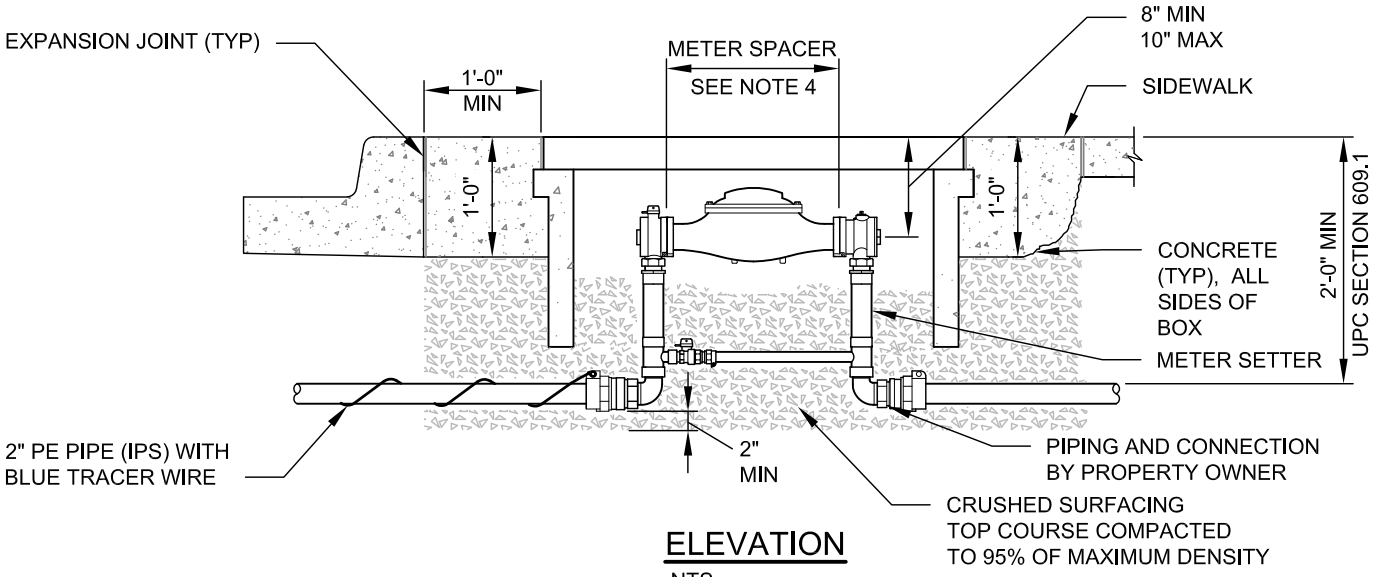

ELEVATION

NTS

NOTES:

1. THIS INSTALLATION SHALL ONLY BE USED IN URBAN STREETSCAPES WHERE LANDSCAPE AREAS ARE NOT AVAILABLE AND WHERE APPROVED BY THE CITY.
2. SEE STANDARD DETAIL 701A FOR ADDITIONAL DETAILS.
3. SET METER BOX FLUSH WITH SIDEWALK.
4. SERVICE CONNECTION PIPE SIZE SHALL BE 2 INCH DIAMETER..
5. ALL FITTINGS SHALL BE BRASS.
6. METER(S) SHALL BE CENTERED IN THE BOX TO MAINTAIN EVEN CLEARANCE FROM EDGES OF BOX.
7. TOUCH READ PAD HOLE TO BE DRILLED BY THE CITY.

Scott Thomasson APPROVED BY: SCOTT THOMASSON WATER/WASTEWATER ENGINEERING MANAGER	CityofRedmond WASHINGTON	STANDARD DETAILS **1 1/2" AND 2" METER IN SIDEWALK**
REVISION DATE: JULY 01, 2015		FILE NAME: SD722.DWG / DETAIL NUMBER: **722**