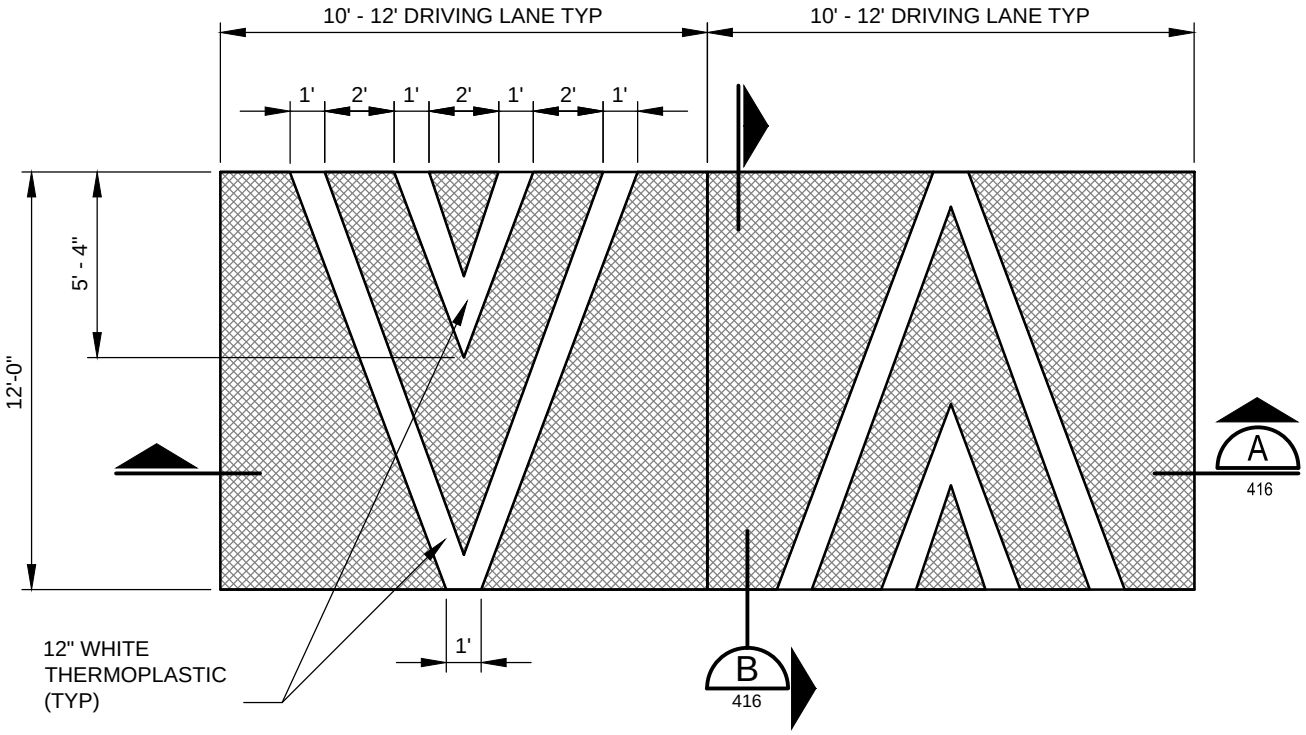

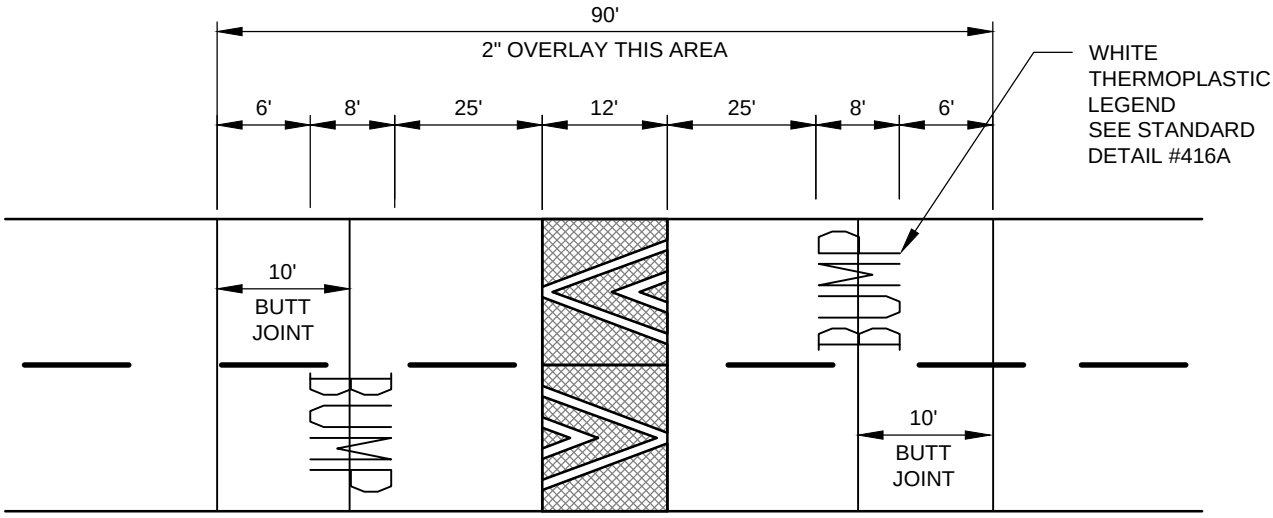

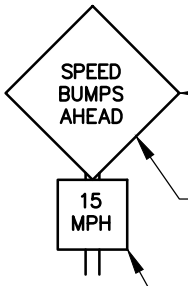

DISTANCE TO SIGN
100' - 250'
TO BE DETERMINED
IN THE FIELD BY THE
ENGINEER

USE SINGULAR "BUMP" ON SIGNS WHERE ONLY ONE SPEED HUMP IS INSTALLED. 30" X 30" BLACK ON YELLOW 4" LETTERING

W13-1, 18" X 18"

NOTES:

1. SIGNS & MARKINGS TYPICAL BOTH DIRECTIONS.
2. SEE "POST MOUNTED SIGN" STANDARD DRAWING 426C OR 426D.
3. A TEMPLATE MUST BE USED IN SHAPING SPEED HUMPS.
4. SPEED HUMPS MUST BE MADE IN TWO LIFTS.
5. 2" OVERLAY NOT REQUIRED FOR NEW PAVEMENT OR EXISTING PAVEMENT DETERMINED TO BE IN GOOD CONDITION BY THE ENGINEER.

Rob Crittenden

APPROVED BY: ROB CRITTENDEN
TRAFFIC OPERATIONS SAFETY AND ENGINEERING MANAGER

REVISION DATE: JULY 01, 2015

CityofRedmond
WASHINGTON

STANDARD DETAILS

SPEED HUMP
(1 OF 2)

FILE NAME: SD415.DWG

DETAIL NUMBER: 415

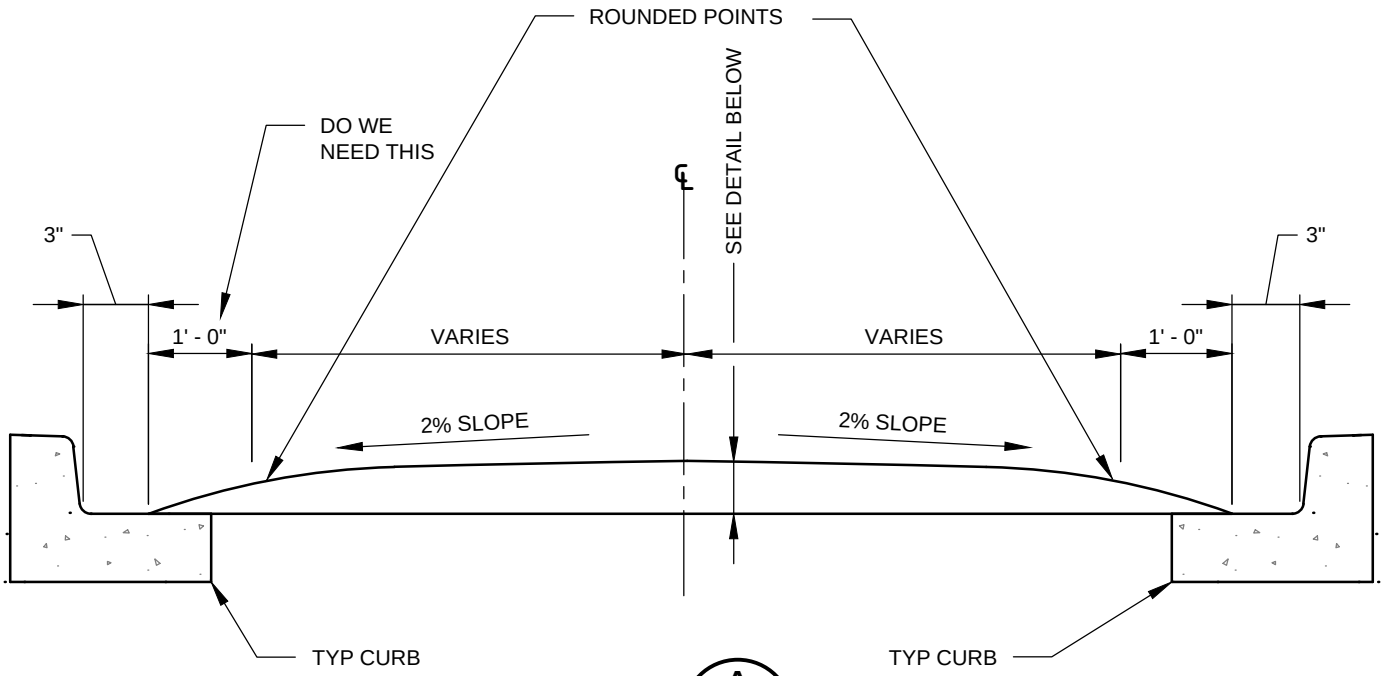

SECTION A
NTS 415

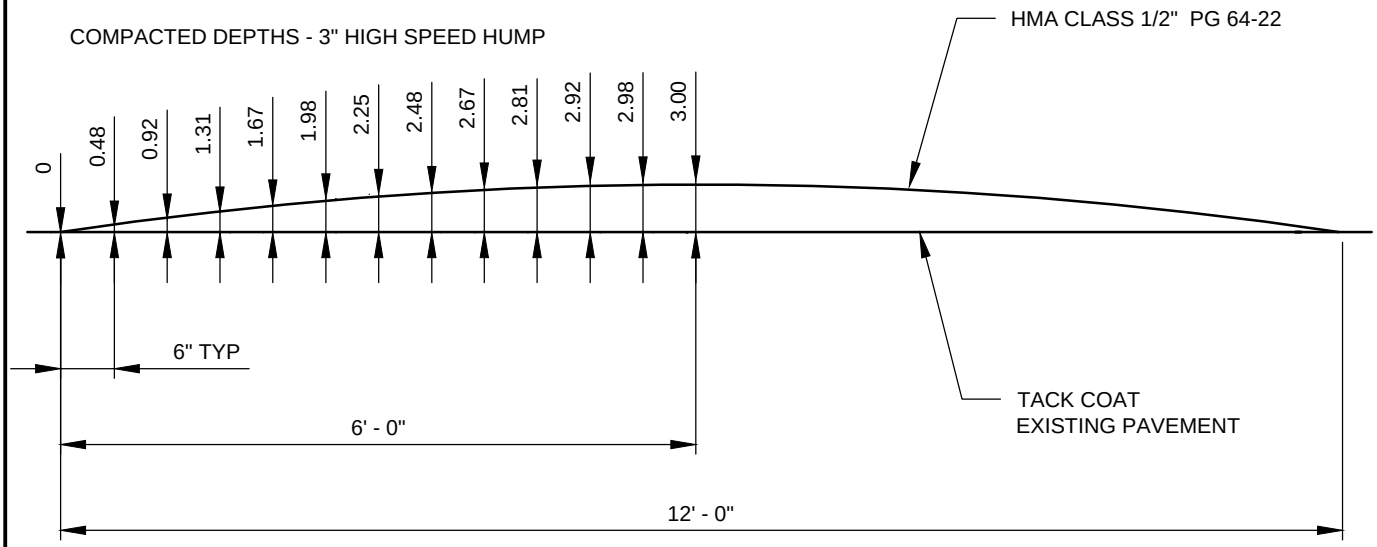

SECTION B
NTS 415

Rob Crittenden

APPROVED BY: ROB CRITTENDEN
TRAFFIC OPERATIONS SAFETY AND ENGINEERING MANAGER

REVISION DATE: JULY 01, 2015

CityofRedmond WASHINGTON

STANDARD DETAILS

SPEED HUMP
(2 OF 2)

FILE NAME: SD416.DWG

DETAIL NUMBER: 416

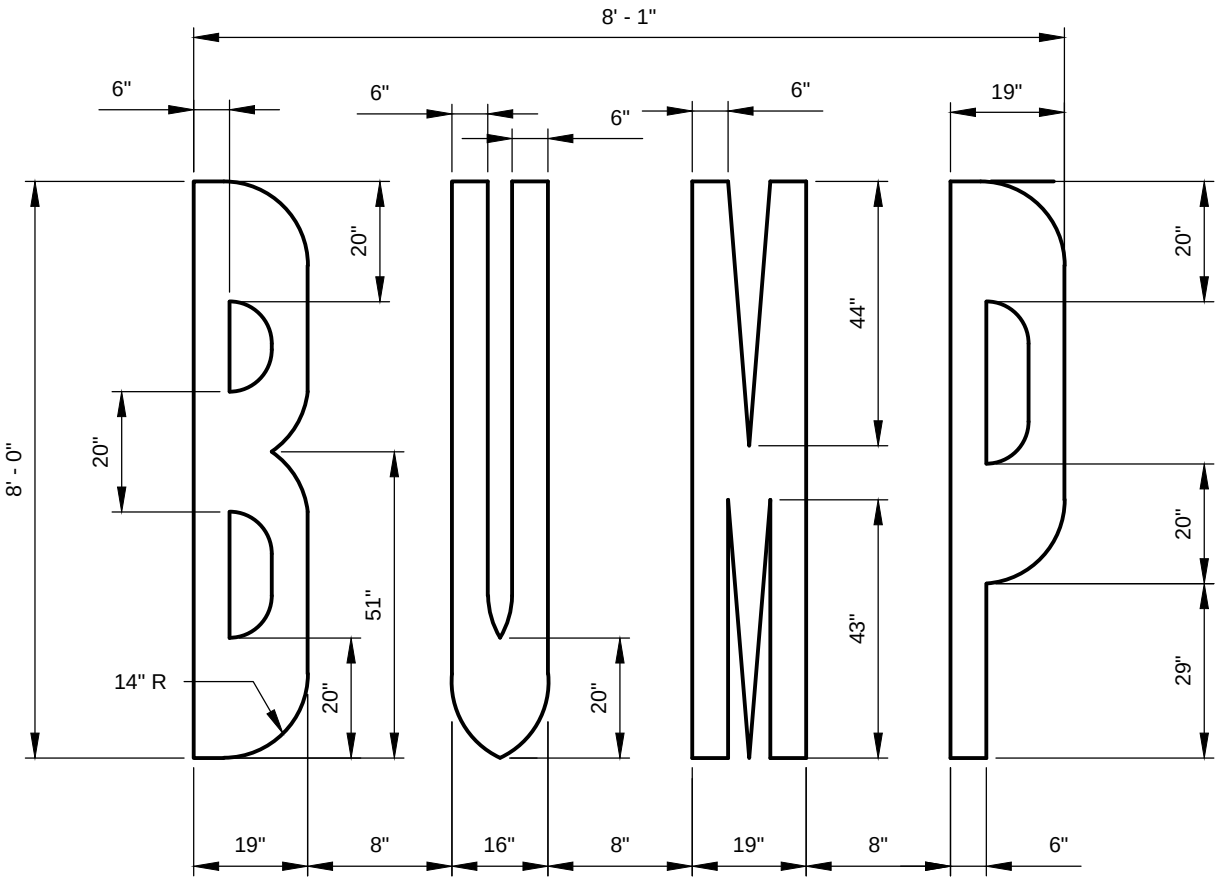

BUMP LEGEND

NTS

Rob Crittenden

APPROVED BY: ROB CRITTENDEN
TRAFFIC OPERATIONS SAFETY AND ENGINEERING MANAGER

REVISION DATE: JULY 01, 2015

CityofRedmond WASHINGTON

STANDARD DETAILS

BUMP LEGEND

FILE NAME: SD416A.DWG

DETAIL NUMBER: 416A

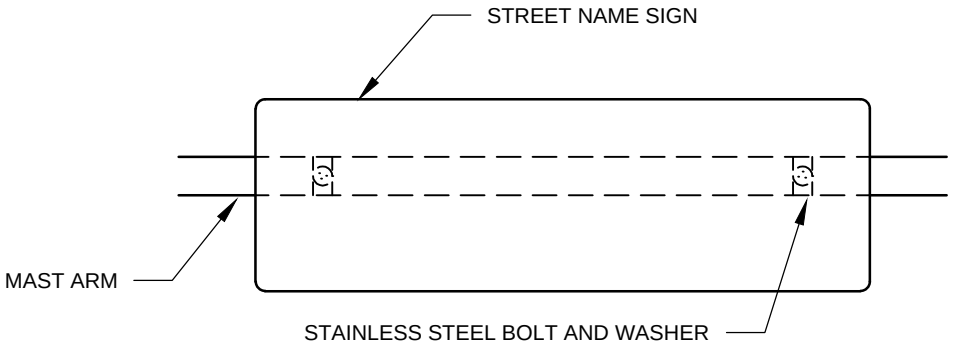

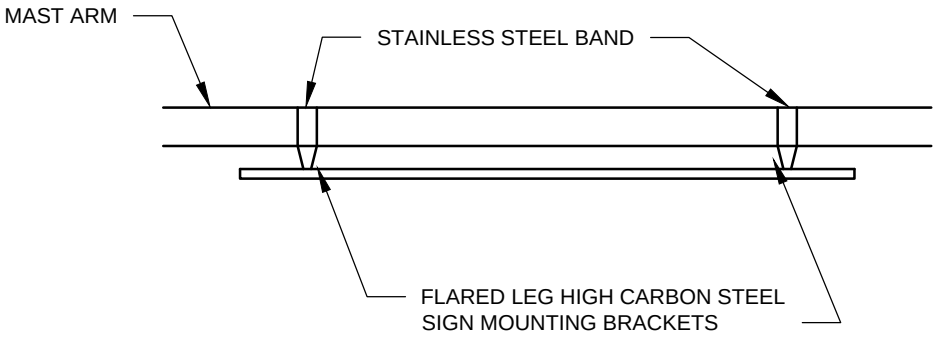

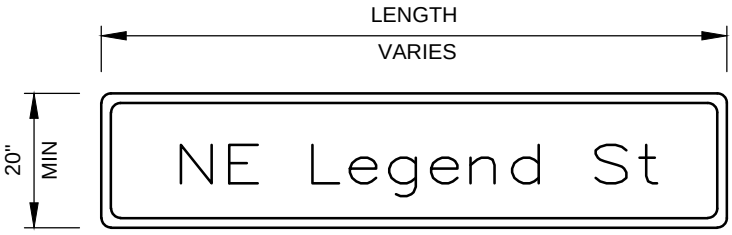

NOTES:

1. SUBMIT LAYOUT PROOF FOR APPROVAL BY THE TRAFFIC OPERATIONS STAFF.
2. BAND BRACKET AND SIGN TO MAST ARM USING 3/4 INCH WIDE X 0.045 INCH THICK STRENGTH STAINLESS STEEL BAND. SIGN MUST BE LEVEL.
3. WHITE SIGN LETTERS ON GREEN. USE 3M DIAMOND GRADE DG³. MUST BE LEVEL GRADE SHEETING AND LETTERS.
4. AIM VERTICAL ANGLE CONSISTENT WITH SIGNAL DISPLAY.

	H	NUMERALS & LETTERS *
UPPER CASE	24"	12" SIZE, D-SERIES
LOWER CASE	42"	9" SIZE, D-SERIES

MATERIALS:
ALUMINUM 0.100 INCH THICK STOCK WITH ROUNDED CORNERS.

DIMENSIONS:
PROVIDE LETTER SPACING, TEXT MARGINS, SIGN BORDERS AND CORNER RADII PER WSDOT SIGN FABRICATION MANUAL.

Rob Crittenden
APPROVED BY: ROB CRITTENDEN
TRAFFIC OPERATIONS SAFETY AND ENGINEERING MANAGER

REVISION DATE: JULY 01, 2015

CityofRedmond WASHINGTON

STANDARD DETAILS

MAST ARM
STREET NAME SIGNS

FILE NAME: SD417.DWG

DETAIL NUMBER: 417

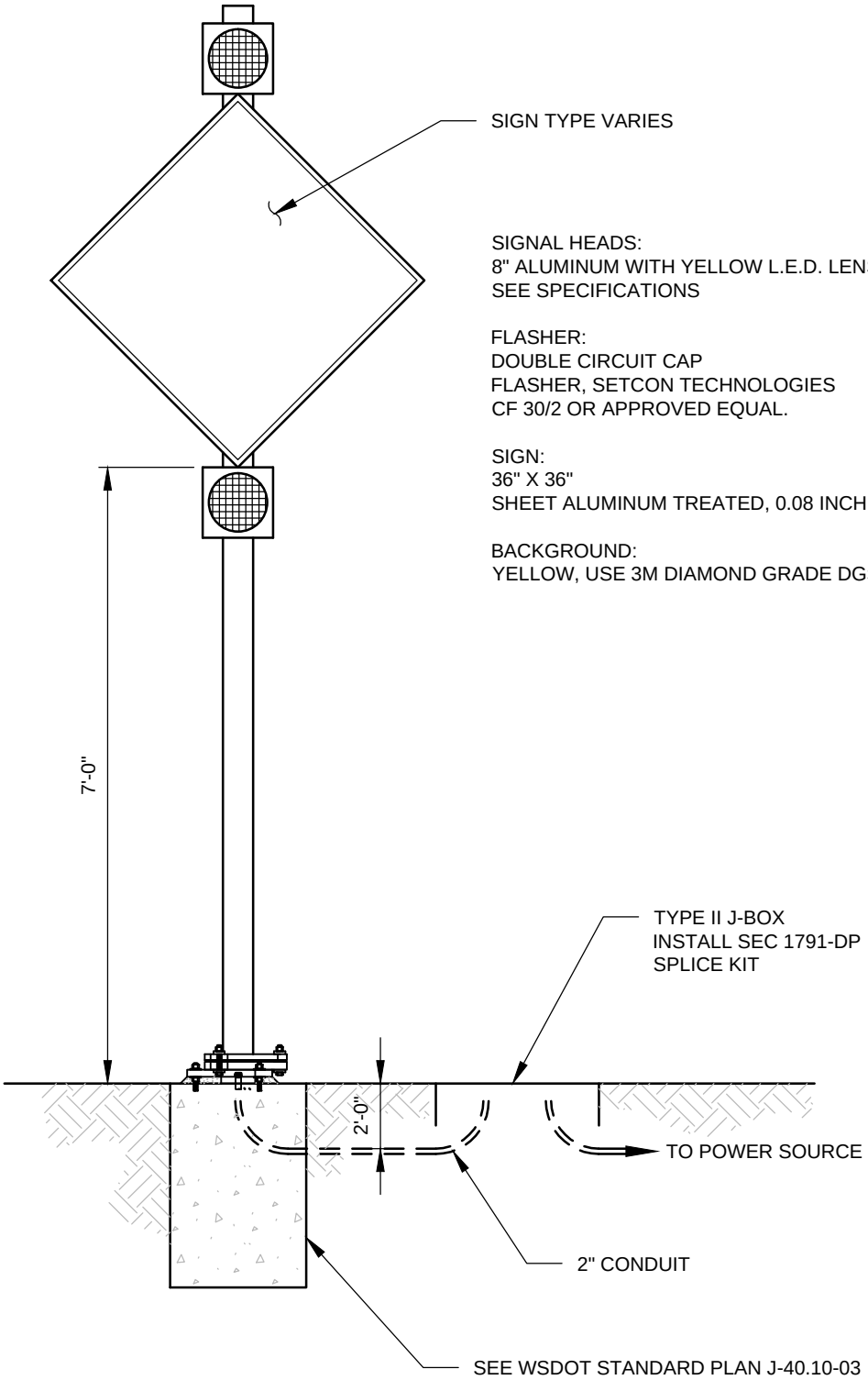

SIGNAL HEADS:
8" ALUMINUM WITH YELLOW L.E.D. LENS.
SEE SPECIFICATIONS

FLASHER:
DOUBLE CIRCUIT CAP
FLASHER, SETCON TECHNOLOGIES
CF 30/2 OR APPROVED EQUAL.

SIGN:
36" X 36"
SHEET ALUMINUM TREATED, 0.08 INCH THICK.

BACKGROUND:
YELLOW, USE 3M DIAMOND GRADE DG3 SHEETING

Rob Crittenden

APPROVED BY: ROB CRITTENDEN
TRAFFIC OPERATIONS SAFETY AND ENGINEERING MANAGER

REVISION DATE: JULY 01, 2015

CityofRedmond
WASHINGTON

STANDARD DETAILS

ADVANCE WARNING
SIGN/FLASHER

FILE NAME: SD418.DWG

DETAIL NUMBER: 418

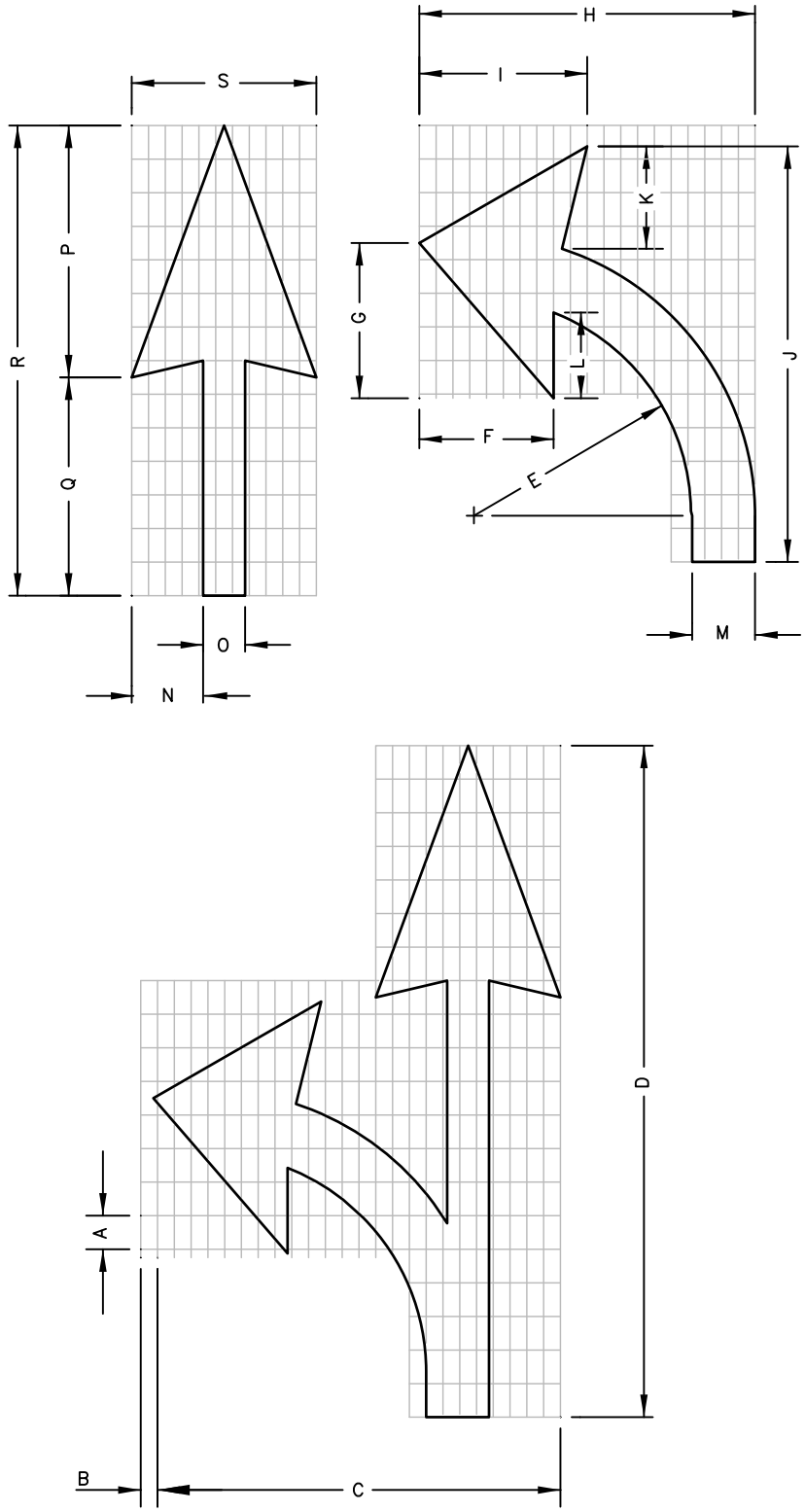

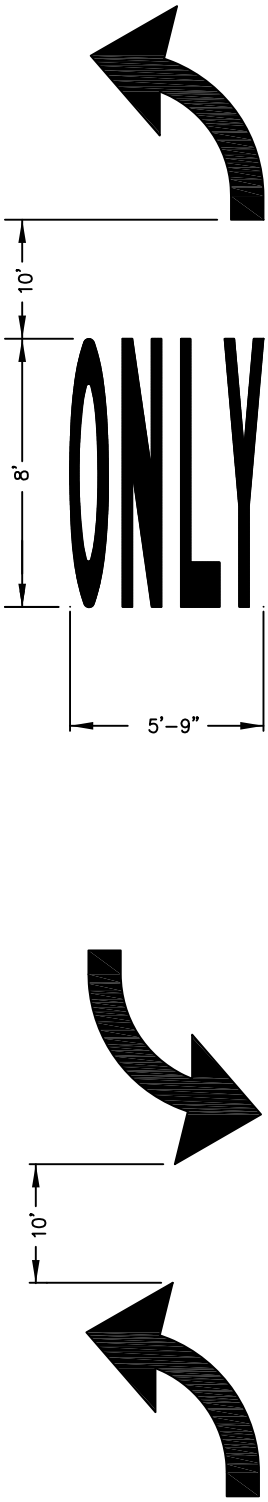

A	B	C	D	E	F	G	H	I	J	K	L	M	N	O	P	Q	R	S
8"	4"	8'–0"	13'–4"	4'–4"	2'–8"	3'–1"	6'–7"	3'–4"	8'–3"	1' – 11"	1'–8"	1'–3"	1'–5"	10"	5'–0"	4'–4"	9'–4"	3'–8"

NOTE:

USE THERMOPLASTIC UNLESS DIRECTED OTHERWISE BY CITY TRAFFIC ENGINEER

Rob Crittenden

APPROVED BY: ROB CRITTENDEN
TRAFFIC OPERATIONS SAFETY AND ENGINEERING MANAGER

REVISION DATE: JULY 01, 2014

CityofRedmond WASHINGTON

STANDARD DETAILS

LANE-USE PAVEMENT MARKINGS

FILE NAME: SD419.DWG

DETAIL NUMBER: **419**

CATALOG NUMBER	MOUNTING HT.	POLE HT.	BUTT SECTION	NOMINAL WT (LBS)
MBQ - 11	35' - 5"	36' - 1"	9 7/16"	1880

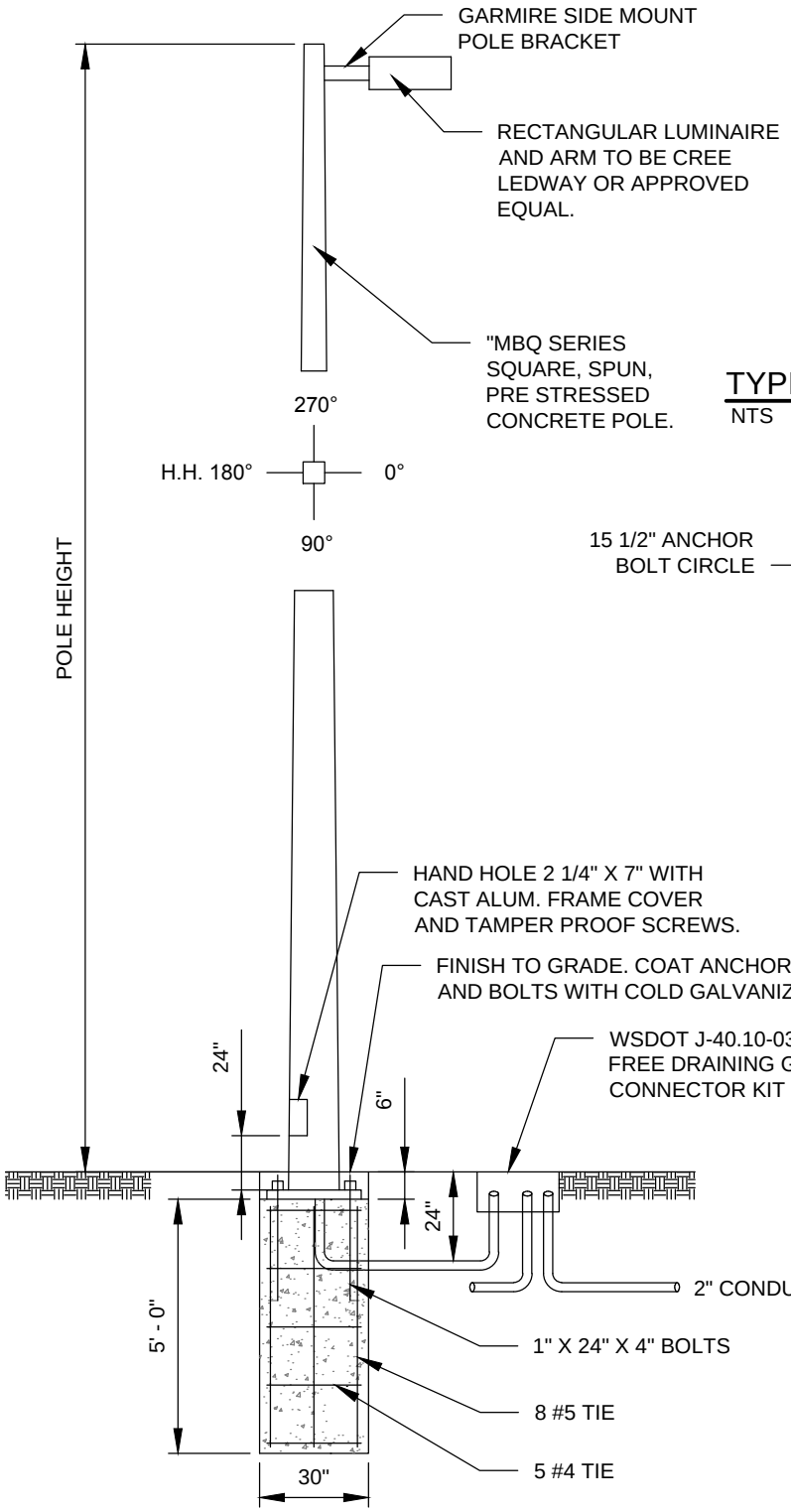

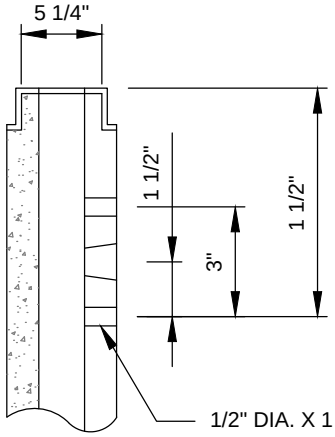

TYPICAL SIDE MOUNT DETAIL

NTS

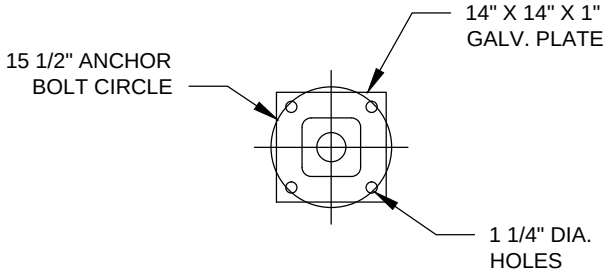

BASE PLATE

NTS

NOTES:

POLE FINISH - #113 GRAY CEMENT NATURAL EXPOSED FINISH.

Rob Crittenden

APPROVED BY: ROB CRITTENDEN
TRAFFIC OPERATIONS SAFETY AND ENGINEERING MANAGER

REVISION DATE: JULY 01, 2015

CityofRedmond WASHINGTON

STANDARD DETAILS

LUMINARE POLE (CONCRETE SQUARE)

FILE NAME: SD420.DWG

DETAIL NUMBER: 420

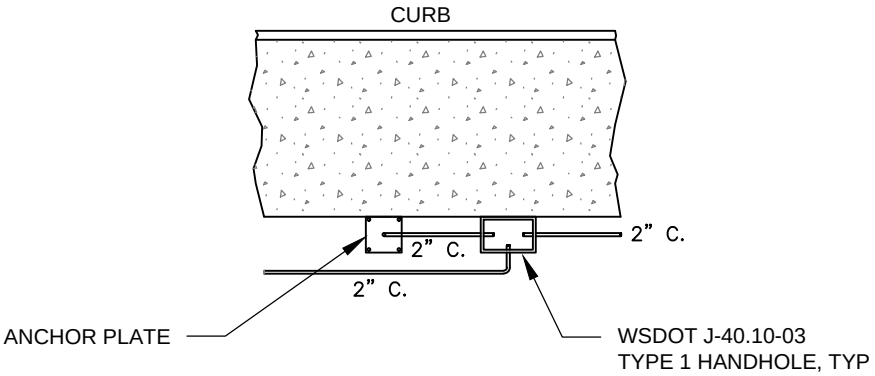

SIDEWALK

NTS

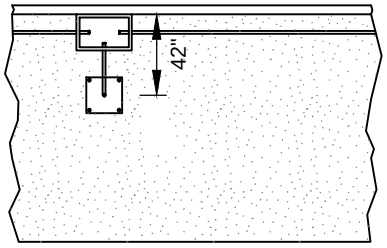

NO SIDEWALK

NTS

Rob Crittenden

APPROVED BY: ROB CRITTENDEN
TRAFFIC OPERATIONS SAFETY AND ENGINEERING MANAGER

REVISION DATE: JULY 01, 2015

CityofRedmond
WASHINGTON

STANDARD DETAILS

TYPICAL LUMINARE LOCATIONS

FILE NAME: SD420A.DWG

DETAIL NUMBER: 420A

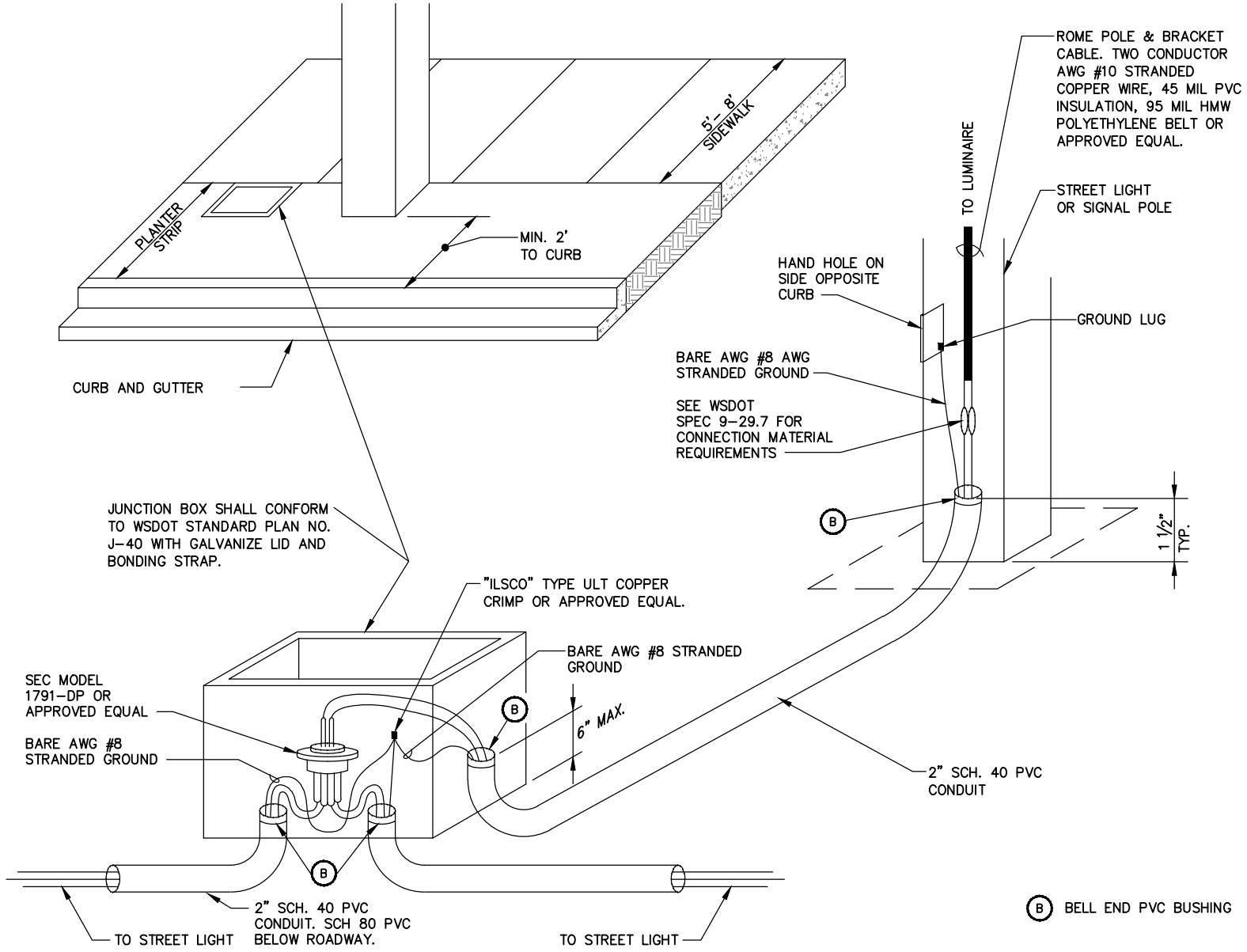

NOTES:
1. ALL ELECTRICAL SPLICES MUST MEET WET RATING.
2. BOND FRAME AND LID.
3. SPLICE KIT REQUIRED FOR LAST LIGHT ON A CIRCUIT.
4. SPLICE BOX (SEC 0791–0) REQUIRED TO BRANCH CIRCUIT IN THREE OR MORE DIRECTIONS.

Rob Crittenden

APPROVED BY: ROB CRITTENDEN
TRAFFIC OPERATIONS SAFETY AND ENGINEERING MANAGER

REVISION DATE: JULY 01, 2015

City of Redmond WASHINGTON

STANDARD DETAILS

UNIFORM LUMINAIRE WIRING

FILE NAME: SD421.DWG

DETAIL NUMBER: 421

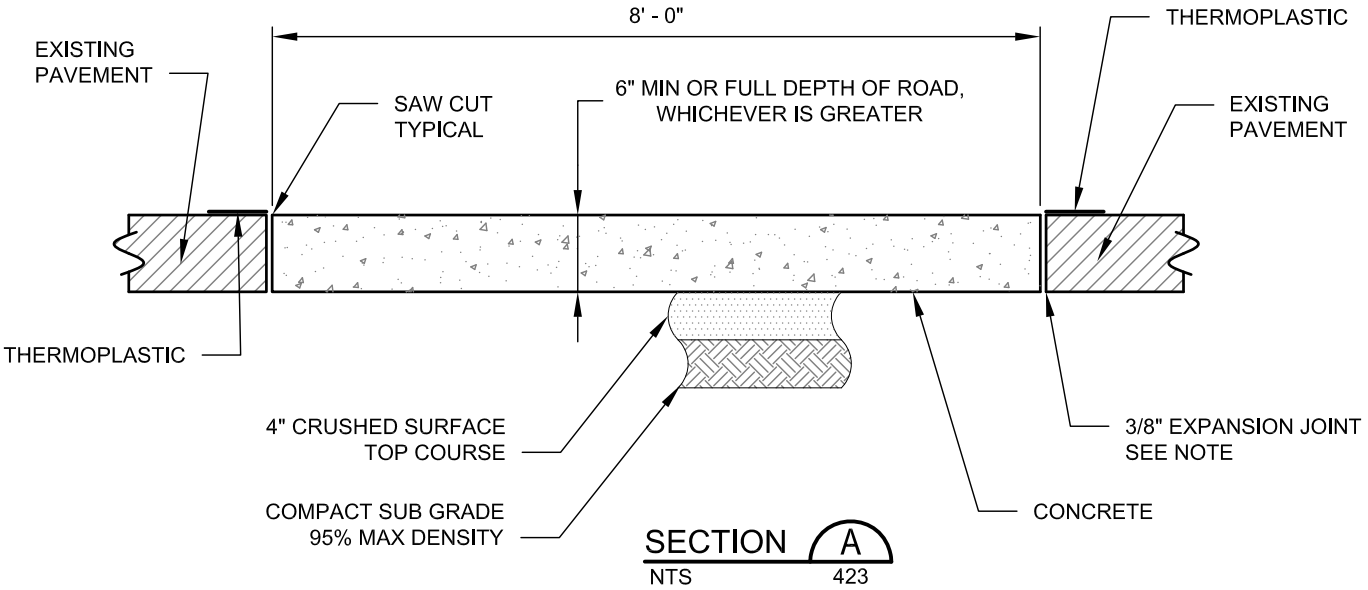

SECTION A
NTS 423

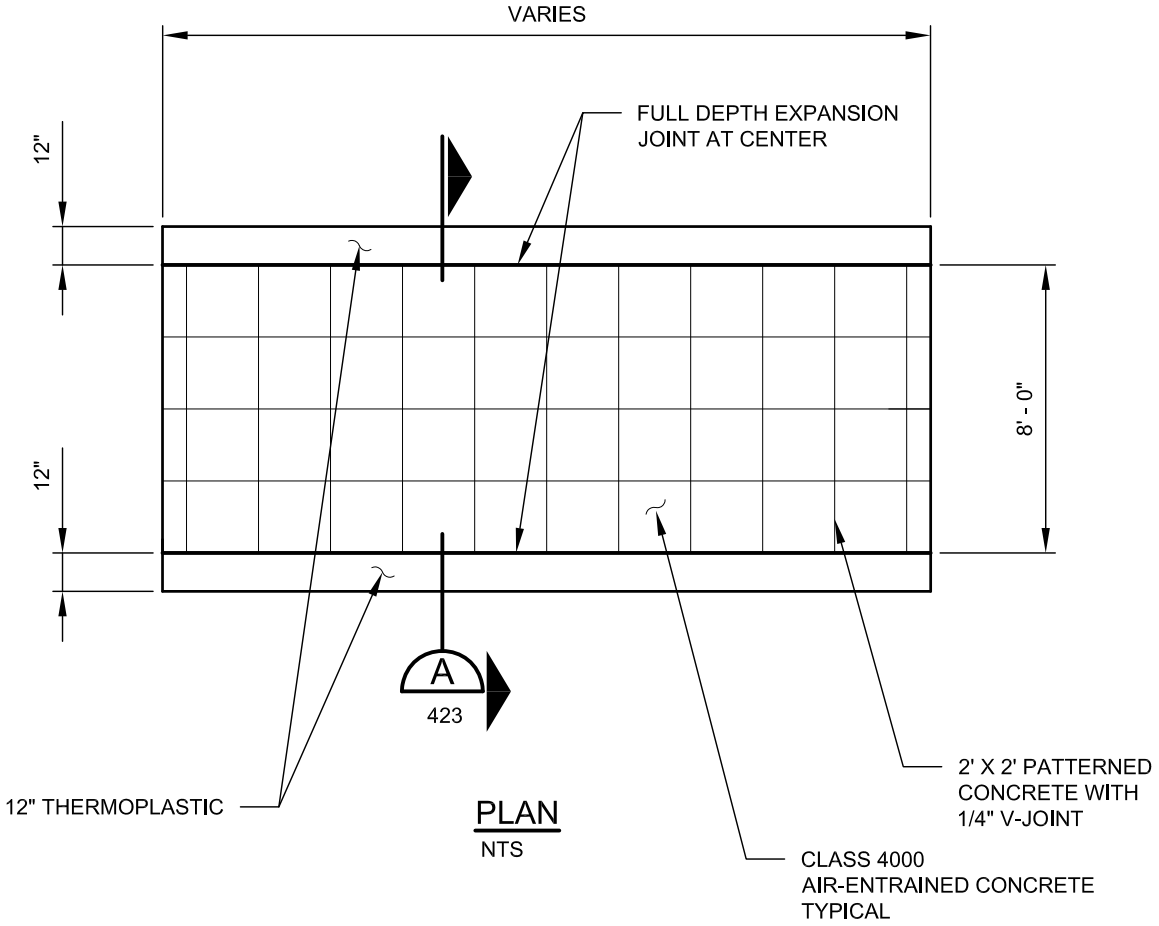

PLAN
NTS

NOTE:

EXPANSION JOINT FULL DEPTH WHEN WALK IS ADJACENT TO AN EXISTING CONCRETE SHEET.

Paulette Norman APPROVED BY: PAULETTE NORMAN DEVELOPMENT ENGINEERING MANAGER	CityofRedmond WASHINGTON	STANDARD DETAILS **PATTERNED CONCRETE CROSSWALK**
REVISION DATE: JULY 01, 2014		FILE NAME: SD423.DWG — DETAIL NUMBER: **423**

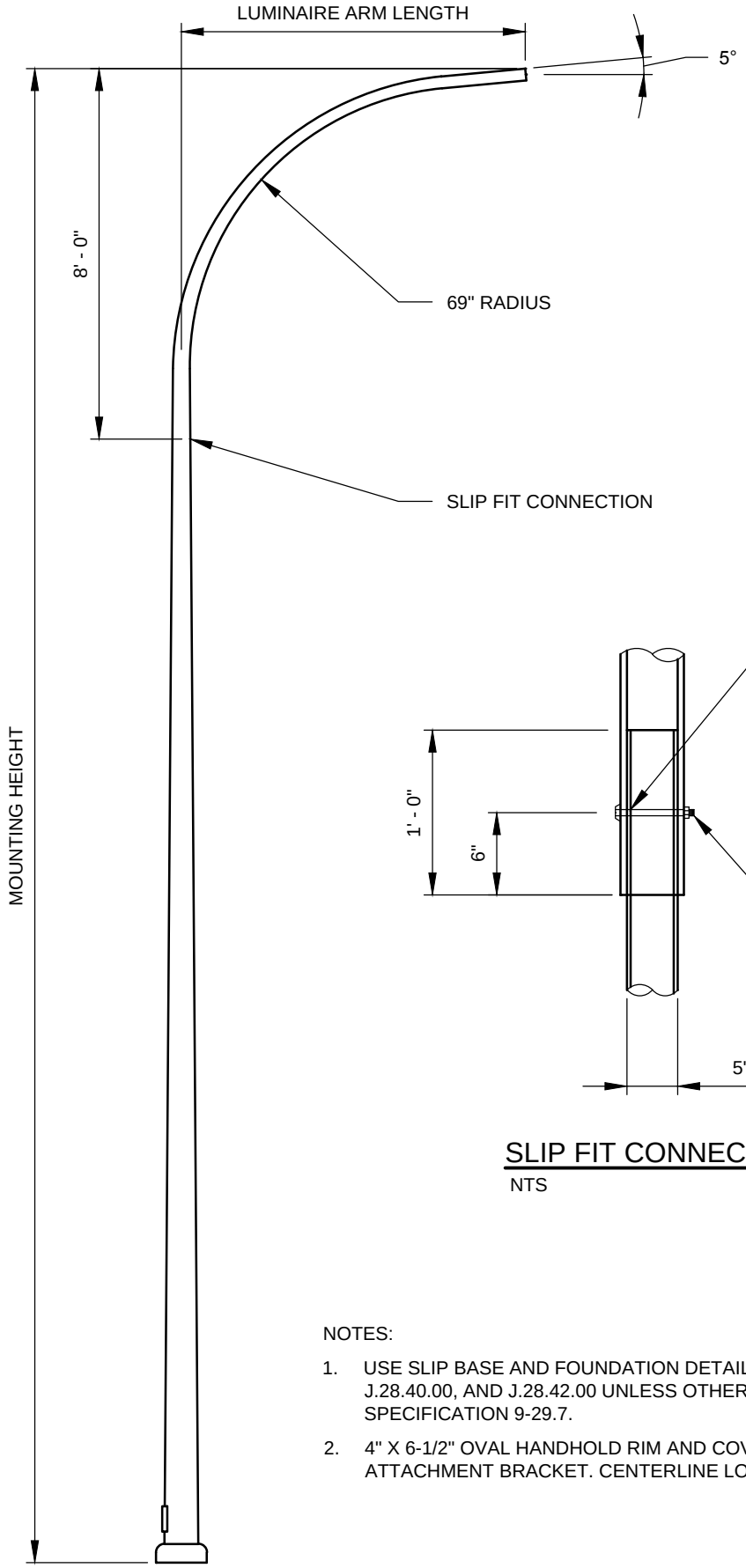

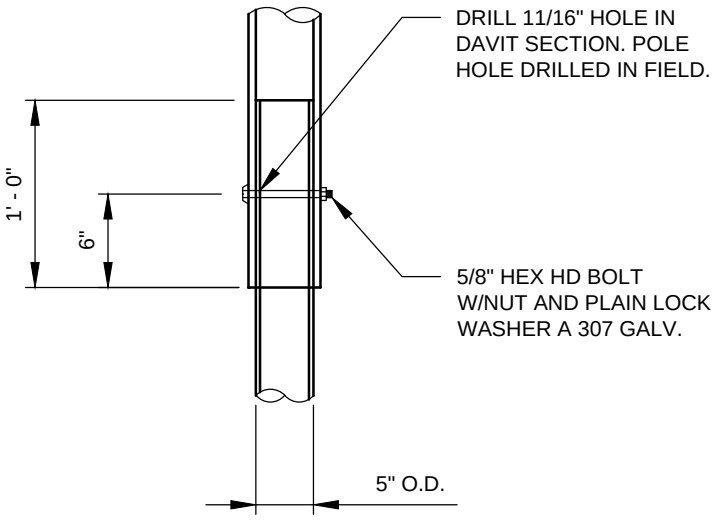

SLIP FIT CONNECTION

NTS

NOTES:

1. USE SLIP BASE AND FOUNDATION DETAIL PER WSDOT STD. PLANS J.28.30-00, J.28.40.00, AND J.28.42.00 UNLESS OTHERWISE SPECIFIED. SEE WSDOT STD SPECIFICATION 9-29.7.
2. 4" X 6-1/2" OVAL HANDHOLD RIM AND COVER WITH GROUND AND CONDUCTOR ATTACHMENT BRACKET. CENTERLINE LOCATED AT 11" ABOVE POLE BASE.

Rob Crittenden

APPROVED BY: ROB CRITTENDEN
TRAFFIC OPERATIONS SAFETY AND ENGINEERING MANAGER

REVISION DATE: JULY 01, 2015

CityofRedmond WASHINGTON

STANDARD DETAILS

"J" SERIES
LIGHT STANDARD

FILE NAME: SD425.DWG

DETAIL NUMBER: 425

SIGN FABRICATION DETAIL

NTS

MUTCD TABLE 2D-2. MINIMUM LETTER HEIGHTS ON STREET NAME SIGNS

			MINIMUM LETTER HEIGHT		BLADE SIZE	
TYPE OF MOUNTING	TYPE OF STREET	SPEED LIMIT	INITIAL UPPER CASE	LOWER CASE	MIN	MAX
OVERHEAD	ALL TYPES	ALL SPEED LIMITS	12 INCHES	9 INCHES	18" HT.	18" HT.
POST-MOUNTED	MULTI-LANE	MORE THAN 40 MPH	8 INCHES	6 INCHES	10" X 36"	10" X 48"
POST-MOUNTED	MULTI-LANE	40 MPH OR LESS	6 INCHES	4.5 INCHES	8" X 30"	8" X 36"
POST-MOUNTED	2-LANE	ALL SPEED LIMITS	6 INCHES*	4.5 INCHES*	8" X 30"	8" X 36"

* ON LOCAL TWO-LANE STREETS WITH SPEED LIMITS OF 25 MPH OR LESS, 4 INCH INITIAL UPPER-CASE LETTERS WITH 3 INCH LOWER CASE LETTERS MAY BE USED.

NOTES:

1. LETTERS SHALL BE HIGHWAY B SERIES FONT.
2. SIGN CORNERS SHALL BE ROUNDED.
3. FOR INTERSECTIONS THAT HAVE DIFFERING SPEEDS, THE HIGHEST SPEED SHALL DICTATE THE SIZE OF ALL STREET NAME SIGNS.
4. SIGN MATERIAL SHALL BE 0.080 INCH THICK STOCK ALUMINUM WITH WHITE SIGN LETTERS ON GREEN.
5. UNLESS OTHERWISE SPECIFIED, ALL SIGN SHEETING SHALL BE DG^3.

Rob Crittenden

APPROVED BY: ROB CRITTENDEN
TRAFFIC OPERATIONS SAFETY AND ENGINEERING MANAGER

REVISION DATE: JULY 01, 2015

CityofRedmond
WASHINGTON

STANDARD DETAILS

SIGN AND POST DETAIL

FILE NAME: SD426A.DWG

DETAIL NUMBER: 426A

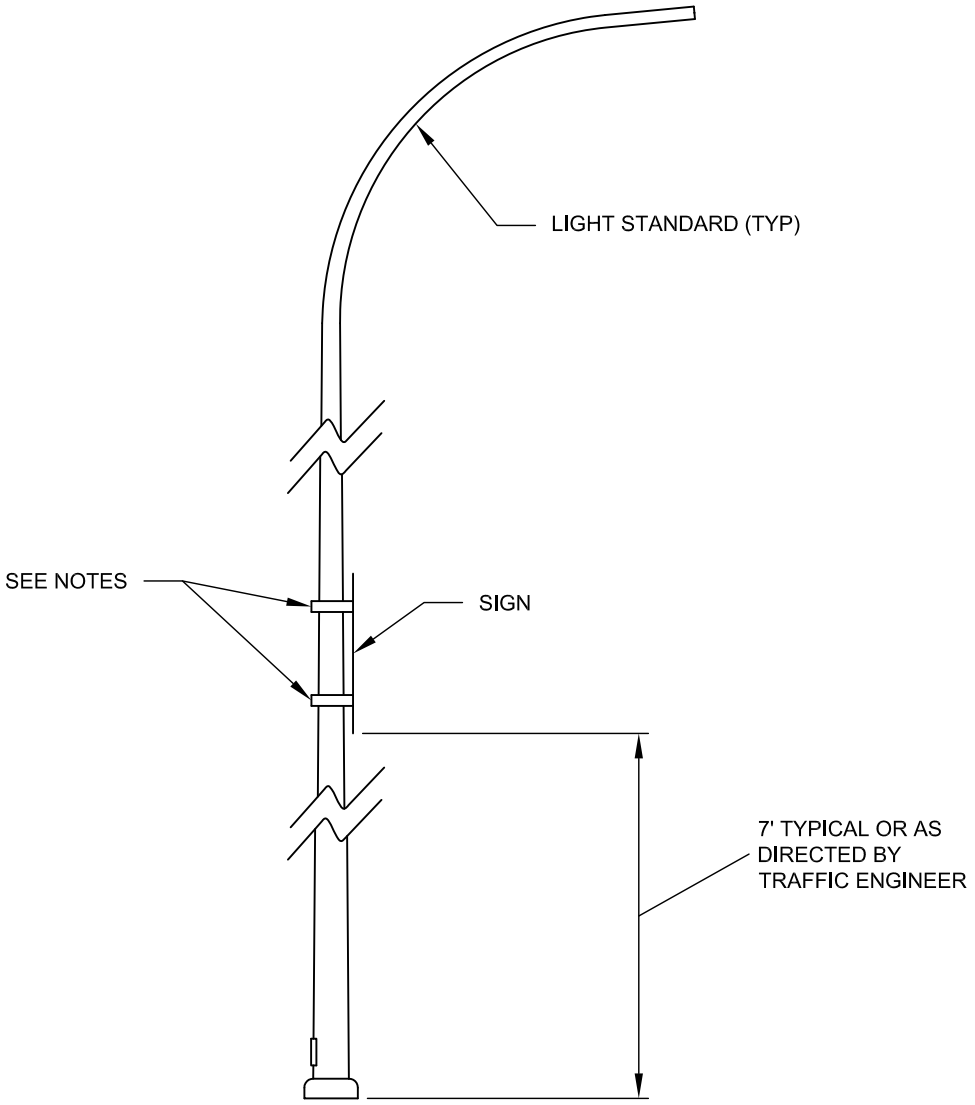

SIGN MOUNTING DETAIL

NTS

NOTES:

1. SIGN MOUNTED ON STREETLIGHTS SHALL BE BANDED (3/4" WIDE 0.30 THICKNESS STAINLESS STEEL BANDING WITH BANDING BUCKLES AND BOLT FLARED LEG BUCKLES).
2. ATTACH SIGN TO POST WITH 3/8" X 3" GALVANIZED BOLTS WITH WASHERS ON FRONT AND BACK.

Rob Crittenden

APPROVED BY: ROB CRITTENDEN
TRAFFIC OPERATIONS SAFETY AND ENGINEERING MANAGER

REVISION DATE: JULY 01, 2014

CityofRedmond
WASHINGTON

STANDARD DETAILS

STREET LIGHT POLE MOUNTING SIGN

FILE NAME: SD426B.DWG

DETAIL NUMBER: **426B**

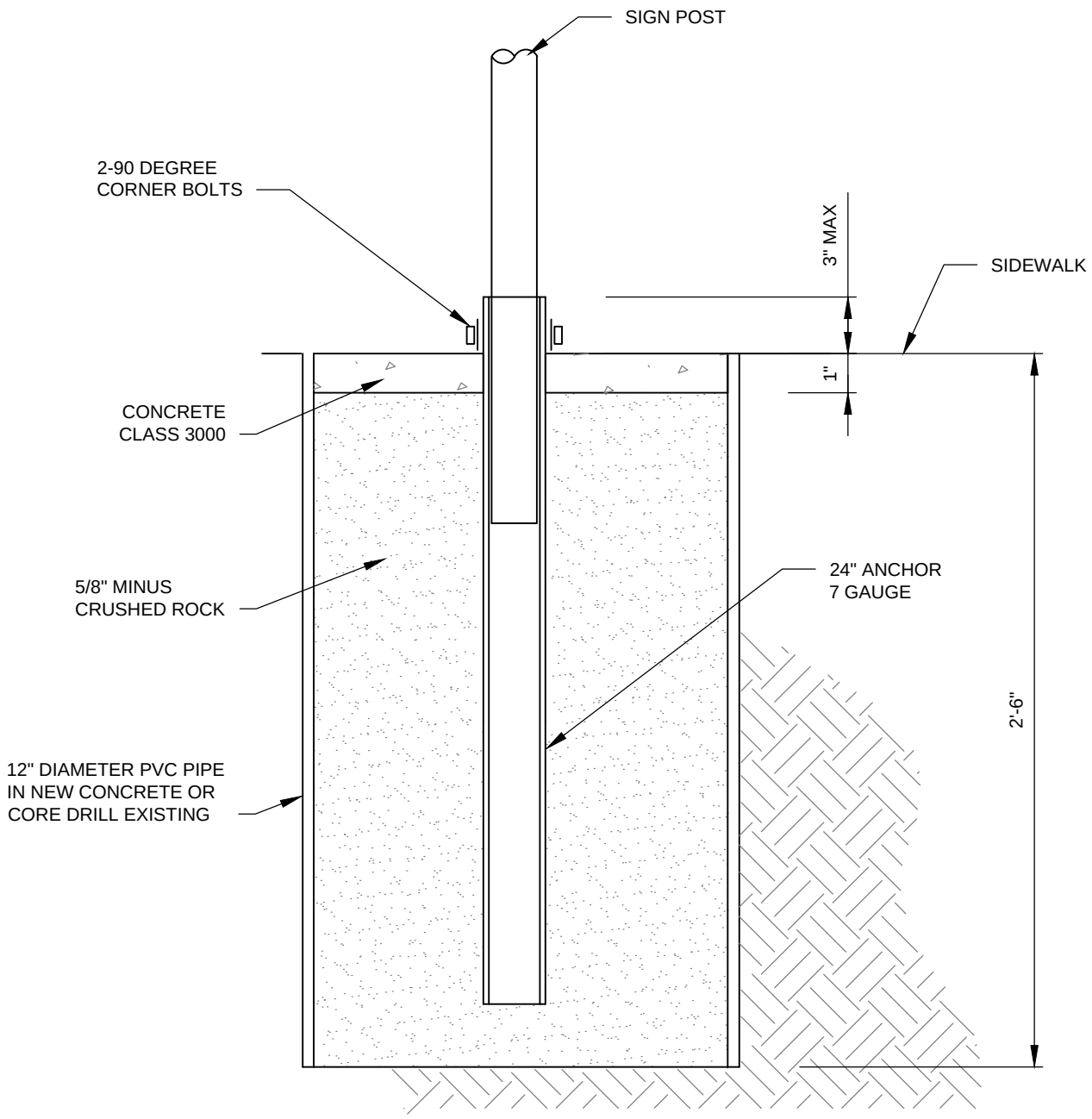

NOTES:

1. POST: 2" X 2" 14 GAUGE (0.83) QWIK PUNCH A.S.T.M. A570 WITH ANCHOR AND STIFFENER SLEEVE.
2. SIGN HEIGHT: FROM THE GROUND TO THE BOTTOM OF THE SIGN SHALL BE 7'-0" (TYPE PER MUTCD).
3. OFFSET LOCATION PER MUTCD. SIGN POST NOT TO EXTEND PAST TOP OF SIGN. ATTACH SIGN TO POST WITH 3/8" X 3" GALVANIZED BOLTS WITH WASHERS ON FRONT AND BACK.

Rob Crittenden

APPROVED BY: ROB CRITTENDEN
TRAFFIC OPERATIONS SAFETY AND ENGINEERING MANAGER

REVISION DATE: JULY 01, 2015

CityofRedmond
WASHINGTON

STANDARD DETAILS

SIGN POST IN
CONCRETE/ASPHALT

FILE NAME: SD426C.DWG

DETAIL NUMBER: 426C

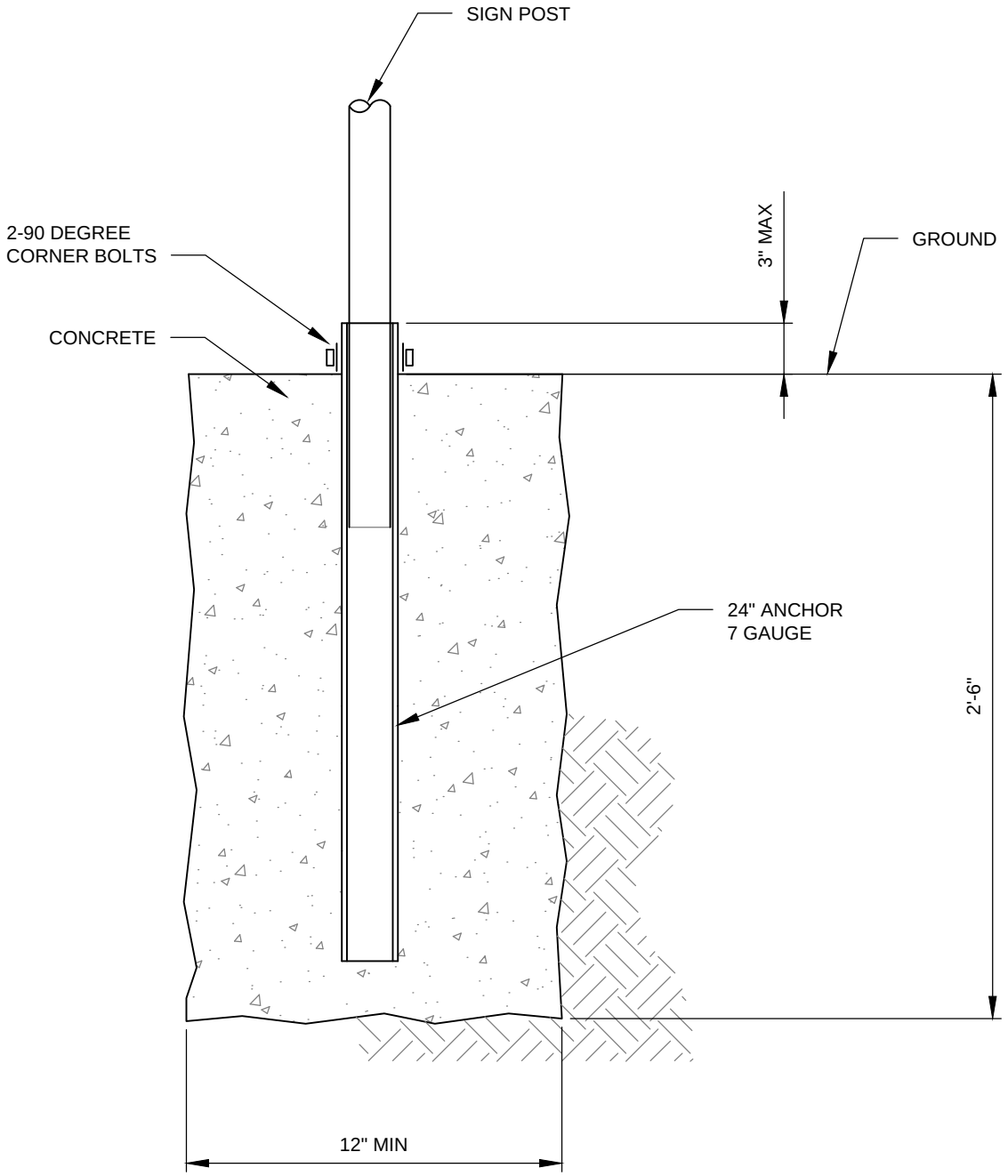

NOTES:

1. POSTS: 2"x2" 14 GAUGE (.083) QWIK PUNCH A.S.T.M. A570, WITH ANCHOR AND STIFFENER SLEEVE.

2. SIGN HEIGHT: FROM THE GROUND TO THE BOTTOM OF THE SIGN SHALL BE 7'-0" (TYP. PER MUTCD).

3. OFFSET LOCATION PER MUTCD: SIGN POST NOT TO EXTEND PAST TOP OF SIGN. ATTACH SIGN TO POST WITH 3/8"x3" GALVANIZED BOLTS WITH WASHERS ON FRONT AND BACK.

Rob Crittenden APPROVED BY: ROB CRITTENDEN TRAFFIC OPERATIONS SAFETY AND ENGINEERING MANAGER	CityofRedmond WASHINGTON	STANDARD DETAILS SIGN POST IN GROUND
REVISION DATE: JULY 01, 2015		FILE NAME: SD426D.DWG / DETAIL NUMBER: 426D

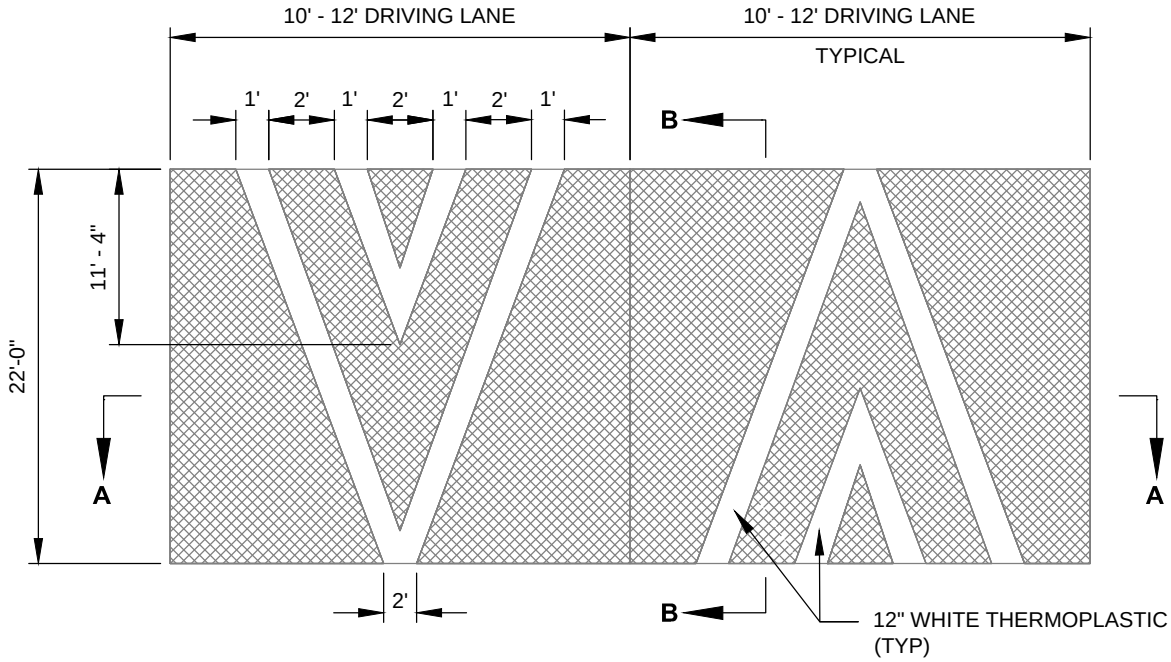

SPEED TABLE DETAIL (1 OF 2)

NTS

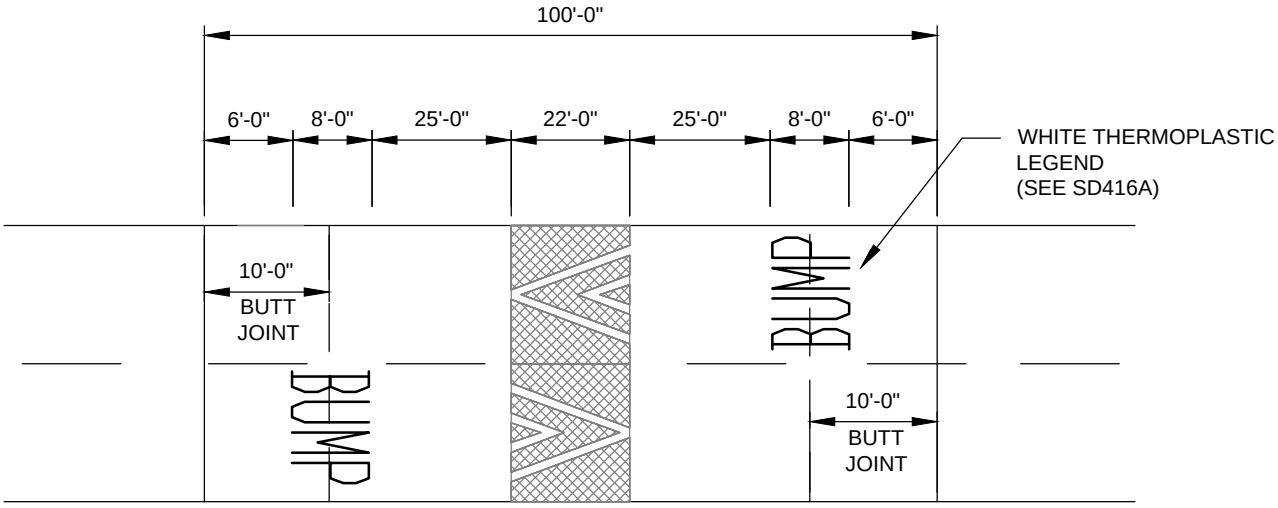

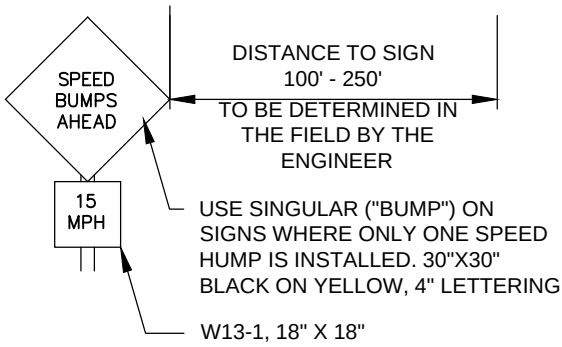

NOTES:

1. SIGNS & MARKINGS TYPICAL BOTH DIRECTIONS.
2. SEE "POST MOUNTED SIGN" STANDARD DRAWING.
3. A TEMPLATE MUST BE USED IN SHAPING SPEED TABLE.
4. 2" OVERLAY NOT REQUIRED FOR NEW PAVEMENT OR EXISTING PAVEMENT DETERMINED TO BE IN GOOD CONDITION BY THE ENGINEER.

Rob Crittenden APPROVED BY: ROB CRITTENDEN TRAFFIC OPERATIONS SAFETY AND ENGINEERING MANAGER	CityofRedmond WASHINGTON	STANDARD DETAILS SPEED TABLE (1 OF 2)
REVISION DATE: JULY 01, 2015		FILE NAME: SD427.DWG / DETAIL NUMBER: 427

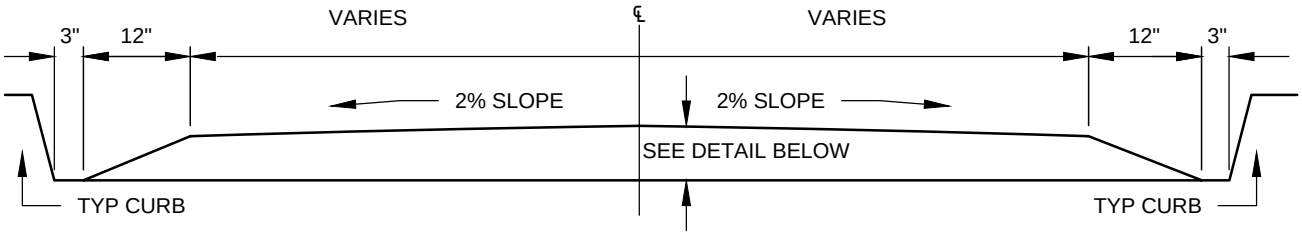

SPEED TABLE SECTION A-A

NTS

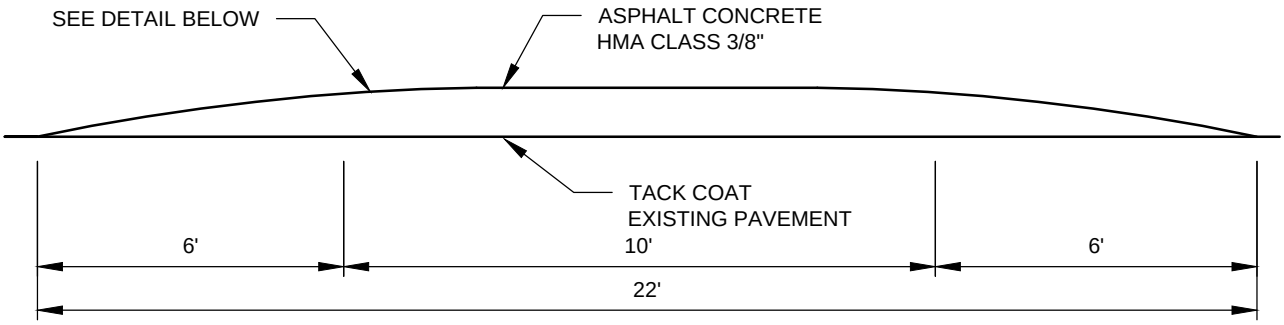

SPEED TABLE SECTION B-B

NTS

0	0.64	1.22	1.75	2.22	2.64	3.00	3.31	3.56	3.75	3.89	3.97	4.00"	← 4" SPEED TABLE
0	0.56	1.07	1.53	1.94	2.31	2.63	2.89	3.11	3.28	3.40	3.48	3.50"	← 3.5" SPPED TABLE
0	0.48	0.92	1.31	1.67	1.98	2.25	2.48	2.67	2.81	2.92	2.96	3.00"	← 3" SPEED TABLE

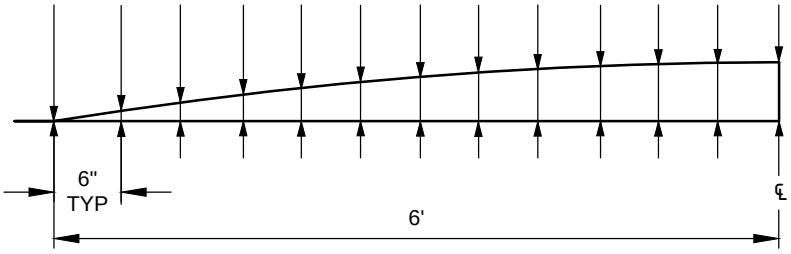

SPEED TABLE DETAIL (TYP)

NTS

Rob Crittenden

APPROVED BY: ROB CRITTENDEN
TRAFFIC OPERATIONS SAFETY AND ENGINEERING MANAGER

REVISION DATE: JULY 01, 2015

City of Redmond WASHINGTON

STANDARD DETAILS

SPEED TABLE (2 OF 2)

FILE NAME: SD428.DWG

DETAIL NUMBER: 428

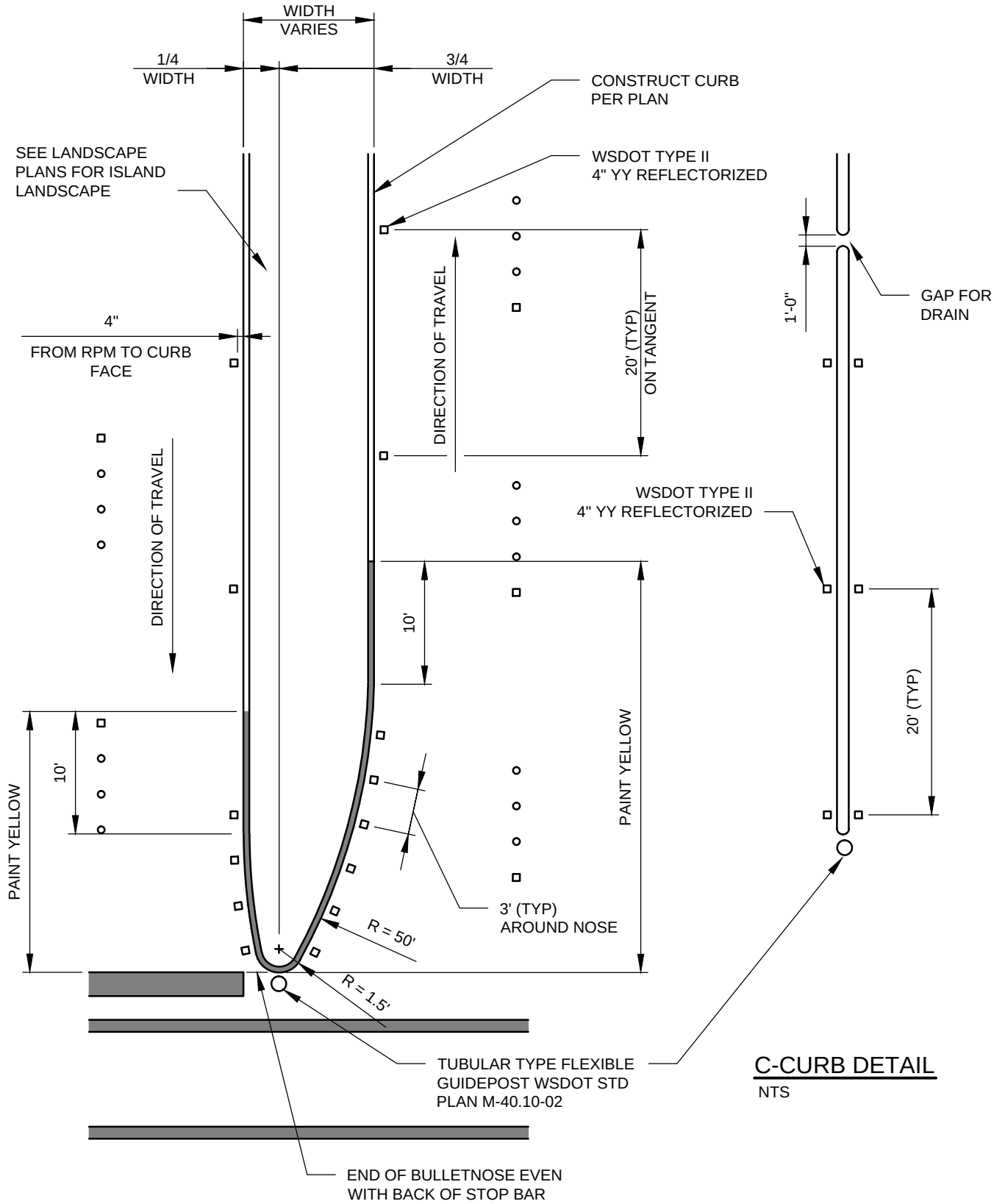

C-CURB DETAIL

NTS

OFFSET BULLETNOSE DETAIL

NTS

Rob Crittenden

APPROVED BY: ROB CRITTENDEN
TRAFFIC OPERATIONS SAFETY AND ENGINEERING MANAGER

REVISION DATE: JULY 01, 2015

CityofRedmond
WASHINGTON

STANDARD DETAILS

BULLETNOSE AND C-CURB DETAIL

FILE NAME: SD429.DWG

DETAIL NUMBER: 429

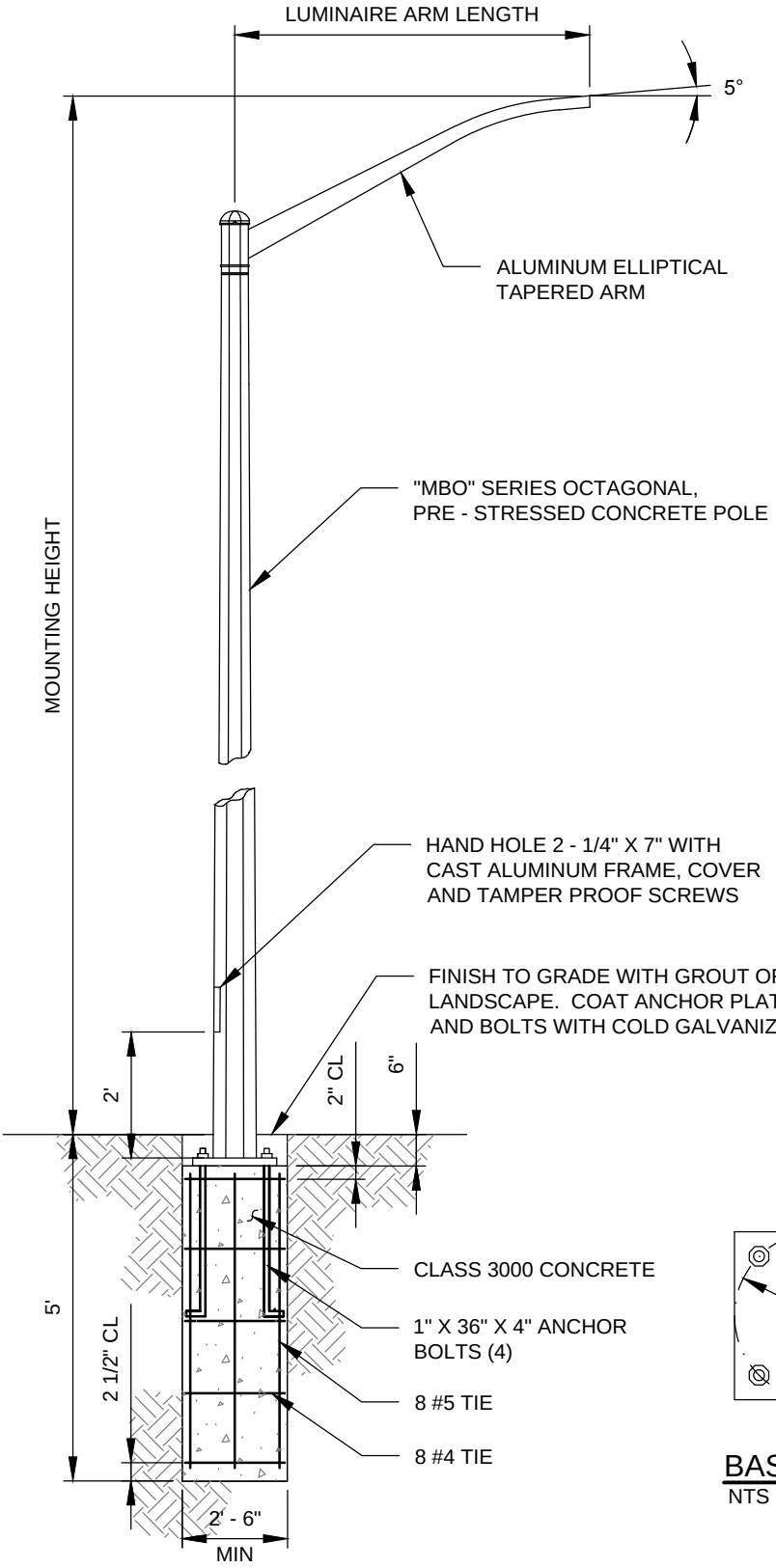

NOTES:

REFER TO REDMOND DETAIL 421 FOR

LUMINAIRE WIRING AND JUNCTION BOX

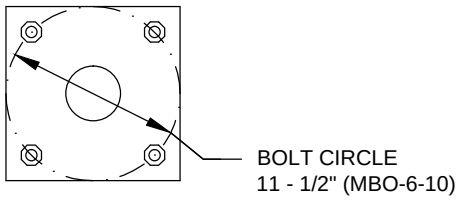

BASE PLATE

NTS

Rob Crittenden

APPROVED BY: ROB CRITTENDEN
TRAFFIC OPERATIONS SAFETY AND ENGINEERING MANAGER

REVISION DATE: JULY 01, 2015

CityofRedmond
WASHINGTON

STANDARD DETAILS

CONCRETE OCTAGONAL POLE

FILE NAME: SD430.DWG

DETAIL NUMBER: 430

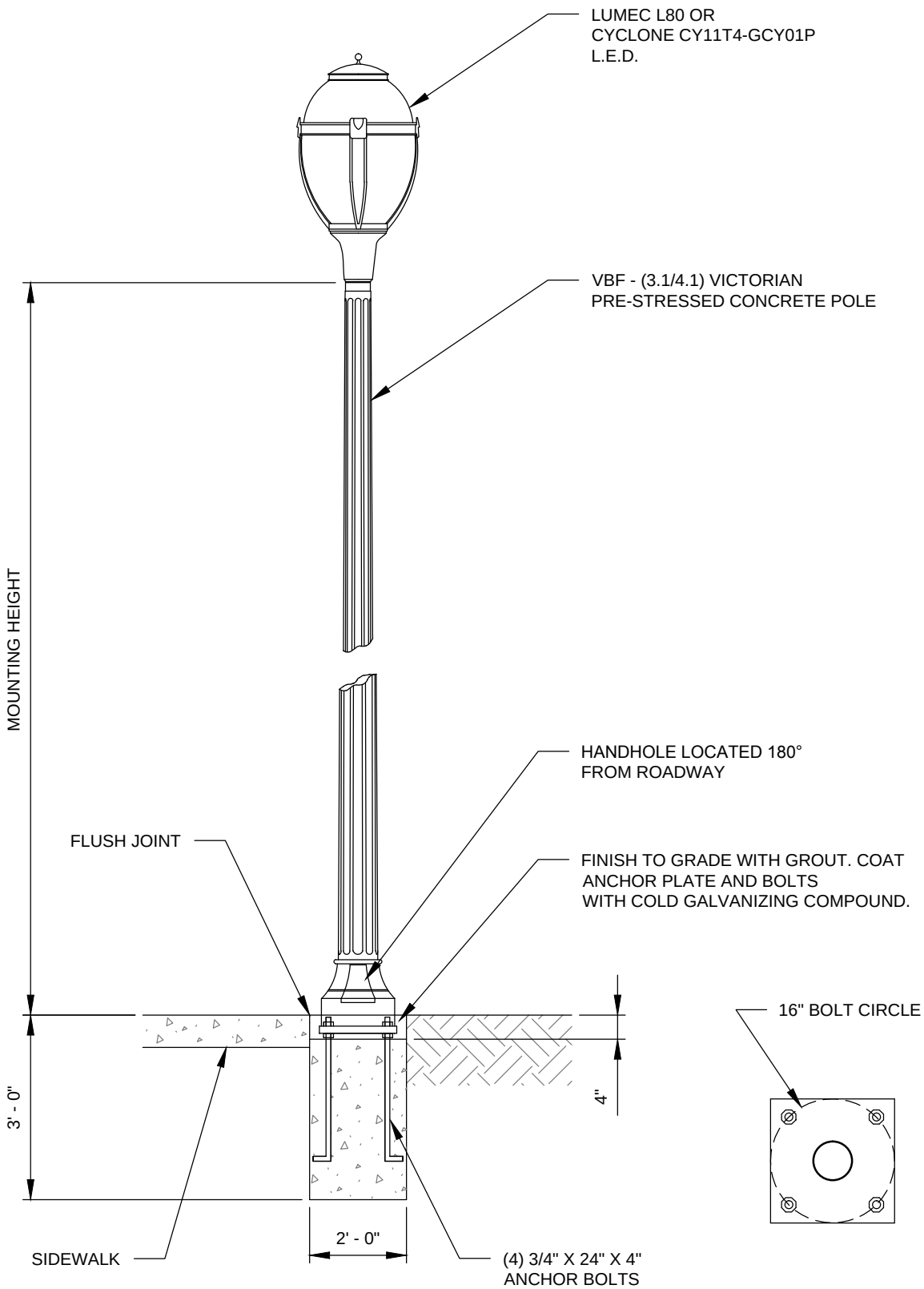

ELEVATION
NTS

BASE PLATE
NTS

Rob Crittenden

APPROVED BY: ROB CRITTENDEN
TRAFFIC OPERATIONS SAFETY AND ENGINEERING MANAGER

REVISION DATE: JULY 01, 2015

CityofRedmond
WASHINGTON

STANDARD DETAILS

CONCRETE PEDESTRIAN SCALE POLE

FILE NAME: SD430B.DWG

DETAIL NUMBER: 430B

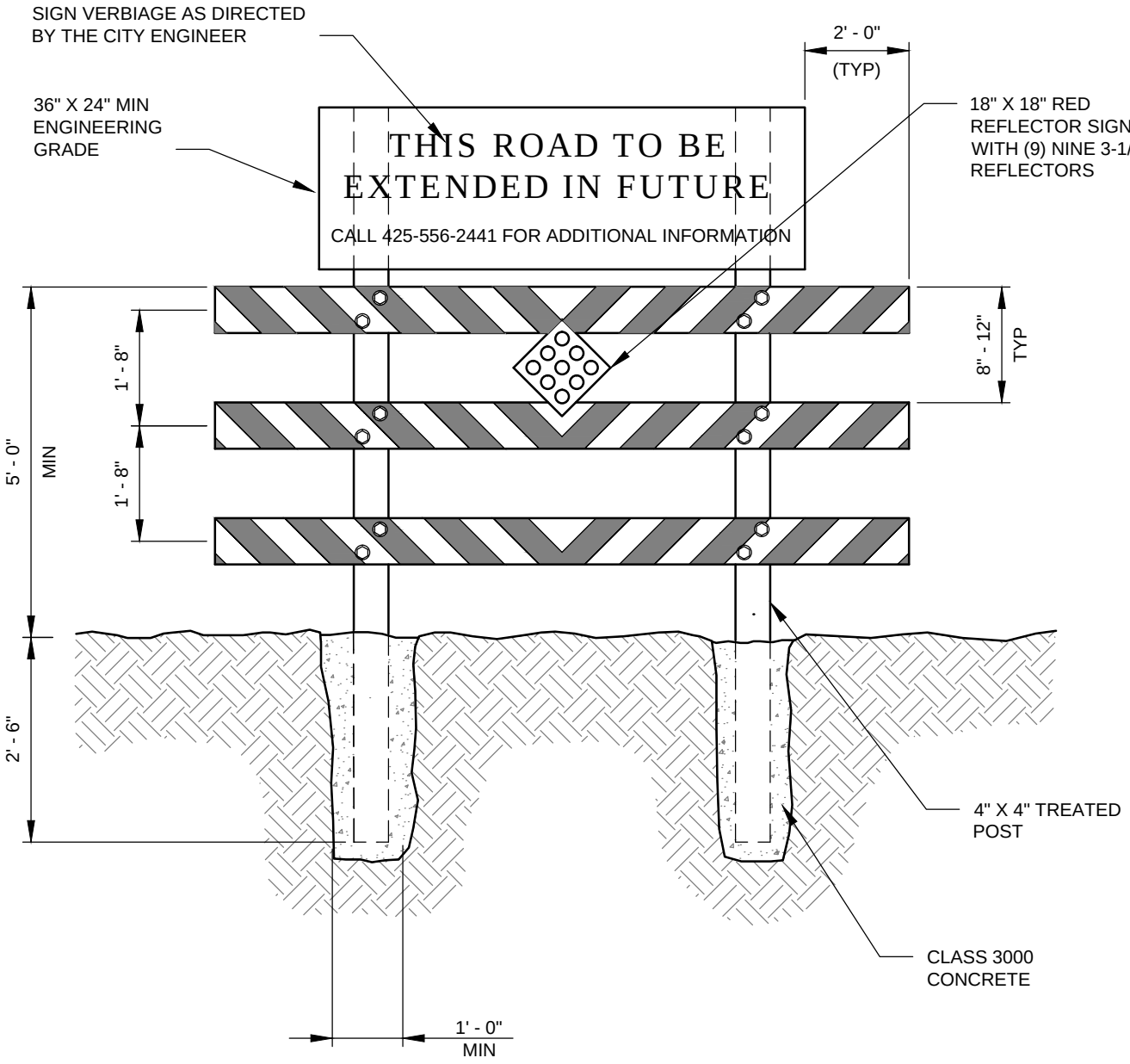

TYPE 3 BARRICADE

NTS

NOTES:

1. STRIPES SHALL BE RED ON WHITE DIAMOND GRADE REFLECTORIZED TAPE.
2. USE WSDOT STANDARD DETAIL PLAN K-80.20.00 FOR TEMPORARY TYPE III BARRICADE.
3. ALL SIGNS ATTACHED TO BARRICADE WITH GALVANIZED WOOD SCREWS.

Rob Crittenden APPROVED BY: ROB CRITTENDEN TRAFFIC OPERATIONS SAFETY AND ENGINEERING MANAGER	CityofRedmond WASHINGTON	STANDARD DETAILS TYPE 3 BARRICADE
REVISION DATE: JULY 01, 2015		FILE NAME: SD431.DWG / DETAIL NUMBER: 431

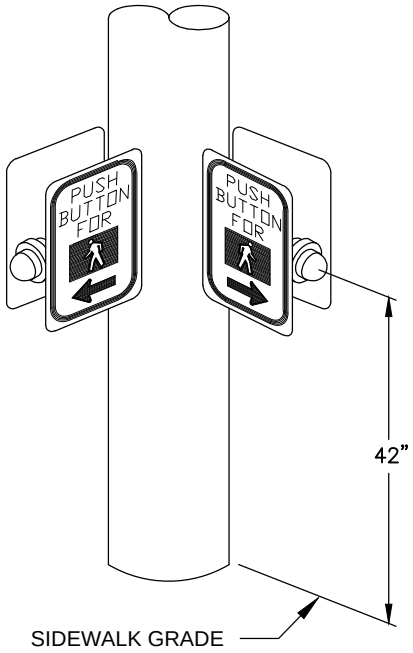

STYLE H-1
NTS

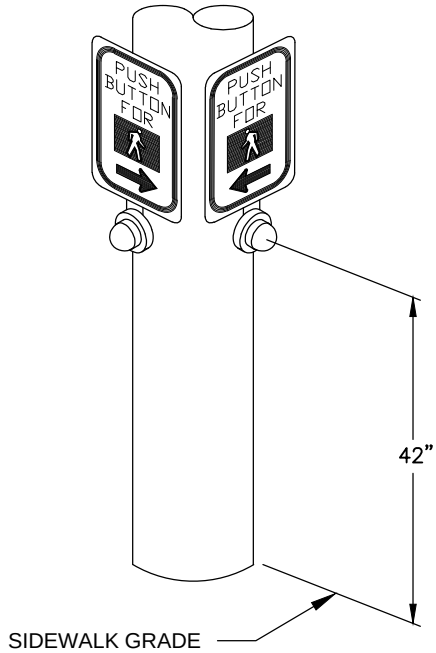

STYLE ADA
NTS

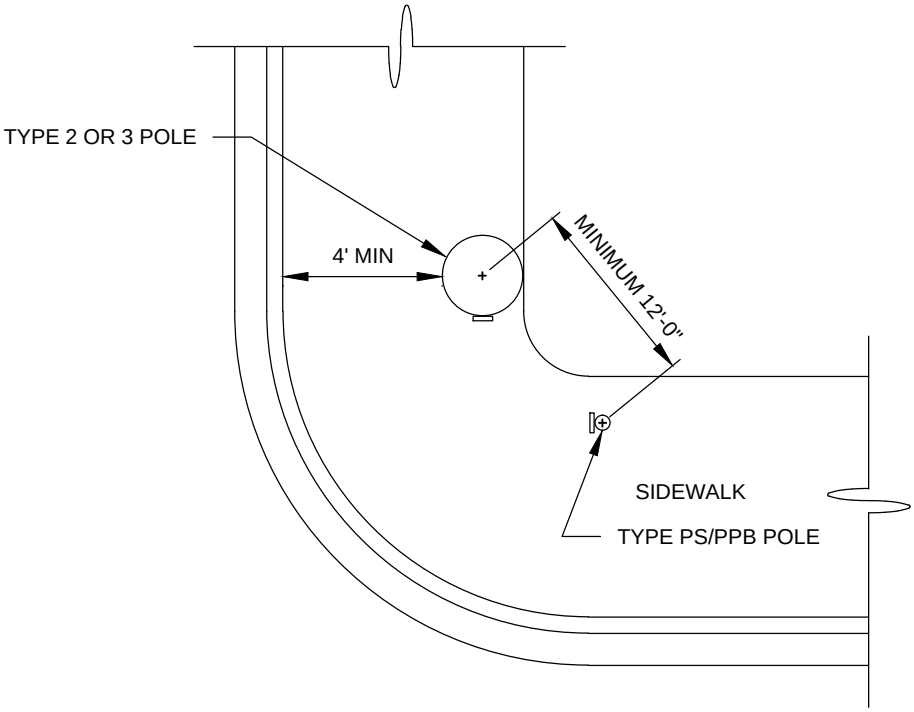

PLAN VIEW
NTS

NOTES:

1. PEDESTRIAN PUSH - BUTTON SHALL BE ACCESSIBLE STYLE UNLESS OTHERWISE SPECIFIED IN THE PLANS.
2. SEE REDMOND SIGNAL STANDARDS MANUAL FOR POLE PLACEMENT LOCATION RELATIVE TO WHEELCHAIR RAMPS.

Rob Crittenden APPROVED BY: ROB CRITTENDEN TRAFFIC OPERATIONS SAFETY AND ENGINEERING MANAGER	CityofRedmond WASHINGTON	STANDARD DETAILS PEDESTRIAN PUSH BUTTON ORIENTATION
REVISION DATE: JULY 01, 2015		FILE NAME: SD453.DWG / DETAIL NUMBER: 453

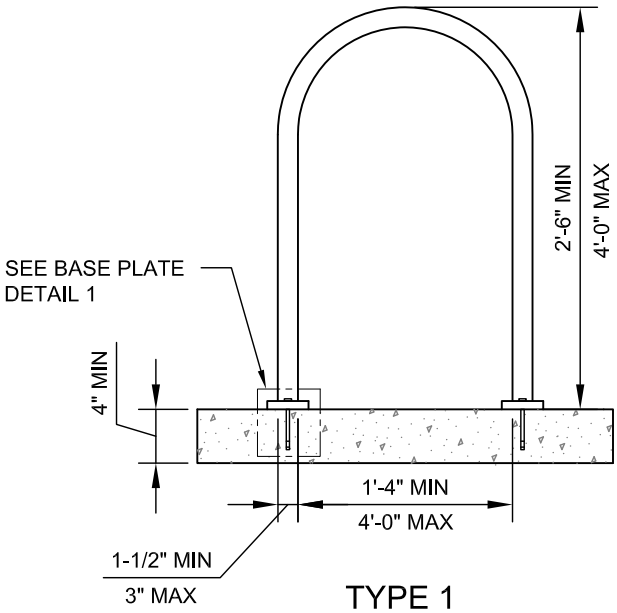

TYPE 1
NTS

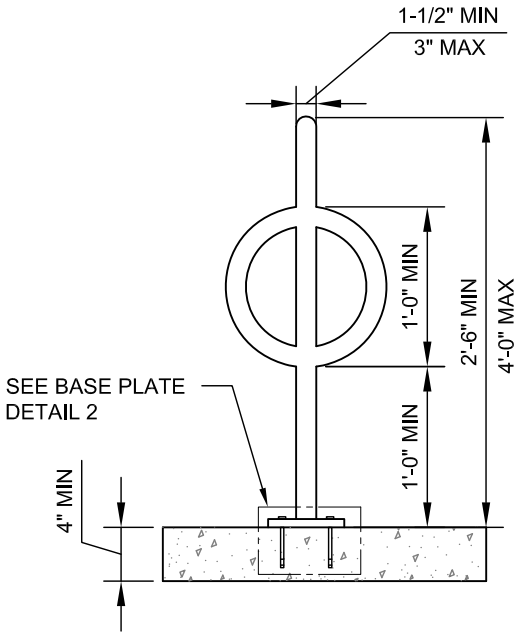

TYPE 2
NTS

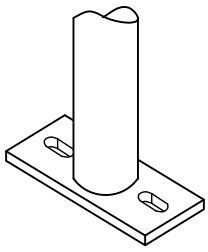

BASE PLATE DETAIL 1
NTS

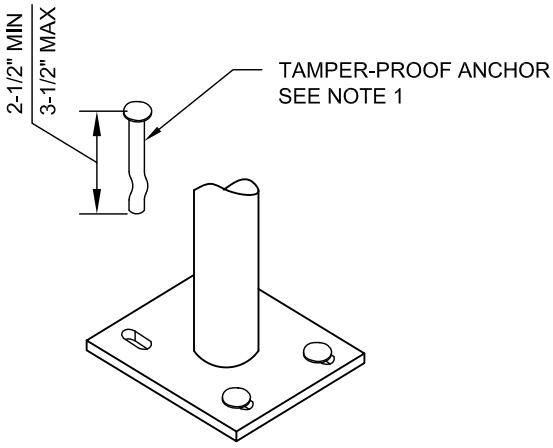

BASE PLATE DETAIL 2
NTS

NOTES:

1. SECURE RACKS TO CONCRETE WITH TAMPER-PROOF ANCHORS AS PROVIDED BY VENDOR, OR CONCRETE SPIKES. ANCHOR HEAD WILL BE SIZED TO SECURED RACK AND BETWEEN 2-1/2" AND 3-1/2" LONG.
2. THE HOLES HAVE TO BE AT LEAST 6" AWAY FROM ANY CRACKS IN THE BASE MATERIAL.
3. OTHER BICYCLE RACKS MAY BE APPROVED BY THE TRANSPORTATION ENGINEER.

APPROVED BY: DONALD CAIRNS TRANSPORTATION PLANNING AND ENGINEERING MANAGER	CityofRedmond WASHINGTON	STANDARD DETAILS **APPROVED BICYCLE RACKS**
REVISION DATE: JULY 01, 2014		FILE NAME: SD454.DWG — DETAIL NUMBER: **454**

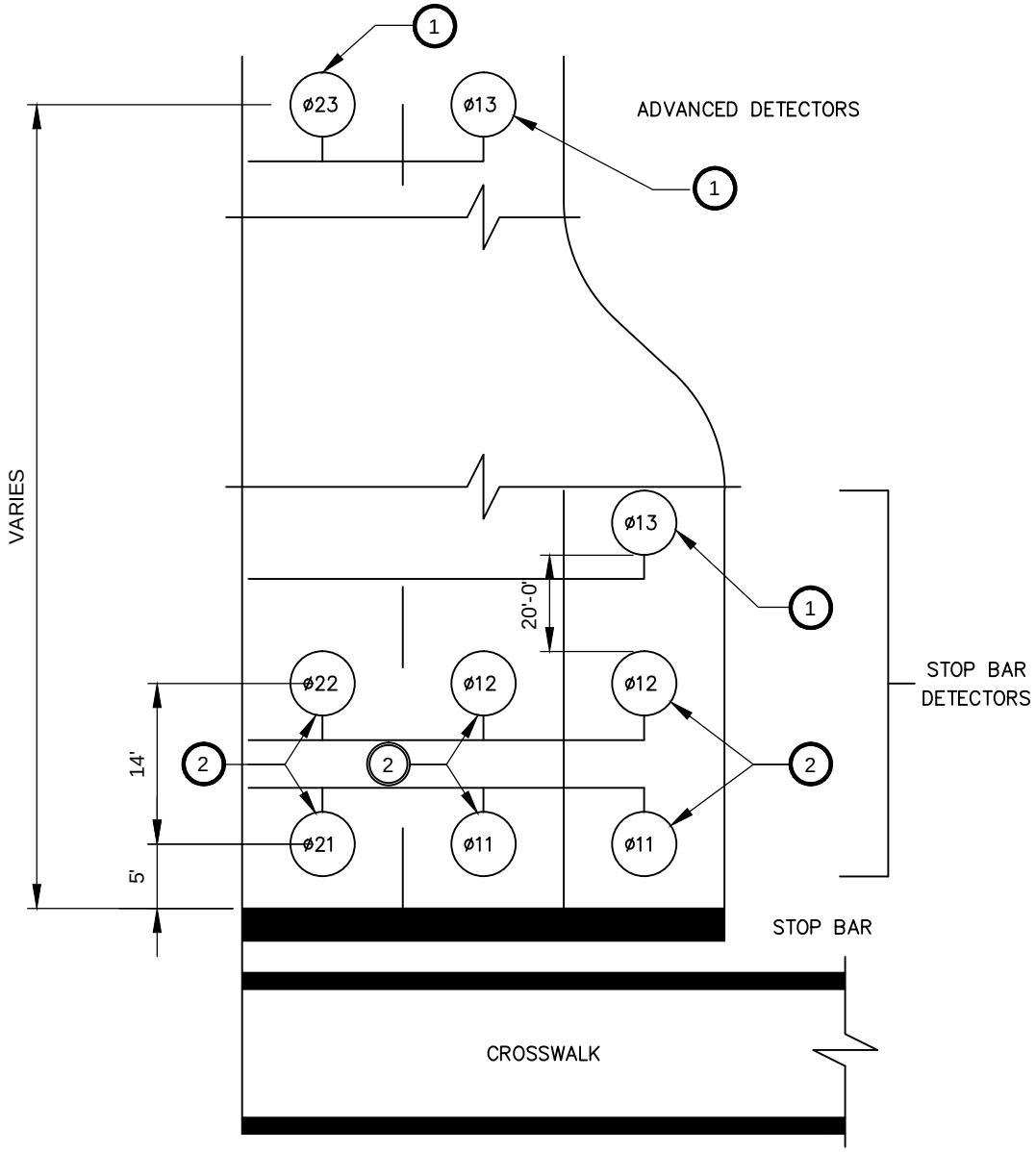

NOTES:

1. SPLICE INDIVIDUAL LEADS TO SHIELDED, TWISTED CONDUCTOR PAIR IN ADJACENT JUNCTION BOX.
2. CONNECT DETECTOR LEADS IN SERIES AND SPLICE TO SHIELDED, TWISTED CONDUCTOR PAIR IN ADJACENT JUNCTION BOX.
3. LOOPS TO BE CENTERED IN LANES.
4. NUMBER CORRESPONDS TO THE PHASE NUMBER AS SHOWN ON THE DESIGN.
5. SEE STANDARD DETAIL 455, 456 AND WSDOT STANDARD PLAN J-50 FOR LOOP CONSTRUCTION DETAILS. SEE STANDARD DETAIL 311A AND 311B FOR CROSSWALK AND STOP LINE DETAILS.
6. FINAL LOOP LOCATION TO BE APPROVED BY THE ENGINEER.

Rob Crittenden

APPROVED BY: ROB CRITTENDEN
TRAFFIC OPERATIONS SAFETY AND ENGINEERING MANAGER

REVISION DATE: JULY 01, 2015

CityofRedmond WASHINGTON

STANDARD DETAILS

LOOP DETECTOR NUMBERING AND SPACING

FILE NAME: SD454A.DWG

DETAIL NUMBER: 454A

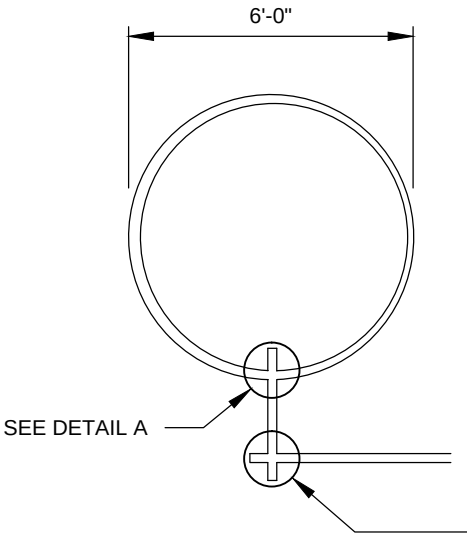

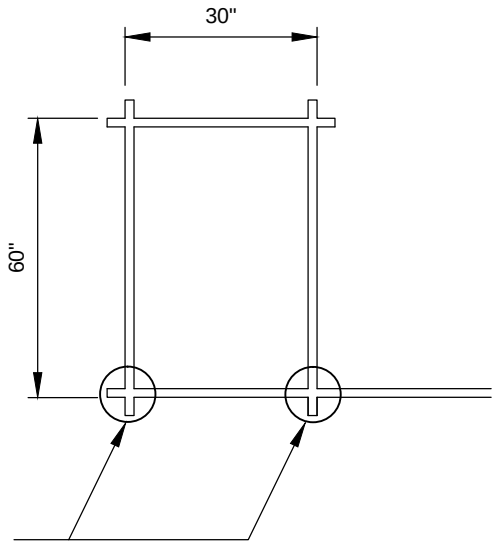

3/8" TO 1/2" WIDE SAWCUT
SEE DETAIL B

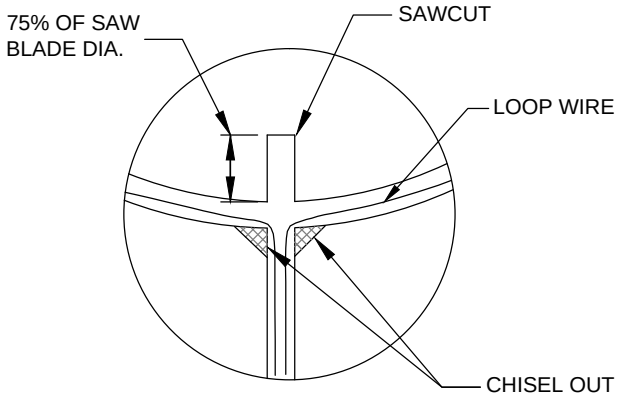

DETAIL A
NTS

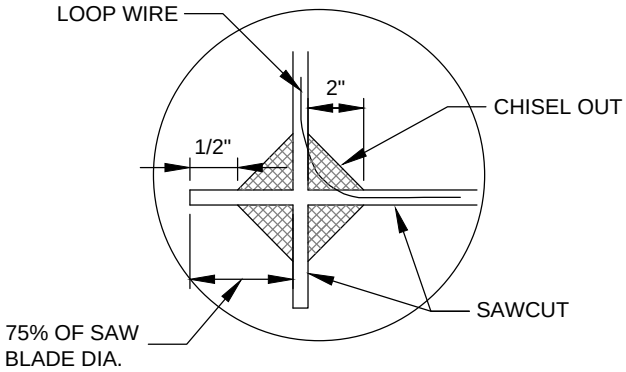

DETAIL B
NTS

NOTES:

1. DEPTH OF SAWCUT SHALL BE 2.5" UNLESS SPECIFIED OTHERWISE (2.75" AT PAVEMENT JOINTS)
2. ALL AREAS WHERE LOOP WIRES ARE TO BE PLACED SHALL HAVE A UNIFORM DEPTH AND SMOOTHNESS.
3. LOOP SEALANT SHALL BE CRAFCO MSI 34271. APPLY PER MANUFACTURER'S RECOMMENDATIONS.
4. ALL LOOPS SHALL HAVE 4 TURNS OF WIRE.
5. BICYCLE LOOPS SHALL HAVE 5 TURNS OF WIRE.
6. SAWCUT SHALL BE CONSTRUCTED TO MINIMIZE NUMBER OF BENDS BETWEEN LOOPS AND THE ADJACENT BOX.

Rob Crittenden

APPROVED BY: ROB CRITTENDEN
TRAFFIC OPERATIONS SAFETY AND ENGINEERING MANAGER

REVISION DATE: JULY 01, 2015

CityofRedmond
WASHINGTON

STANDARD DETAILS

LOOP DETECTOR SAWCUT

FILE NAME: SD455.DWG

DETAIL NUMBER: 455

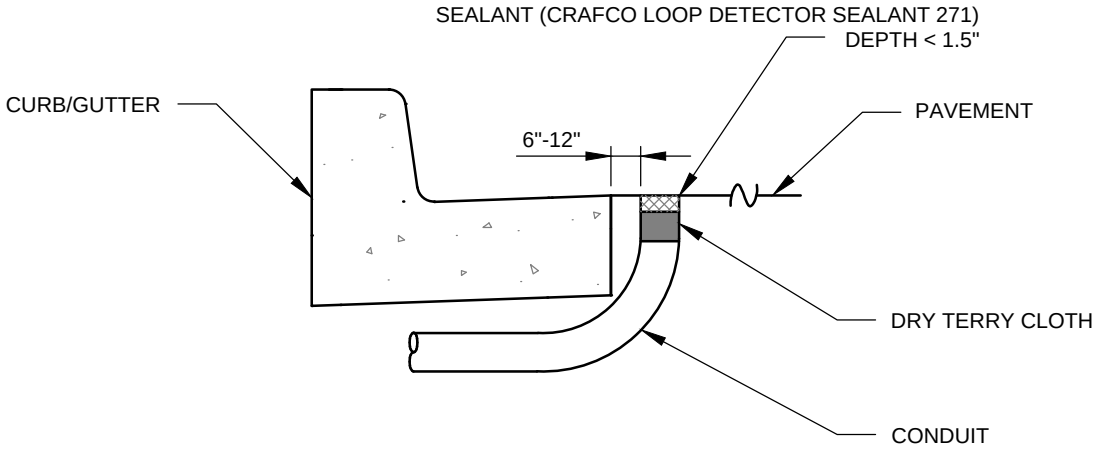

CONDUIT UNDER CURB

NTS

NOTE:

HOLES > 3-1/2" DIA. REQUIRE AN ASPHALT PATCH.
ASPHALT SHALL BE HMA FOR PAVEMENT REPAIR.

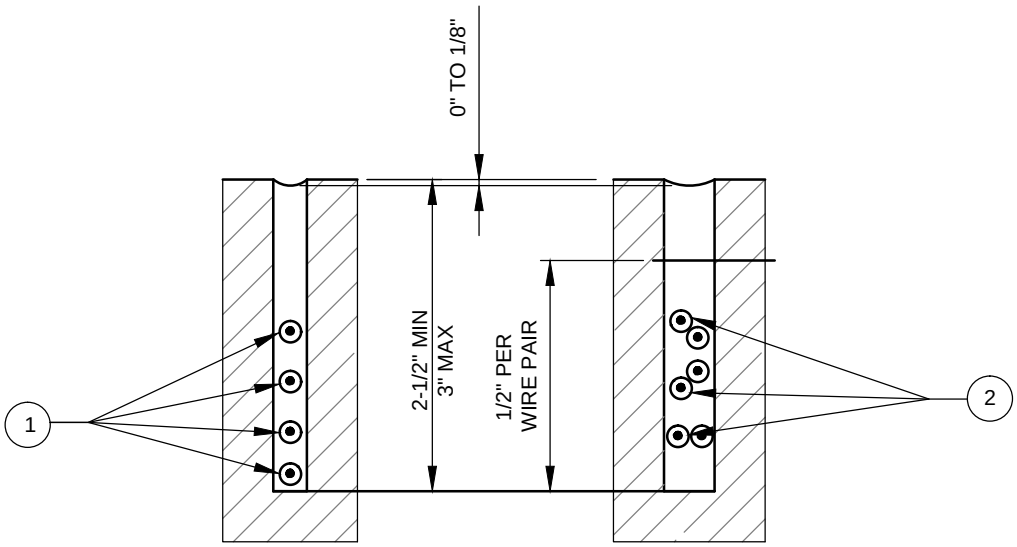

1/4" LOOP SAWCUT

NTS

1/2" LEAD-IN SAWCUT

NTS

CROSS-SECTION OF SAWCUTS

NTS

NOTES:

1. LOOP WIRE - NUMBER VARIES. (SEE LOOP WINDING DETAILS)
2. LEAD - IN WIRES: ONE PAIR FOR EACH LOOP SERVED. THREE PAIRS MAXIMUM PER SAWCUT.
3. EXTEND SAWCUT SUFFICIENT LENGTH TO PROVIDE FULL DEPTH AROUND CORNER.
4. STOP BAR DETECTION STUB-OUT TYPICALLY 13 FEET FROM STOP LINE.

Rob Crittenden

APPROVED BY: ROB CRITTENDEN
TRAFFIC OPERATIONS SAFETY AND ENGINEERING MANAGER

REVISION DATE: JULY 01, 2015

CityofRedmond WASHINGTON

STANDARD DETAILS

SAWCUT AND CONDUIT UNDER CURB

FILE NAME: SD456.DWG

DETAIL NUMBER: 456

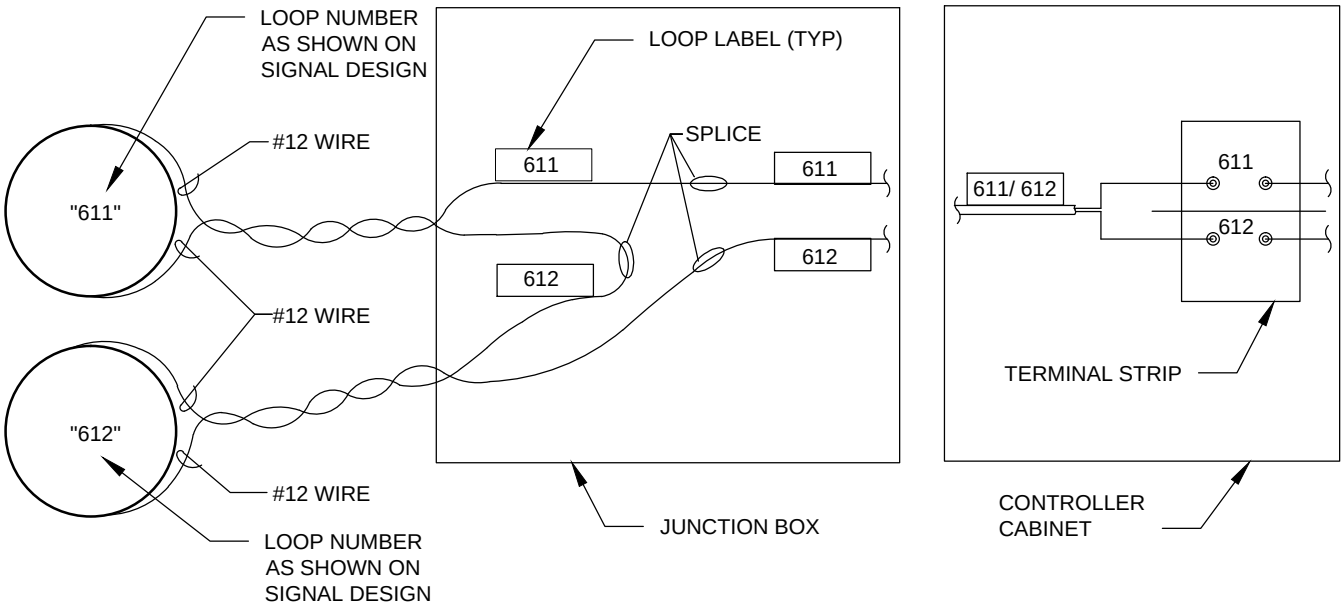

LOOP WIRE LABELING DETAIL

NTS

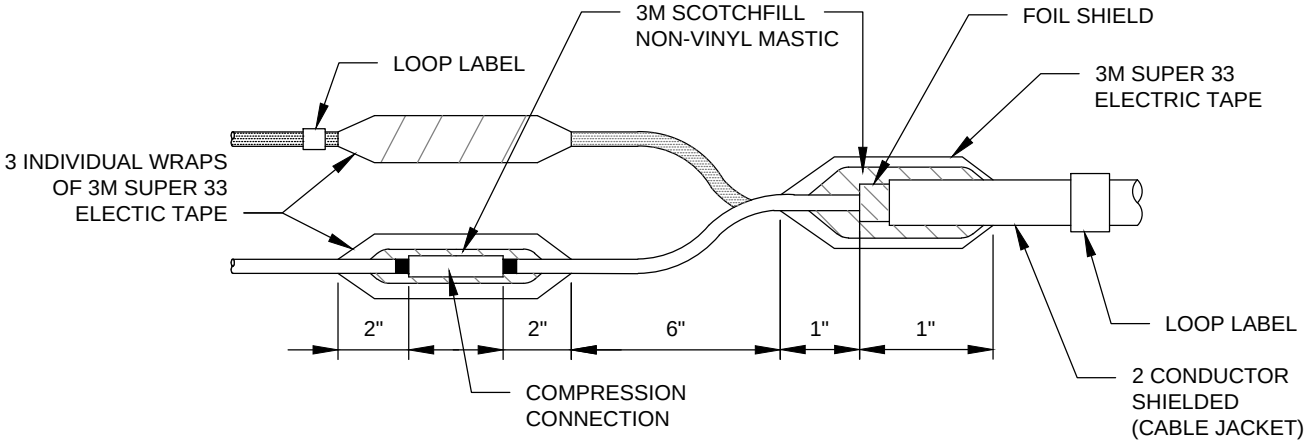

LOOP SPLICE DETAIL

NTS

Rob Crittenden APPROVED BY: ROB CRITTENDEN TRAFFIC OPERATIONS SAFETY AND ENGINEERING MANAGER	CityofRedmond WASHINGTON	STANDARD DETAILS LOOP DETECTOR SPLICE AND WIRING LABEL
REVISION DATE: JULY 01, 2015		FILE NAME: SD457.DWG / DETAIL NUMBER: 457

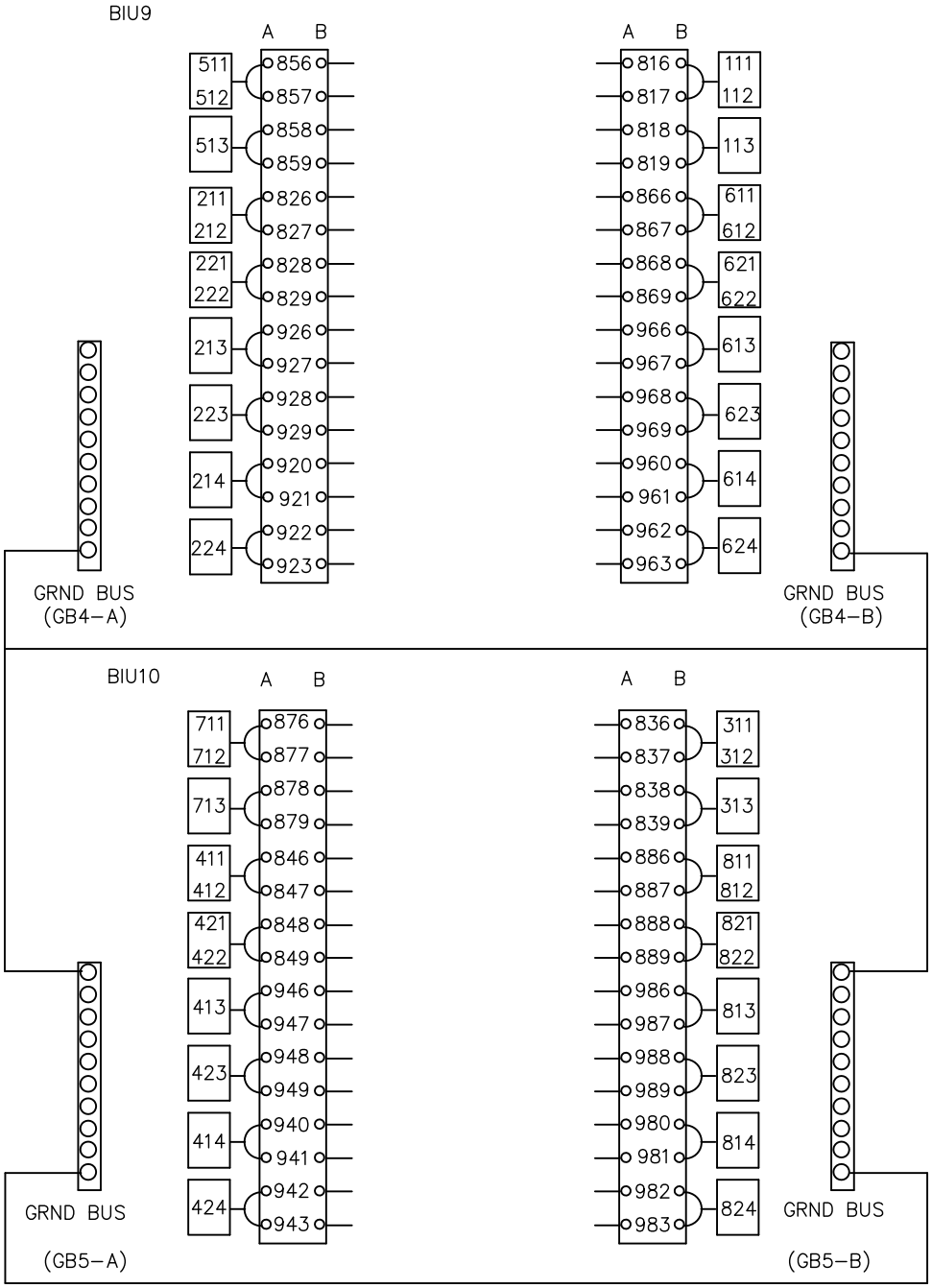

Rob Crittenden

APPROVED BY: ROB CRITTENDEN
TRAFFIC OPERATIONS SAFETY AND ENGINEERING MANAGER

REVISION DATE: JULY 01, 2014

CityofRedmond WASHINGTON

STANDARD DETAILS

LOOP TERMINAL STRIP

FILE NAME: SD458.DWG

DETAIL NUMBER: **458**

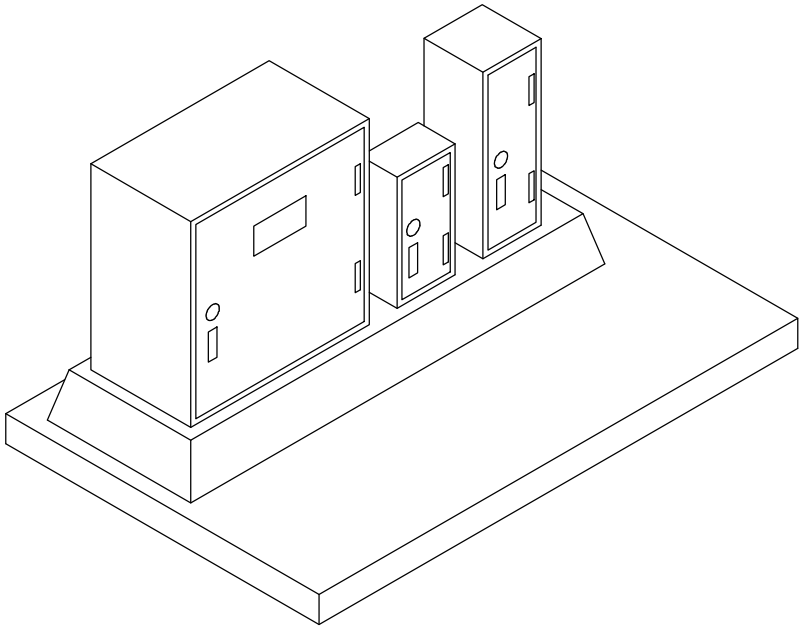

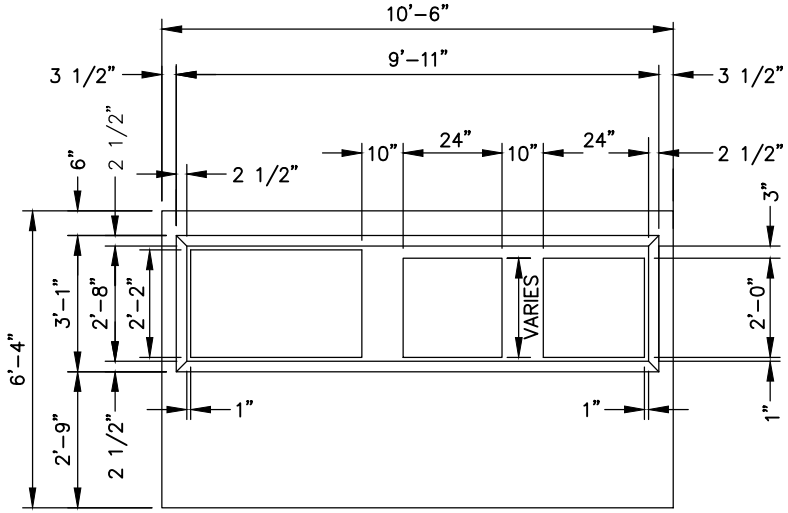

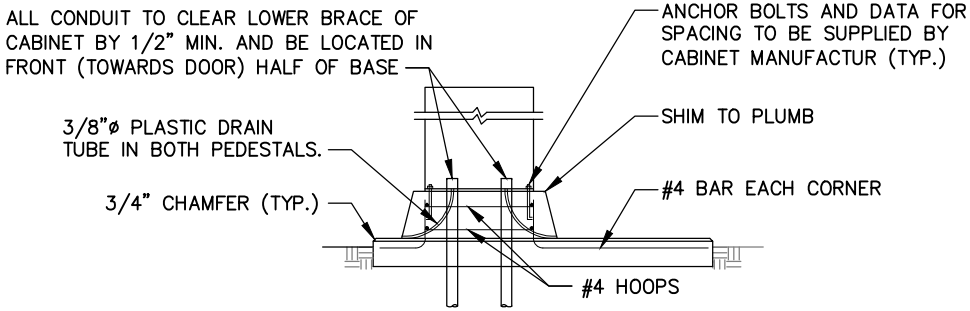

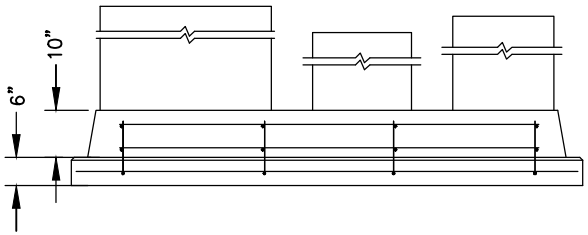

NOTES:

1. CABINET FOUNDATION SHALL BE CLASS 3000 AIR ENTRAINED CONCRETE.
2. WHERE CABINET FOUNDATION IS LOCATED ADJACENT TO A SIDEWALK, CONSTRUCT THE TOP FLUSH WITH SIDEWALK GRADE, OMITTING CHAMFER WHERE TOP AND SIDEWALK ABUT.
3. FOUNDATION DESIGN IS TYPICAL, CONTRACTOR SHALL UTILIZE CABINET MANUFACTURER'S SPECIFICATIONS TO ASSURE PROPER FIT OF CABINET ON BASE WITH RESPECT TO CONDUIT PLACEMENT. ENGINEER MUST APPROVE FORM WORK BEFORE PLACEMENT OF CONCRETE.
4. EXPANSION ANCHOR BOLTS (KWIK–BOLT, WEJ–IT, OR EQUAL) MAY BE USED TO FIT CABINETS TO EXISTING FOUNDATION.
5. SILICON SEAL SHALL BE PLACED BETWEEN CABINET AND BASE.
6. SEE PLANS FOR DOOR ORIENTATION.
7. A SPARE 3"ø CONDUIT SHALL BE INSTALLED FROM CONTROLLER CABINET TO NEAREST J–BOX.
8. A 1"ø CONDUIT SHALL BE INSTALLED UNDER SERVICE CABINET FOR GROUND.
9. IF UPS CABINET NOT PART OF PROJECT, INSTALL CITY FURNISHED CAP FOR EXPOSED CONDUITS.

APPROVED BY: ROB CRITTENDEN
TRAFFIC OPERATIONS SAFETY AND ENGINEERING MANAGER

REVISION DATE: JULY 01, 2015

CityofRedmond WASHINGTON

STANDARD DETAILS

CABINET FOUNDATION

FILE NAME: SD459A.DWG

DETAIL NUMBER: 459A

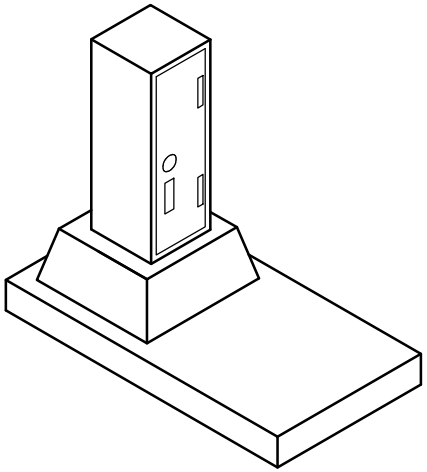

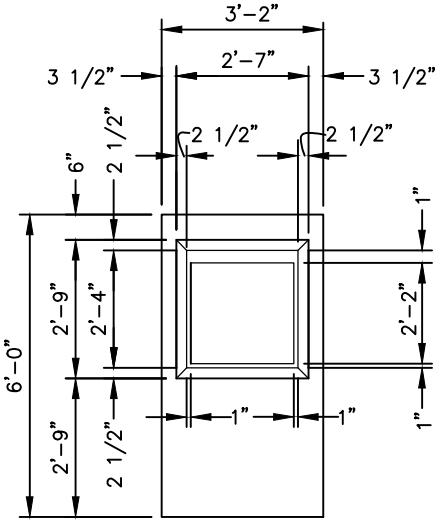

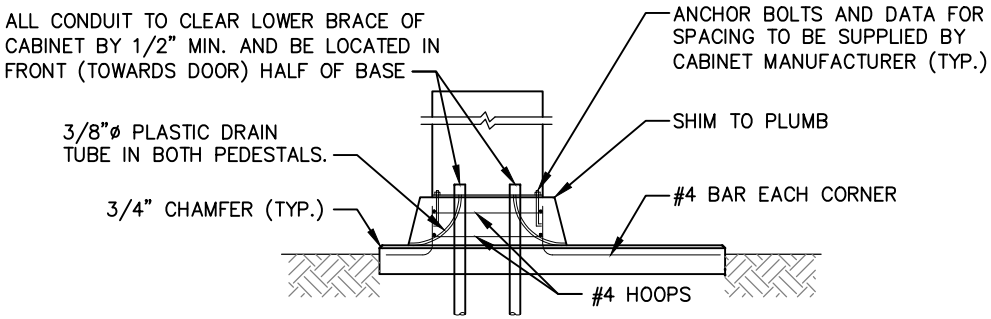

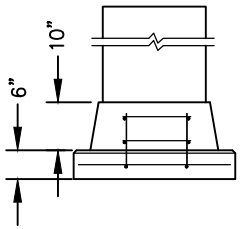

NOTES:

1. CABINET FOUNDATION SHALL BE CLASS 3000 AIR ENTRAINED CONCRETE.
2. WHERE CABINET FOUNDATION IS LOCATED ADJACENT TO A SIDEWALK, CONSTRUCT THE TOP FLUSH WITH SIDEWALK GRADE, OMITTING CHAMFER WHERE TOP AND SIDEWALK ABUT.
3. FOUNDATION DESIGN IS TYPICAL, CONTRACTOR SHALL UTILIZE CABINET MANUFACTURER'S SPECIFICATIONS TO ASSURE PROPER FIT OF CABINET ON BASE WITH RESPECT TO CONDUIT PLACEMENT. INSPECTOR MUST APPROVE FORM WORK BEFORE PLACEMENT OF CONCRETE.
4. EXPANSION ANCHOR BOLTS (KWIK-BOLT, WEJ-IT, OR EQUAL) MAY BE USED TO FIT CABINETS TO EXISTING FOUNDATION.
5. SILICON SEAL SHALL BE PLACED BETWEEN CABINET AND BASE.
6. SEE PLANS FOR DOOR ORIENTATION.
7. A SPARE 3"ø CONDUIT SHALL BE INSTALLED FROM CONTROLLER CABINET TO NEAREST J-BOX.
8. A 1"ø CONDUIT SHALL BE INSTALLED UNDER SERVICE CABINET FOR GROUND.

APPROVED BY: ROB CRITTENDEN
TRAFFIC OPERATIONS SAFETY AND ENGINEERING MANAGER

REVISION DATE: JULY 01, 2015

CityofRedmond WASHINGTON

STANDARD DETAILS

SERVICE CABINET FOUNDATION

FILE NAME: SD459C.DWG

DETAIL NUMBER: 459C

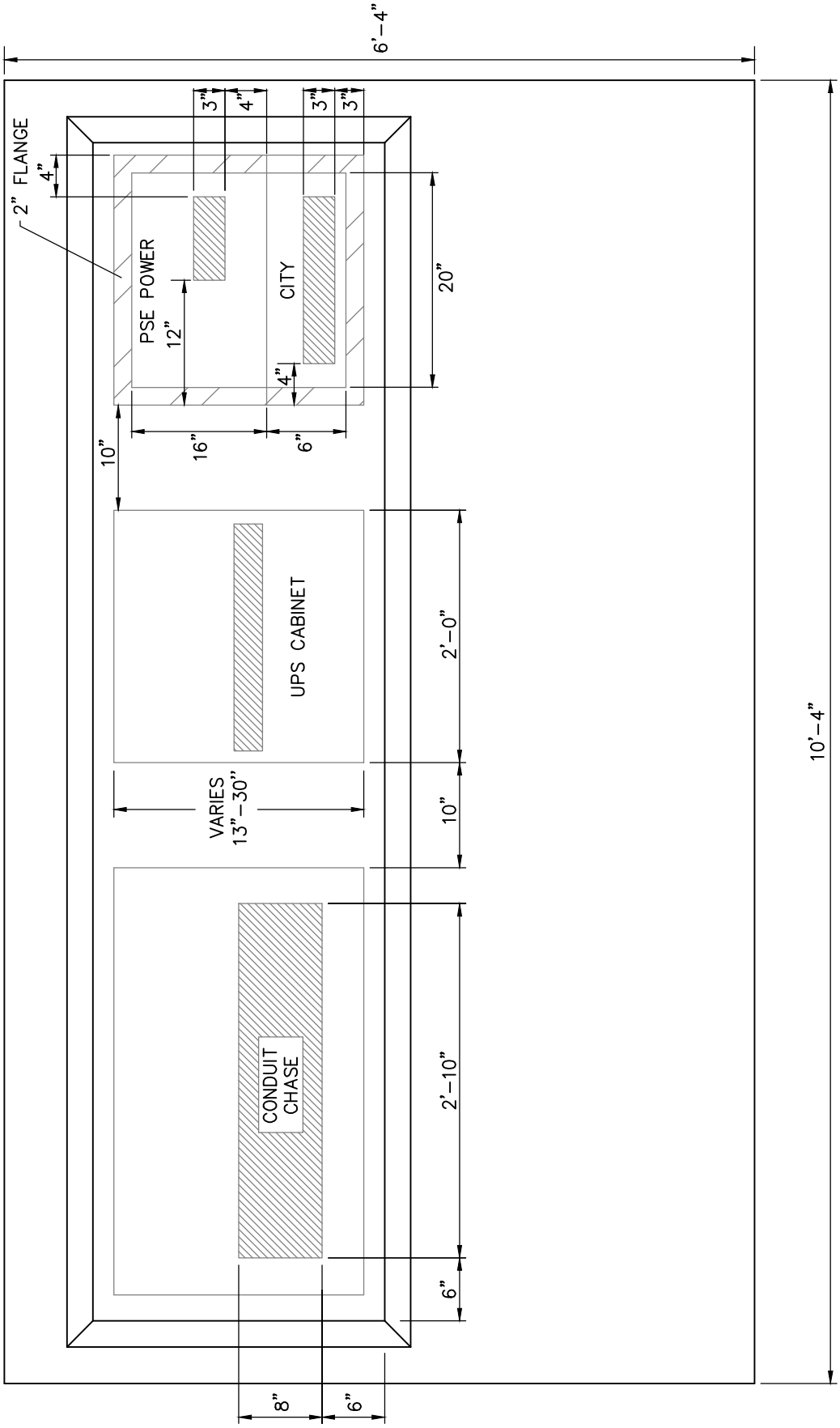

NOTE: ENSURE CABINET DOORS CAN OPEN FULLY.

Rob Crittenden

APPROVED BY: ROB CRITTENDEN
TRAFFIC OPERATIONS SAFETY AND ENGINEERING MANAGER

REVISION DATE: JULY 01, 2015

CityofRedmond
WASHINGTON

STANDARD DETAILS

CONTROLLER AND SERVICE CABINET FOOTPRINT

FILE NAME: SD460.DWG

DETAIL NUMBER: 460

COMPONENT SCHEDULE

1. METERBASE: 200 AMP, 4 JAW, AW NO. 124TB SAFETY SOCKET, WITH 5TH JAW AT 9:00 POSITION

2. PANELBOARD: 120/240 VAC, 200 AMP. 1 PHASE, 3 WIRE. COPPER BUS, 12 CIRCUIT
   MAIN BREAKER: 125 AMP, 2 POLE, CUTLER HAMMER NO. ED2125 65K AIC SERIES RATED
   CUTLER HAMMER TYPE BAB BOLT-ON BRANCH BREAKERS:
   - 3-15/2 ILLUMINATION BRANCH
   - 1-50/1 SIGNAL BRANCH
   - 1-15/1 CONTROL CKT BRANCH

3. CONTACTOR: 30 A LIGHTING RATED, 2 POLE, 120 VAC COIL
   1-REQUIRED PER ILLUMINATION CKT

4. TERMINAL BLOCK TO REMOTE PHOTOELECTRIC CELL

5. PHOTO-CELL BYPASS SWITCH, SPST 15 AMP, 277 VAC

CABINET: NEMA 3R PADMOUNT, 1/8" ALUMINUM TYPE 5052-H32 CONSTRUCTION
2 SCREENED AND GASKETED VENTS
HINGED DEADFRONT WITH 1/4 TURN FASTENERS ON DISTRIBUTION SECTION
DOORS: HEAVY DUTY CONCEALED HINGES (LIFT-OFF TYPE)
STAINLESS STEEL VAULT HANDLES
PADLOCKABLE ON METER DOOR, INTEGRAL "BEST LOCK" ON DISTRIBUTION DOOR
POLISHED WIRE GLASS WINDOW IN METER DOOR
CLOSED CELL NEOPRENE GASKET, CARD HOLDER
FINISH: OUTSIDE FINISH SHALL BE ANSI 61 GRAY POLYESTER POWDERCOAT OVER ZINC PRIME. INSIDE FINISH SHALL BE WHITE.

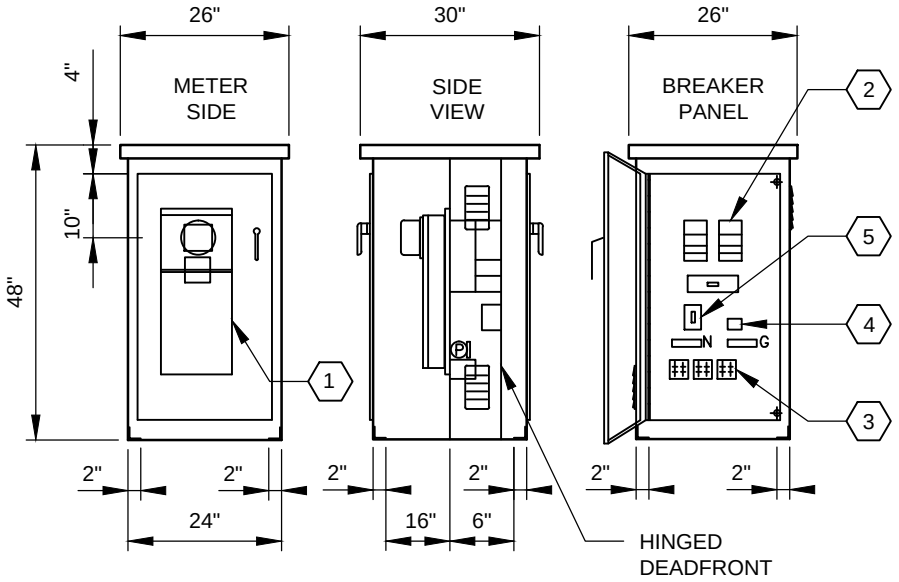

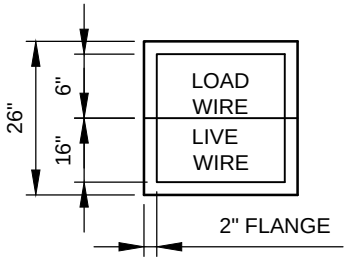

UL LISTED PER STANDARD #508A
SUITABLE FOR USE AS SERVICE ENTRANCE EQUIPMENT

CITY OF REDMOND
SERVICE CABINET SERIES 47995-R4
10-7-14 M.E. BELL
SKYLINE ELECTRIC AND MFG COMPANY

SERVICE CABINET

NTS

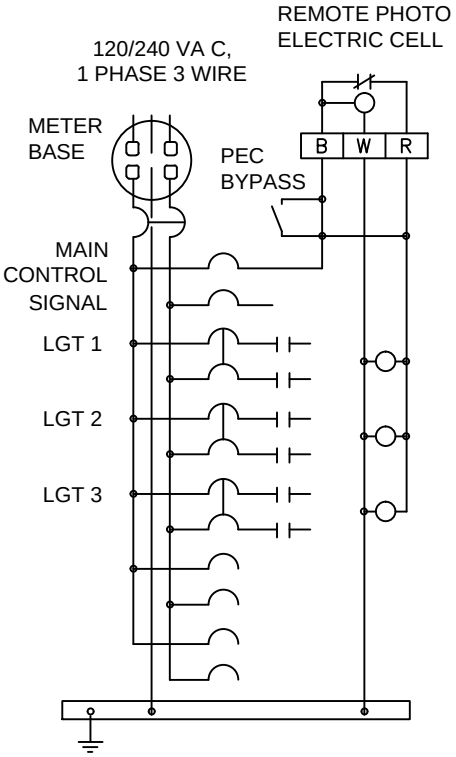

WIRING SCHEMATIC

NTS

Rob Crittenden

APPROVED BY: ROB CRITTENDEN
TRAFFIC OPERATIONS SAFETY AND ENGINEERING MANAGER

REVISION DATE: JULY 01, 2015

CityofRedmond WASHINGTON

STANDARD DETAILS

SERVICE CABINET

FILE NAME: SD461.DWG

DETAIL NUMBER: 461

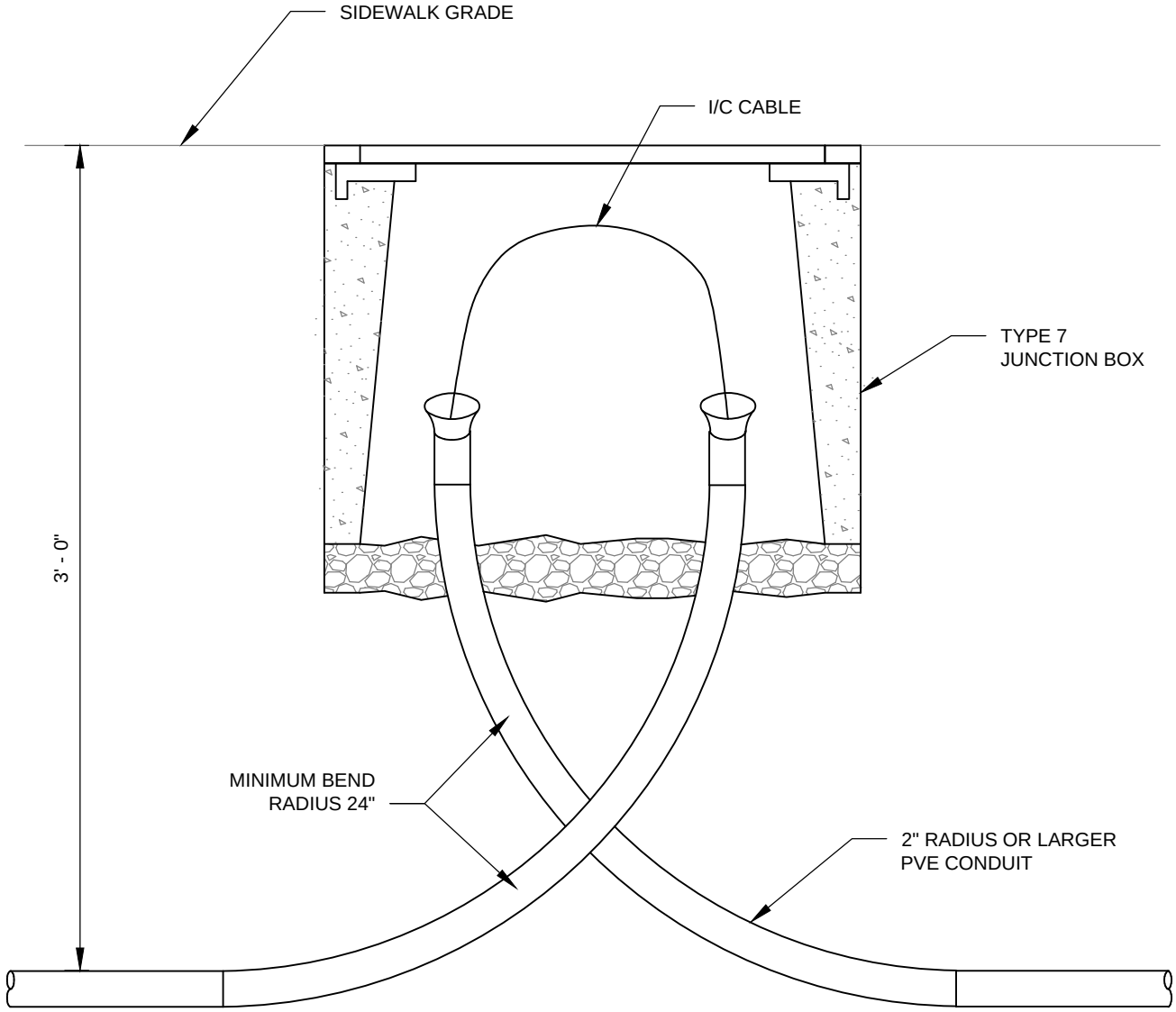

NOTES:

1. CONDUIT PLACEMENT SHALL FACILITATE 2' - 0" MINIMUM CABLE BEND.
2. STANDARD DETAIL 464 FOR JUNCTION BOX IN SOFT AREAS.

Rob Crittenden

APPROVED BY: ROB CRITTENDEN
TRAFFIC OPERATIONS SAFETY AND ENGINEERING MANAGER

REVISION DATE: JULY 01, 2015

CityofRedmond WASHINGTON

STANDARD DETAILS

INTERCONNECT CABLE AND CONDUIT JUNCTION BOX

FILE NAME: SD462.DWG

DETAIL NUMBER: 462

JUNCTION BOX ON SLOPE OR LANDSCAPE AREAS

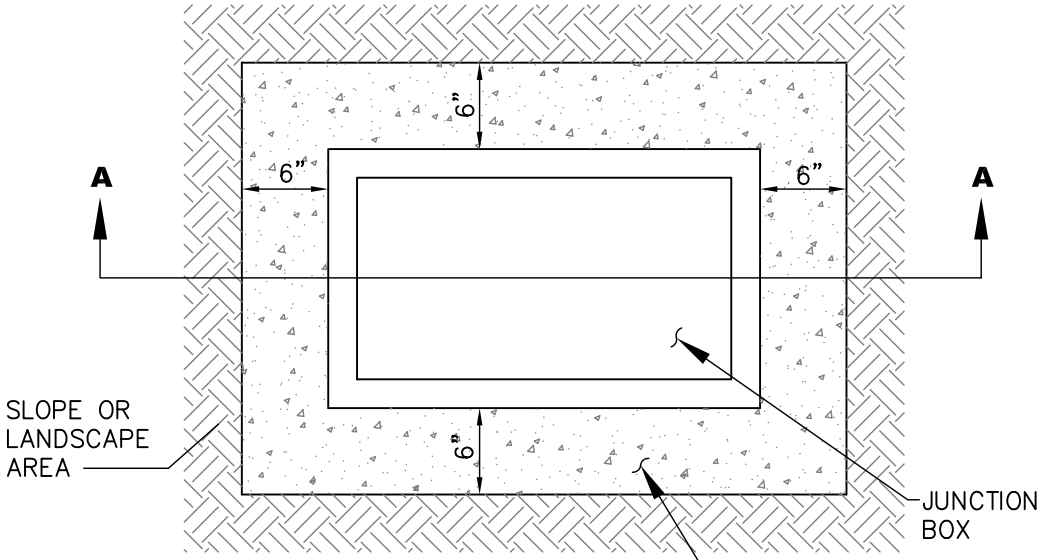

PLAN VIEW
NTS

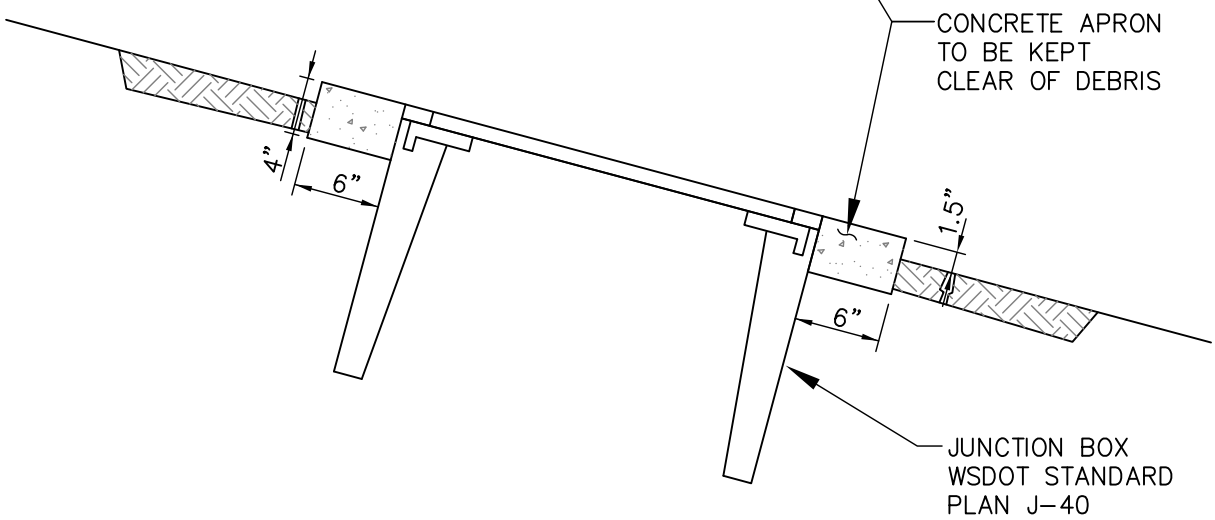

SECTION A-A
NTS

FOR NEW CONSTRUCTION AND MODIFICATION OF EXISTING J-BOX

Rob Crittenden APPROVED BY: ROB CRITTENDEN TRAFFIC OPERATIONS SAFETY AND ENGINEERING MANAGER	CityofRedmond WASHINGTON	STANDARD DETAILS **JUNCTION BOX ON SLOPE OR SOFT AREAS**
REVISION DATE: JULY 01, 2014		FILE NAME: SD464.DWG / DETAIL NUMBER: **464**

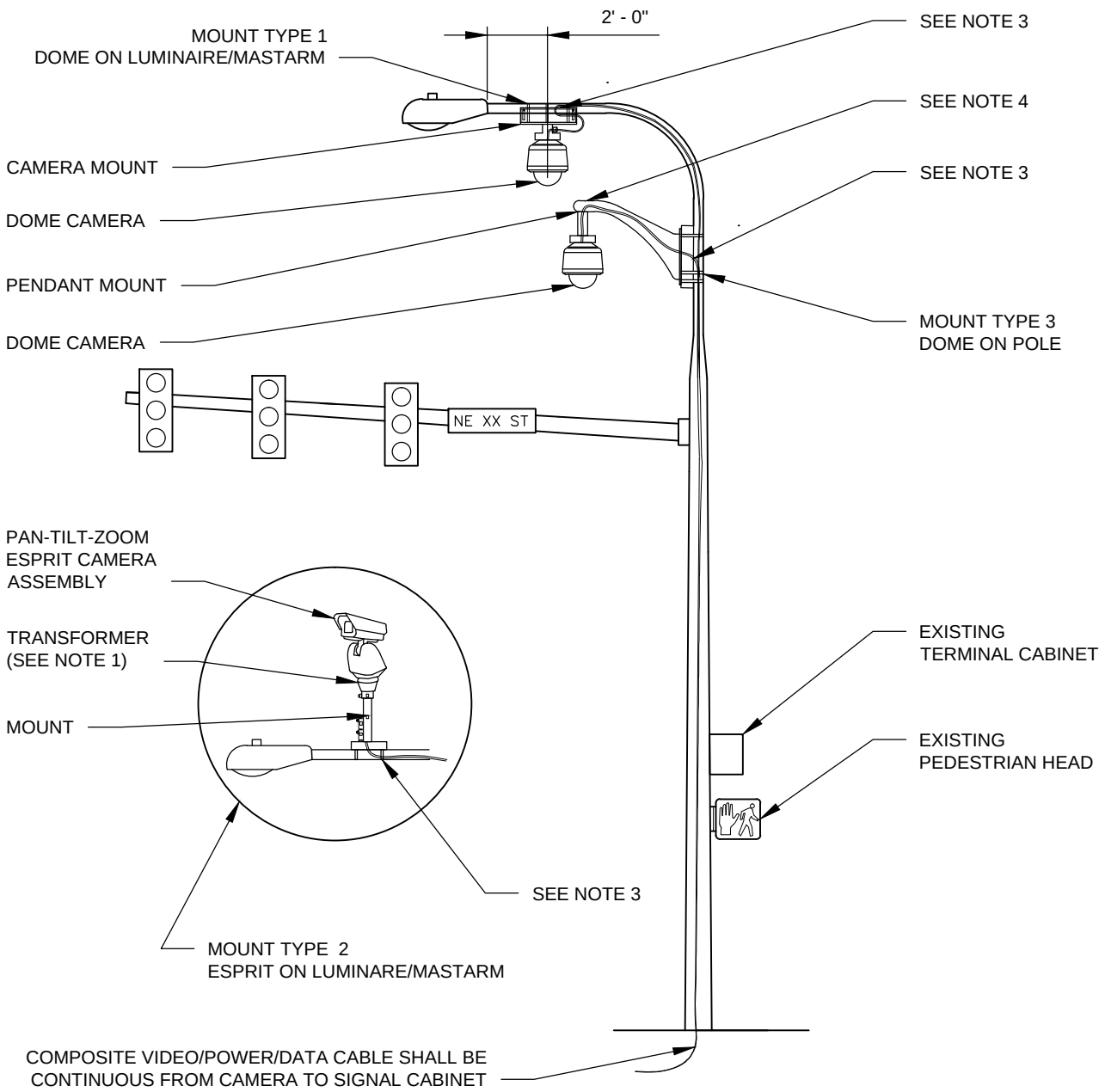

NOTES:

1. THE CONTRACTOR SHALL CONNECT THE POWER CONDUCTORS OF THE COMPOSITE CABLE TO THE TRANSFORMER IN THE TRANSFORMER BOX OF THE ESPRIT CAMERA. POWER CONDUCTORS ARE PROVIDED FROM THE TRANSFORMER TO THE CAMERA. THE TRANSFORMER FOR THE DOME CAMERAS WILL BE LOCATED IN THE CONTROLLER CABINET.

2. ATTACH POLE-MOUNTED CAMERAS DIRECTLY BELOW THE BEND IN THE LUMINAIRE ARM OR BELOW THE LUMINAIRE ARM ATTACHMENT POINT IF ONE EXISTS UNLESS OTHERWISE SPECIFIED ON THE PLANS.

3. DRILL 1.0-INCH TAPPED HOLE IN POLE, MAST ARM, OR LUMINAIRE ARM FOR CAMERA CABLE ENTRANCE. INSERT 1.0-INCH ALUMINUM THREADED STRAIN RELIEF TO PROTECT CABLE ENTERING POLE AND PROVIDE WATERTIGHT FIT.

4. THE WIRE ACCESS PANEL ON THE TOP OF THE PENDANT ARM SHALL BE PACKED WITH DUCT SEAL TO BLOCK MOISTURE PENETRATION.

Rob Crittenden APPROVED BY: ROB CRITTENDEN TRAFFIC OPERATIONS SAFETY AND ENGINEERING MANAGER	CityofRedmond WASHINGTON	STANDARD DETAILS CCTV CAMERA MOUNTING
REVISION DATE: JULY 01, 2015		FILE NAME: SD465.DWG / DETAIL NUMBER: 465

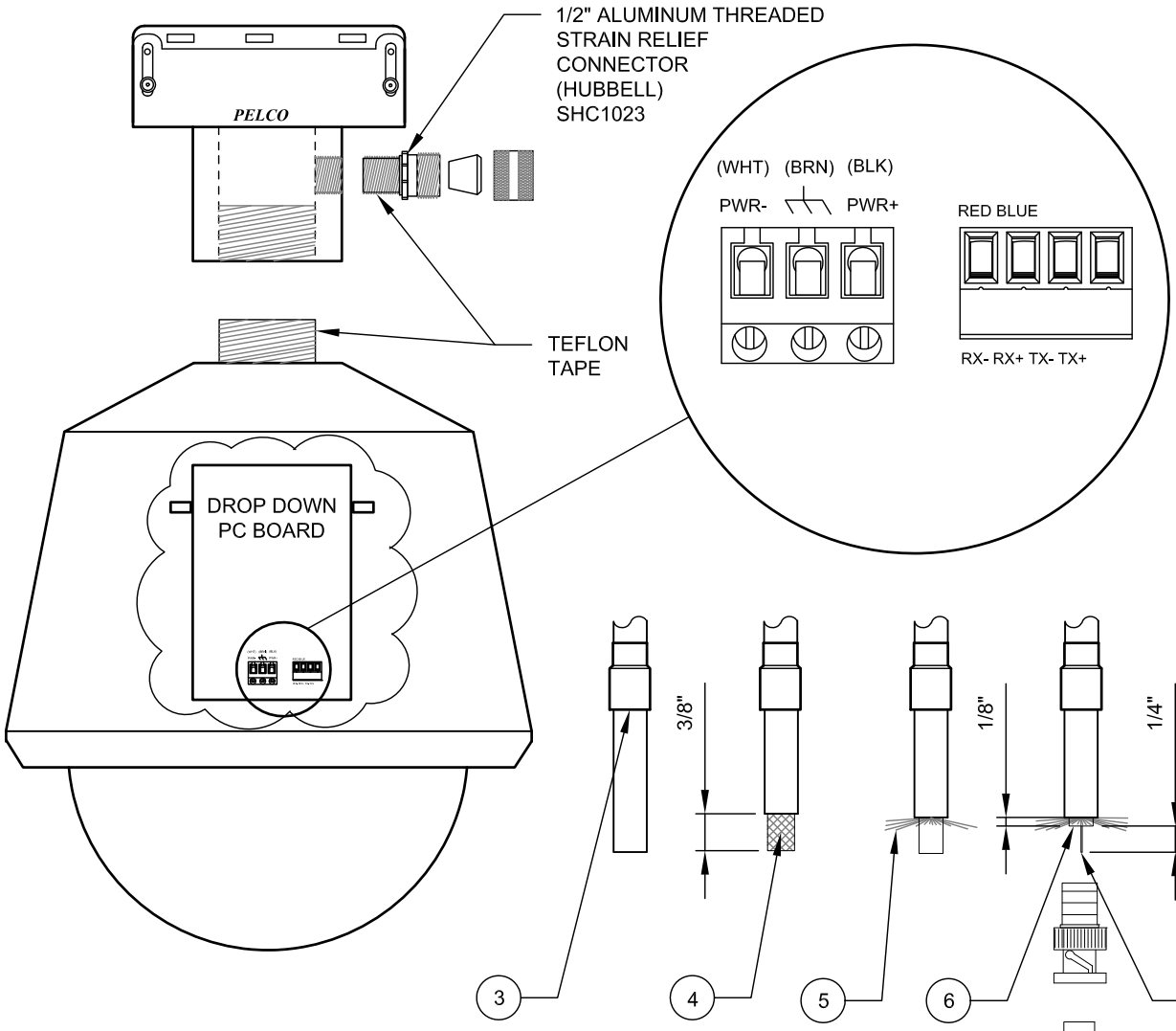

CCTV VIDEO CABLE CONNECTION

NTS

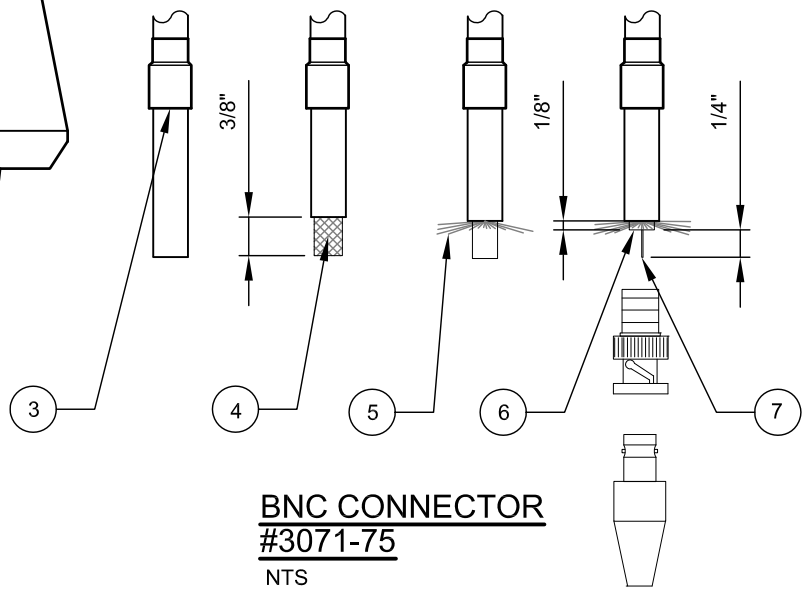

BNC CONNECTOR #3071-75

NTS

NOTES:

1. INSERT CABLE THROUGH CONNECTOR AND CAMERA HOUSING. LEAVE SUFFICIENT SLACK FOR THE PTZ CONNECTIONS.
2. USE PROPER TOOLS TO STRIP AND CRIMP RG59/U CABLE AND BNC CONNECTOR.
3. INSERT BNC BOOT ON CABLE FIRST.
4. STRIP INSULATION BACK 3/8" EXPOSING COPPER SHIELD.
5. FOLD BACK COPPER SHIELD.
6. CUT OFF DIELECTRIC LEAVING 1/8" FROM COPPER SHIELD.
7. EXPOSE MINIMUM 1/4" OF SOLID COPPER CONDUCTOR.
8. INSERT COPPER WIRE INTO BNC CONNECTOR. FOLD COPPER SHIELD OVER BNC CONNECTOR. MAKE SURE NO COPPER SHIELD CONTACTS CENTER CONDUCTOR.
9. SLIDE BNC BOOT OVER COPPER SHIELD AND BNC CONNECTOR. CRIMP BOOT ONTO THE CONNECTOR AND CABLE.

Rob Crittenden APPROVED BY: ROB CRITTENDEN TRAFFIC OPERATIONS SAFETY AND ENGINEERING MANAGER	CityofRedmond WASHINGTON	STANDARD DETAILS **CCTV VIDEO CABLE CONNECTION**
REVISION DATE: JULY 01, 2014		FILE NAME: SD465A.DWG DETAIL NUMBER: **465A**

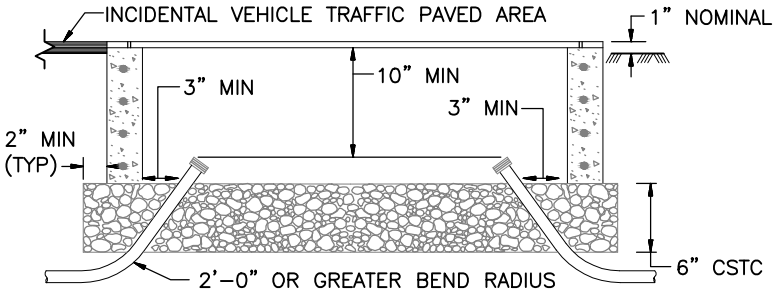

TYPE 1 OR 2 JUNCTION BOX INSTALLATION DETAIL

NTS

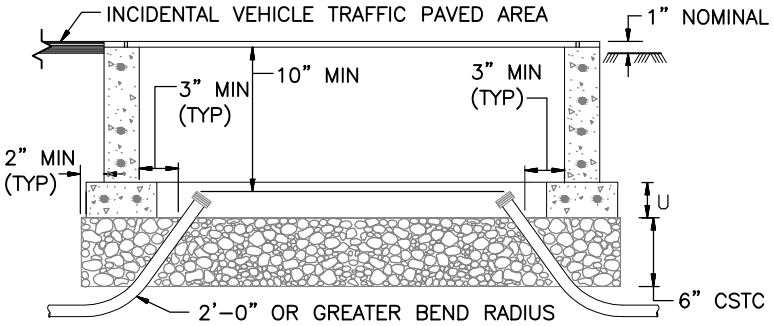

TYPE 7 JUNCTION BOX INSTALLATION DETAIL

NTS

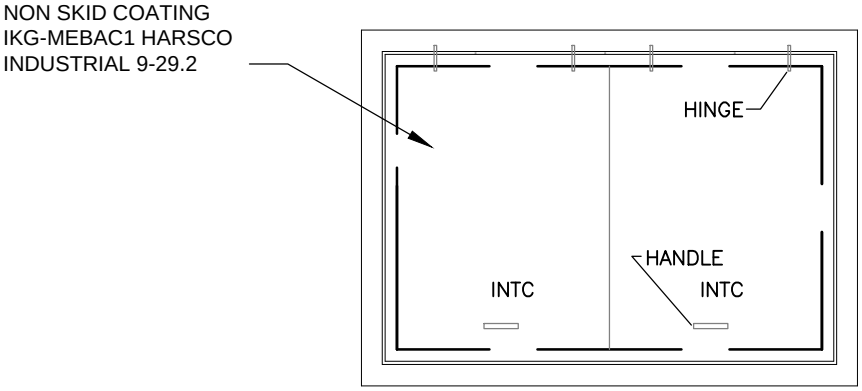

DUAL LID DETAIL - TYPE 7

NTS

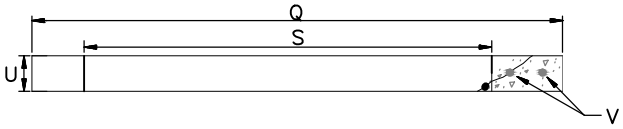

FOUNDATION ELEVATION - TYPE 7

NTS

Rob Crittenden

APPROVED BY: ROB CRITTENDEN
TRAFFIC OPERATIONS SAFETY AND ENGINEERING MANAGER

REVISION DATE: JULY 01, 2015

CityofRedmond WASHINGTON

STANDARD DETAILS

JUNCTION BOX DETAILS 1 OF 2

FILE NAME: SD467A.DWG

DETAIL NUMBER: 467A

NOTES:

1. ALL BOX DIMENSIONS ARE NOMINAL. EXACT CONFIGURATIONS VARY AMONG DIFFERENT MANUFACTURERS.
2. THE NOTED LID THICKNESS ARE OVERALL MINIMUMS. THE DIAMOND PATTERN FOR TYPE 1 AND 2 BOXES SHALL BE 28% MINIMUM OF OVERALL THICKNESS. THE DIAMOND PATTERN FOR TYPE 7 BOXES SHALL HAVE A MINIMUM THICKNESS OF $\frac{3}{32}$"
3. LID SUPPORT MEMBERS SHALL BE $\frac{3}{16}$" MIN. THICK STEEL C, L OR T SHAPE WELDED TO THE FRAME.
4. WHEN SPECIFIED IN THE CONTRACT, TYPE 2 AND TYPE 7 BOXES SHALL BE PROVIDED WITH 12" DEEP EXTENSION BOXES.
5. A $\frac{1}{4}$" NC X $\frac{3}{4}$" STAINLESS STEEL GROUND STUD WITH S.S. NUT SHALL BE WELDED TO THE BOTTOM OF THE LID.
6. SEE THE STANDARD SPECIFICATIONS FOR ALTERNATE USE OF REINFORCEMENT.
7. WHEN REPLACING AN EXISTING JUNCTION BOX, THE END OF EACH EXISTING CONDUIT FOR NEW FIBER OPTIC CABLE INSTALLATION SHALL BE CUT BACK AND REPLACED WITH A 45 DEGREE FACTORY BEND WITH A MINIMUM 24" BENDING RADIUS. IF NECESSARY, EXISTING CABLES SHALL BE DISCONNECTED, REMOVED, LABELED, REINSTALLED AND RECONNECTED BY CONTRACTOR. COR SHALL BE NOTIFIED AT LEAST 3 WORKING DAYS PRIOR TO ANY WORK IN A COR CABINET.
8. JUNCTION BOX PLACED IN STREET SHALL BE H-35 TRAFFIC BEARING OR HIGHER.
9. THE TYPE 7 LIDS SHALL BE GALVANIZED AND BOTH LIDS SHALL BE BONDED. HINGES SHALL ALLOW THE LID TO OPEN 180°.
10. ALL CONDUIT SHALL HAVE BELL ENDS.
11. JUNCTION BOXES WITHIN SIDEWALK SHALL HAVE NON-SKID LIDS. IKG-MEBAC1 HARSCO INDUSTRIAL.
12. EXISTING JUNCTION BOXES WITHIN SIDEWALK SHALL BE RETROFITTED WITH NON-SKID LIDS.
13. EXISTING JUNCTION BOXES THAT ARE MODIFIED INCLUDING NEW CONDUCTORS PULLED SHALL MEET CURRENT GROUNDING AND BONDING REQUIREMENTS.

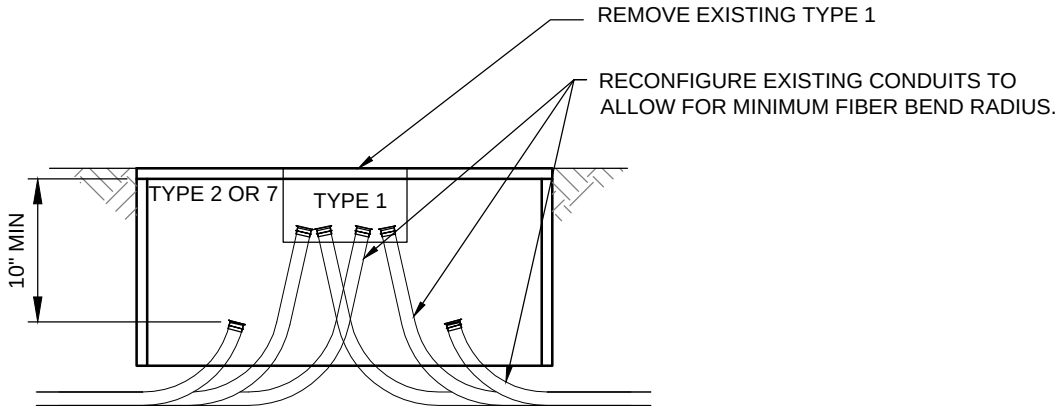

TYPE 1 CONVERSION TO TYPE 2 OR 7

NTS

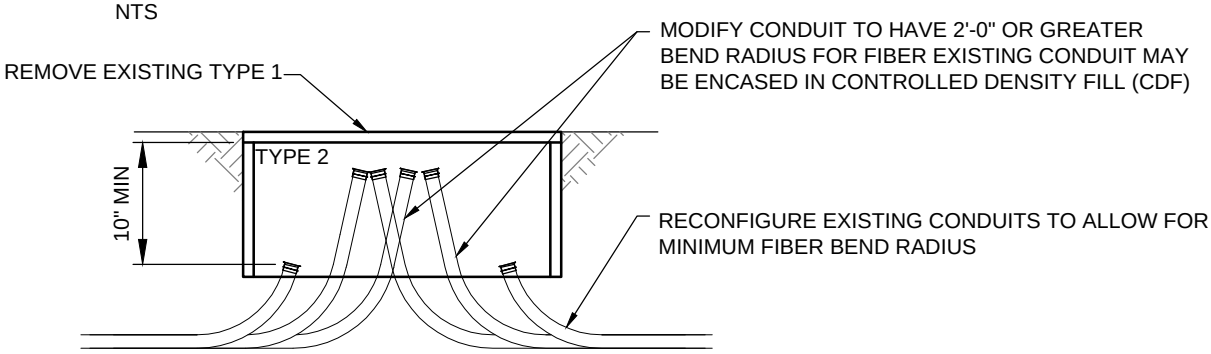

TYPE 2 RECONFIGURATION

NTS

Rob Crittenden

APPROVED BY: ROB CRITTENDEN
TRAFFIC OPERATIONS SAFETY AND ENGINEERING MANAGER

REVISION DATE: JULY 01, 2015

CityofRedmond WASHINGTON

STANDARD DETAILS

JUNCTION BOX DETAILS 2 OF 2

FILE NAME: 467B.DWG

DETAIL NUMBER: 467B

NOTE: ONLY A PORTION OF THE FIBER OPTIC CABLE IS CUT. (DO NOT CUT ALL FIBERS IN CABLE).

× = FIBER SPLICE SYMBOL

SEE PLANS AND FIBER SPLICE TABLE FOR SPECIFIC SPLICE COUNT INFORMATION.

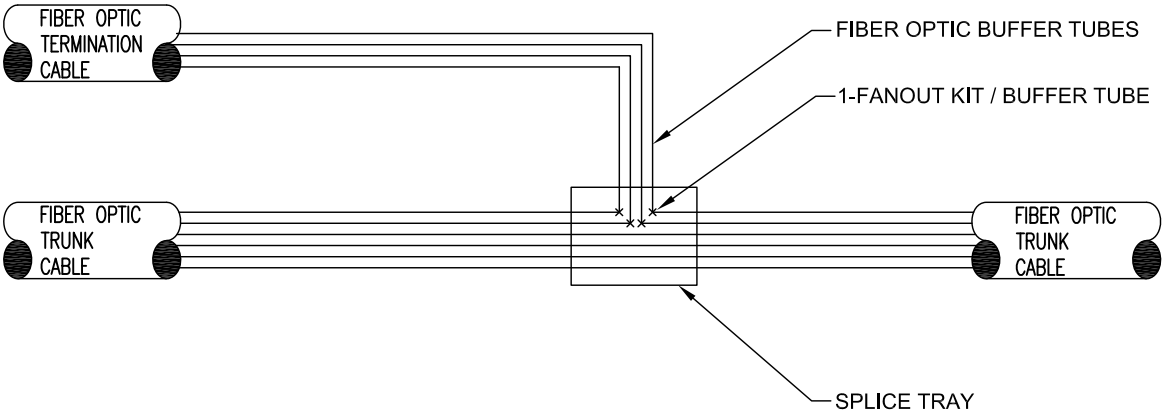

MID-SHEATH SPLICE SCHEMATIC

NTS

Rob Crittenden

APPROVED BY: ROB CRITTENDEN
TRAFFIC OPERATIONS SAFETY AND ENGINEERING MANAGER

REVISION DATE: JULY 01, 2014

CityofRedmond WASHINGTON

STANDARD DETAILS

FIBER SPLICE AND STORAGE DETAILS 1 OF 3

FILE NAME: SD468A.DWG

DETAIL NUMBER: **468A**

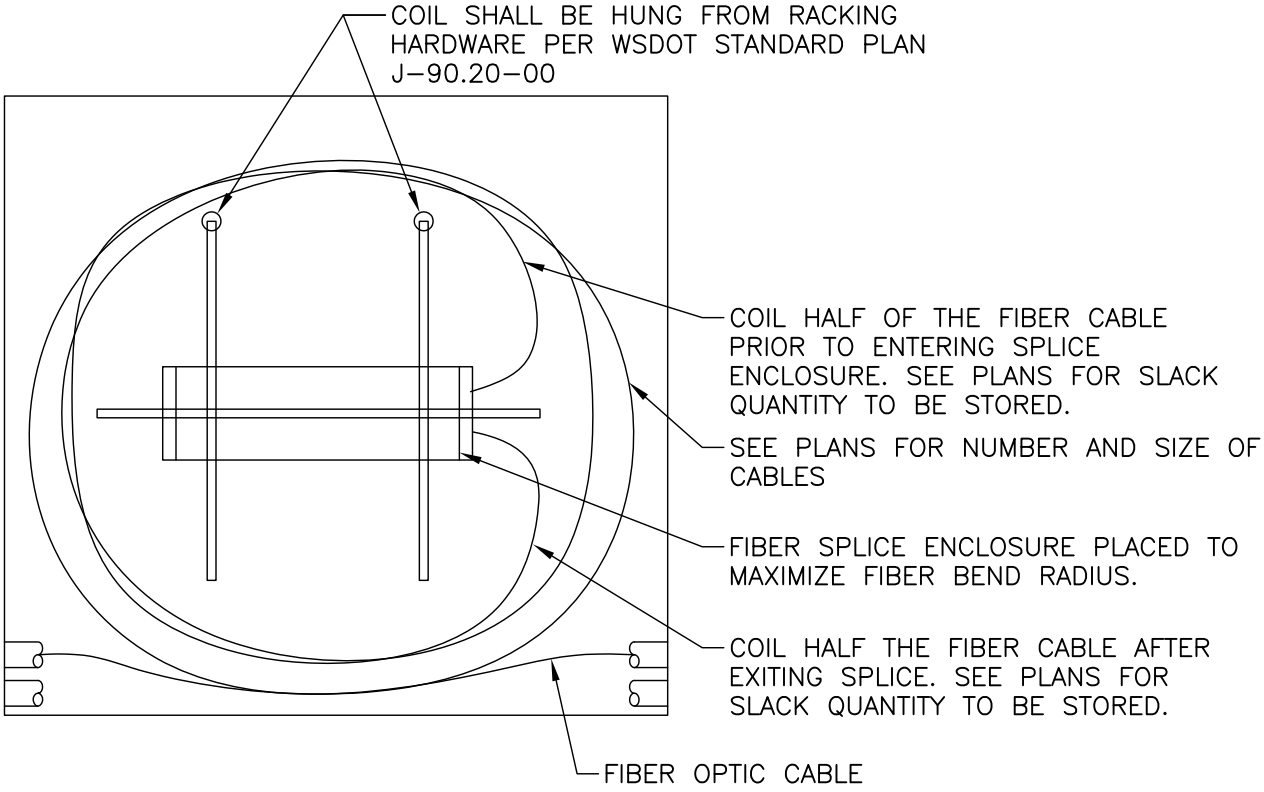

FIBER SPLICE ENCLOSURE AND CABLE STORAGE

NTS

Rob Crittenden APPROVED BY: ROB CRITTENDEN TRAFFIC OPERATIONS SAFETY AND ENGINEERING MANAGER	CityofRedmond WASHINGTON	STANDARD DETAILS **FIBER SPLICE AND STORAGE DETAILS 2 OF3**
REVISION DATE: JULY 01, 2014		FILE NAME: SD468B.DWG / DETAIL NUMBER: **468B**

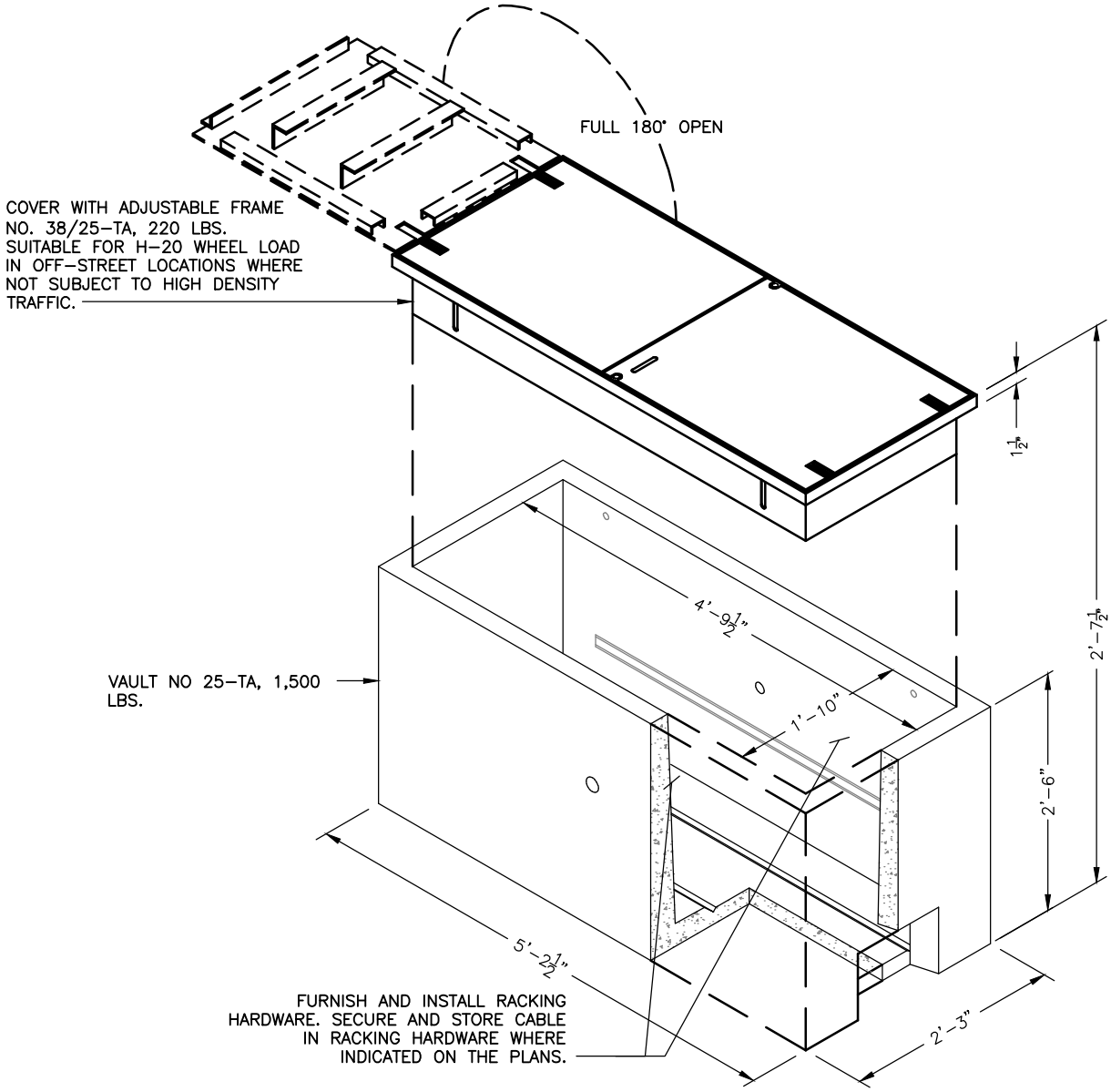

25-TA VAULT

Rob Crittenden

APPROVED BY: ROB CRITTENDEN
TRAFFIC OPERATIONS SAFETY AND ENGINEERING MANAGER

REVISION DATE: JULY 01, 2015

CityofRedmond WASHINGTON

STANDARD DETAILS

FIBER SPLICE AND STORAGE DETAILS 3 OF 3

FILE NAME: SD468C.DWG

DETAIL NUMBER: 468C

PAINT SPECIFICATIONS: ALL CAST IRON AND STEEL LIGHT POLE PARTS ARE TO BE FACTORY POLYESTER POWDER COATED WITH PEKING BLUE, ENDURASHIELD TREMEC #F073B2705A – 8556A, OR APPROVED EQUAL.

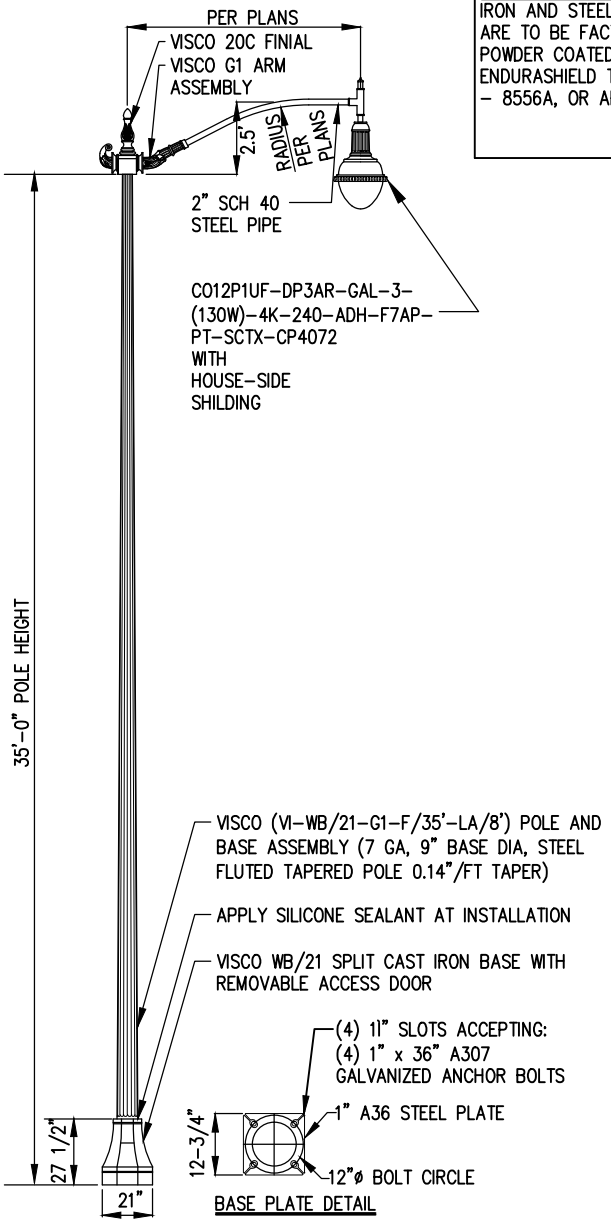

ROADWAY LUMINARE AND POLE

NTS

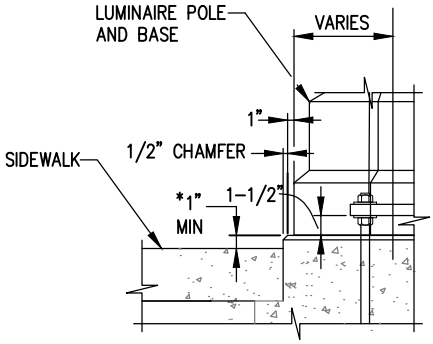

* TOP OF FOUNDATION TO BE LEVEL, 1" MIN HEIGHT ABOVE TOP OF SIDEWALK

TOP OF FOUNDATION DETAIL

NTS

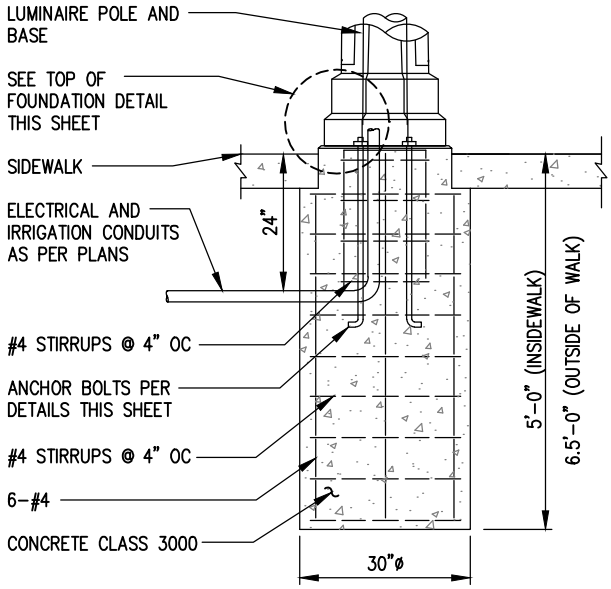

LUMINARE POLE AND FOUNDATION DETAIL

NTS

NOTES:

1. HAND HOLE ACCESS DOOR SHALL BE MOUNTED AT 270°
2. HAND HOLE ACCESS DOOR FOR RECEPTACLE SHALL BE MOUNTED AT 90°

Rob Crittenden

APPROVED BY: ROB CRITTENDEN
TRAFFIC OPERATIONS SAFETY AND ENGINEERING MANAGER

REVISION DATE: JULY 01, 2015

CityofRedmond WASHINGTON

STANDARD DETAILS

ROADWAY LUMINAIRE AND POLE

FILE NAME: SD470.DWG

DETAIL NUMBER: 470

PAINT SPECIFICATIONS: ALL CAST IRON AND STEEL LIGHT POLE PARTS ARE TO BE FACTORY POLYESTER POWDER COATED WITH PEKING BLUE, ENDURASHIELD TREMEC #F073B2705A – 8556A, OR APPROVED EQUAL.

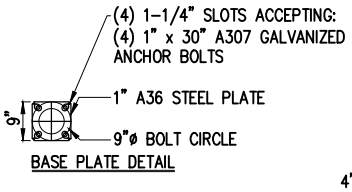

BASE PLATE DETAIL

LEGEND:
* HANDHOLE ACCESS DOOR SHALL BE MOUNTED AT 270°
* HANDHOLE ACCESS DOOR FOR RECEPTACLE SHALL BE MOUNTED AT 90°
* CARFLEX CONDUIT SHALL BE MOUNTED AT 180°

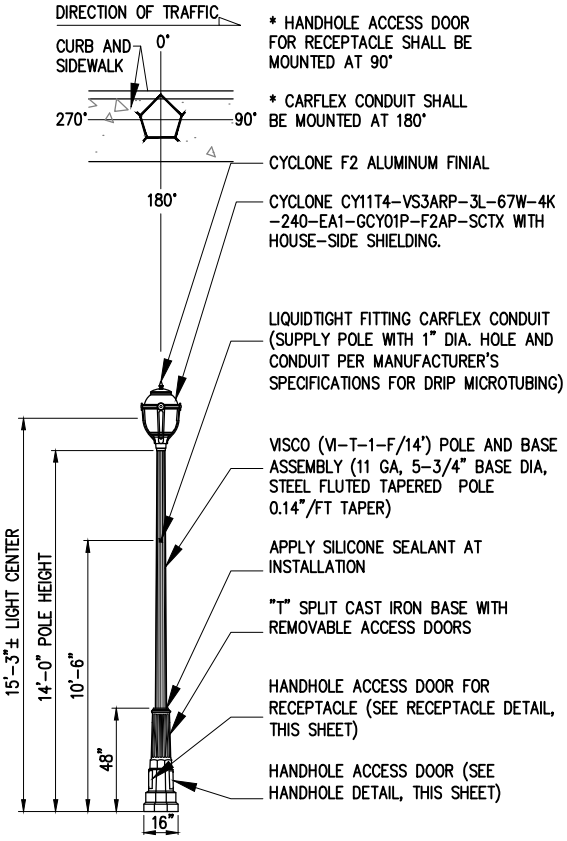

PEDESTRIAN LUMINAIRE AND POLE

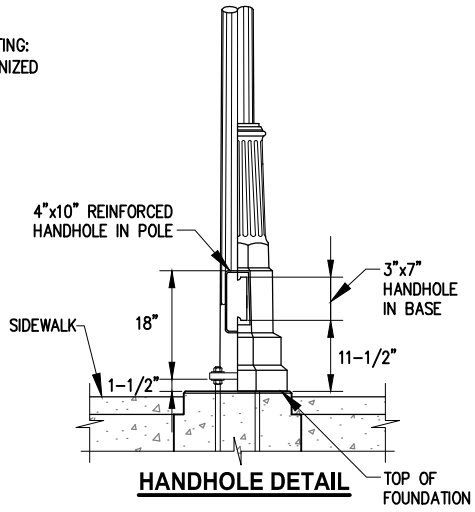

HANDHOLE DETAIL

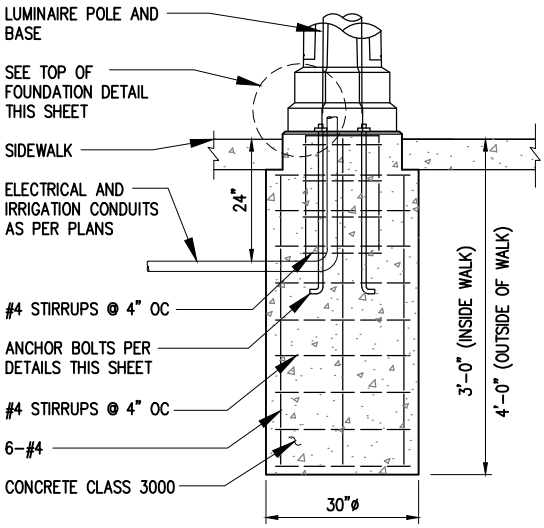

LUMINAIRE POLE FOUNDATION DETAIL

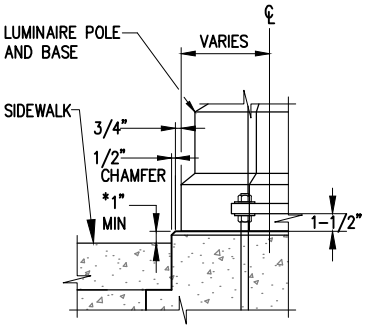

* TOP OF FOUNDATION TO BE LEVEL, 1" MIN HEIGHT ABOVE TOP OF SIDEWALK

TOP OF FOUNDATION DETAIL

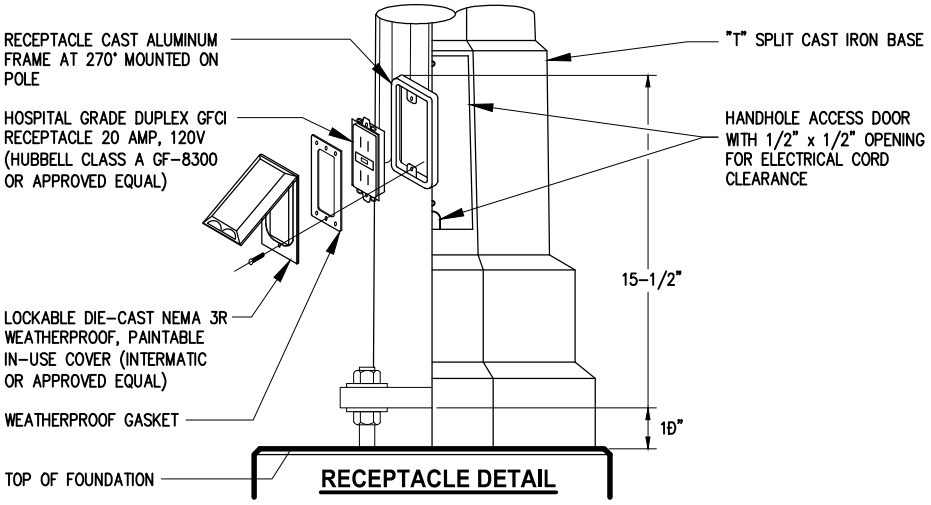

RECEPTACLE DETAIL

Rob Crittenden

APPROVED BY: ROB CRITTENDEN
TRAFFIC OPERATIONS SAFETY AND ENGINEERING MANAGER

REVISION DATE: JULY 01, 2015

CityofRedmond WASHINGTON

STANDARD DETAILS

PEDESTRIAN LUMINAIRE AND POLE

FILE NAME: SD471.DWG

DETAIL NUMBER: 471

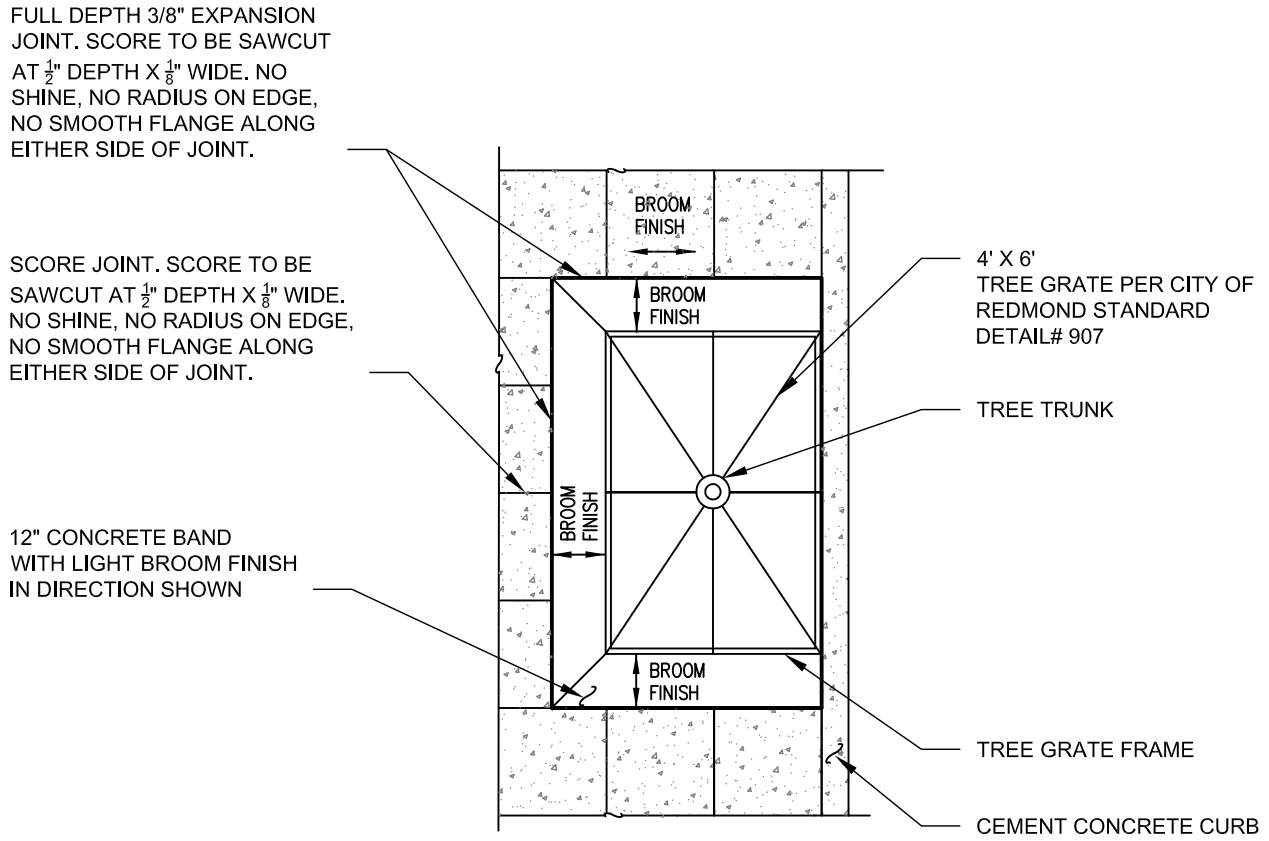

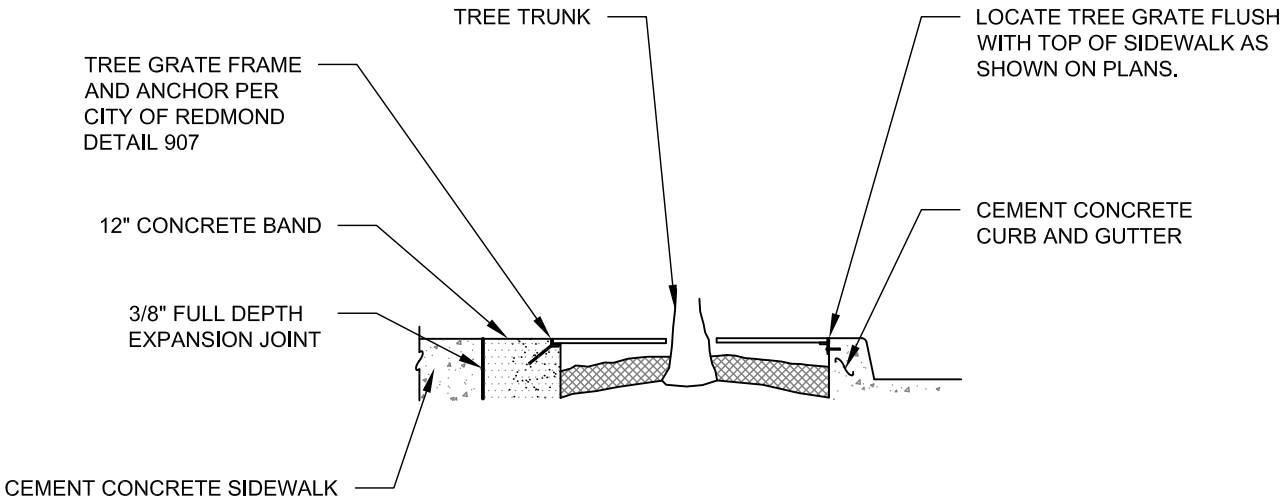

NOTES:

1. ALL SIDEWALK SCORING FOLLOWS AN APPROXIMATE 2-FOOT SQUARE GRID. HOLD TREE GRATE AND LIGHT POLE LOCATIONS TO TWO-FOOT DIMENSION.
2. SEE CITY OF REDMOND STANDARD DETAIL #907 FOR TREE GRATE INSTALLATION.

APPROVED BY: DONALD CAIRNS TRANSPORTATION PLANNING AND ENGINEERING MANAGER	CityofRedmond WASHINGTON	STANDARD DETAILS **TREE GRATE DETAIL WITH FRAME**
REVISION DATE: JULY 01, 2014		FILE NAME: SD473.DWG — DETAIL NUMBER: **473**

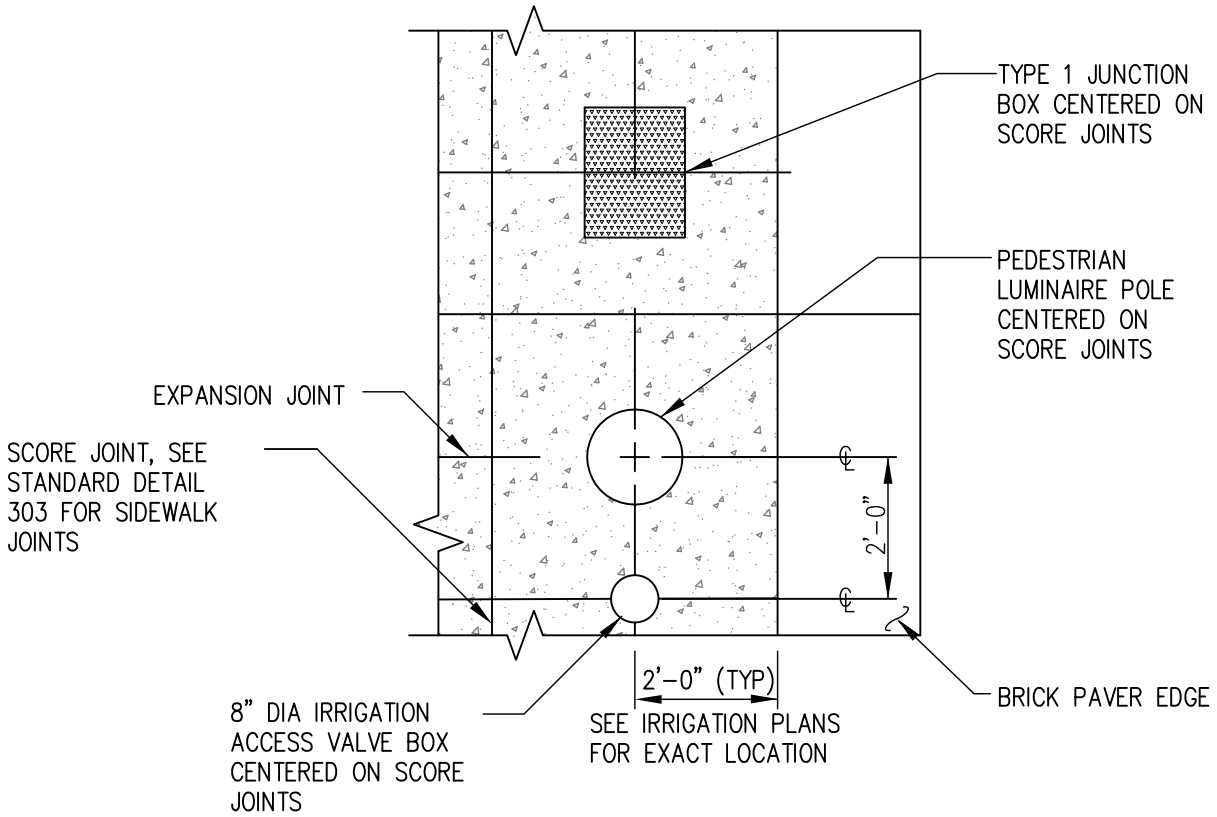

PEDESTRIAN LUMINAIRE LOCATION AND PAVEMENT SCORING

NTS

APPROVED BY: DONALD CAIRNS
TRANSPORTATION PLANNING AND ENGINEERING MANAGER

REVISION DATE: JULY 01, 2014

CityofRedmond WASHINGTON

STANDARD DETAILS

PEDESTRIAN LUMINAIRE LOCATION AND PAVEMENT SCORING

FILE NAME: SD474.DWG

DETAIL NUMBER: **474**

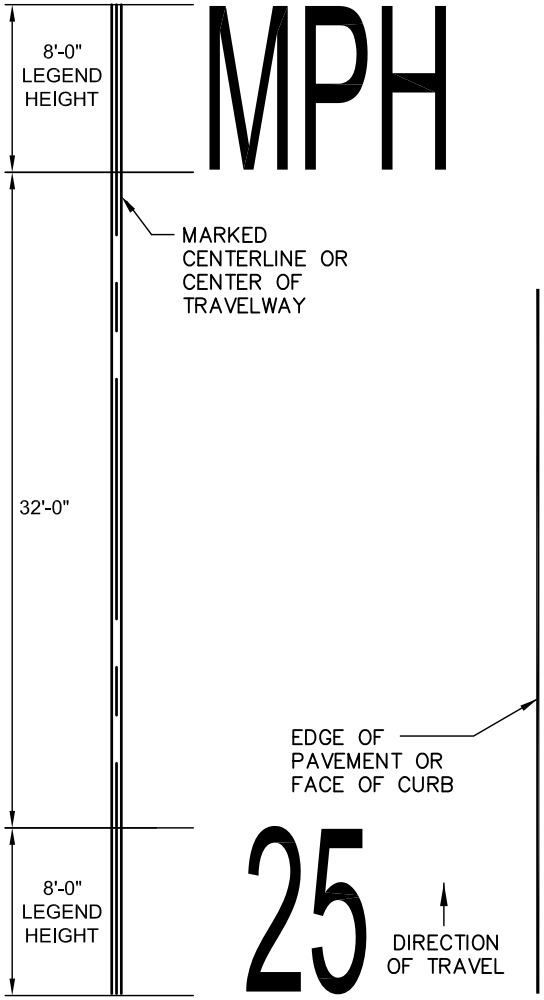

25 MPH LEGEND
NTS

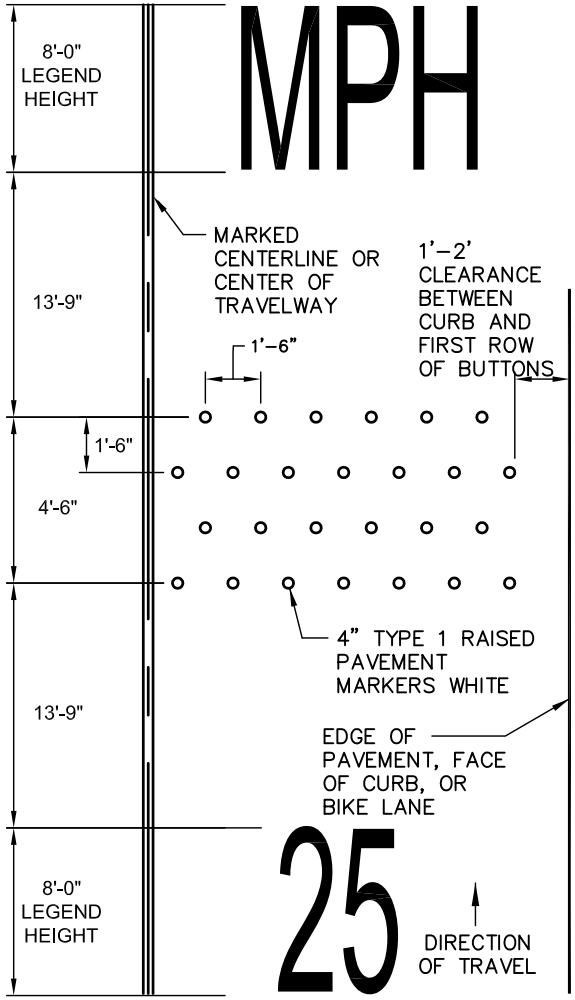

RUMBLE STRIP WITH 25 MPH LEGEND
NTS

NOTES:

1. PLACE RUMBLE STRIP ACROSS ENTIRE ROADWAY WIDTH IF NO CENTERLINE EXISTS.
2. LEGEND MATERIAL USED SHALL BE THERMOPLASTIC, HOT APPLIED OR HEAT FUSED PREFORMED (90 MIL. MIN.), UNLESS APPROVED BY THE ENGINEER.

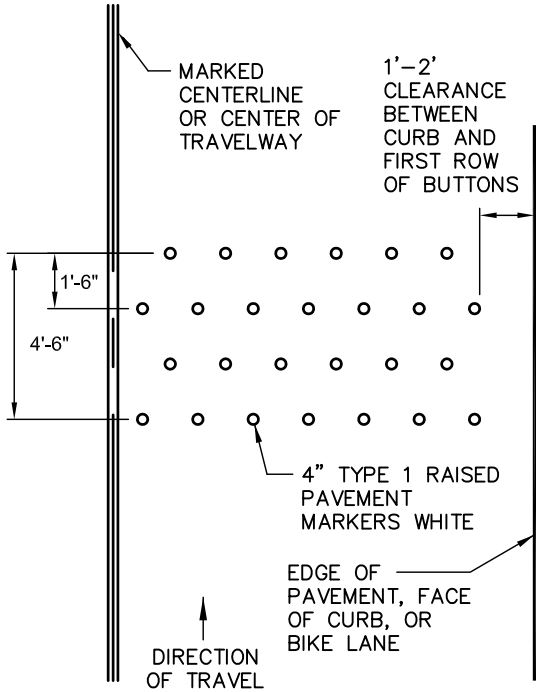

RUMBLE STRIP
NTS

Rob Crittenden

APPROVED BY: ROB CRITTENDEN
TRAFFIC OPERATIONS SAFETY AND ENGINEERING MANAGER

REVISION DATE: JULY 01, 2014

City of Redmond WASHINGTON

STANDARD DETAILS

RUMBLE STRIP AND 25 MPH LEGEND

FILE NAME: SD476.DWG

DETAIL NUMBER: **476**

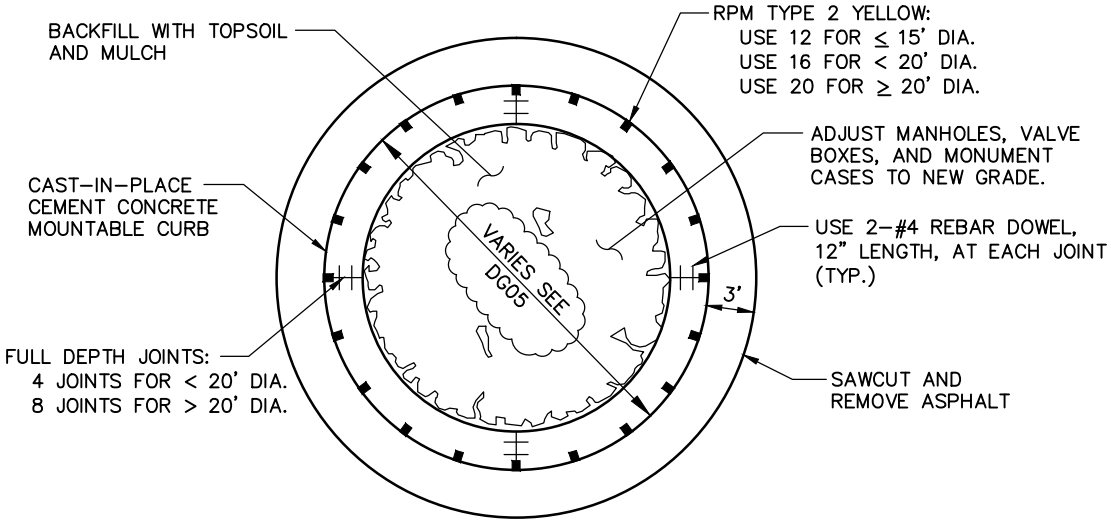

TYPICAL TRAFFIC CIRCLE

NTS

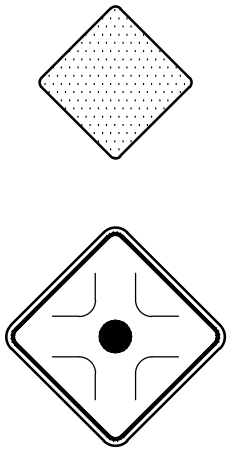

18" X 18" (OMI-3) YELLOW HIGH INTENSITY TYPE 1 OBJECT MARKER PLACED IN TRAFFIC CIRCLE FOR EACH APPROACH. ALL SIGNS TO BE MOUNTED ON SINGLE POST. LOCATION TO BE DETERMINED BY ENGINEER. SIGN HEIGHT: 5' FROM BOTTOM OF LOWER SIGN TO STREET SURFACE.

SIGN MATERIAL: 3D DIAMOND GRADE DG³

30" X 30" BLACK ON YELLOW PLACED 75' TO 100' BACK FROM TRAFFIC CIRCLE ON EACH APPROACH. SEE SD426D FOR POST TYPE AND INSTALLATION.

SIGN MATERIAL: 3D DIAMOND GRADE DG³

SIGNING

NTS

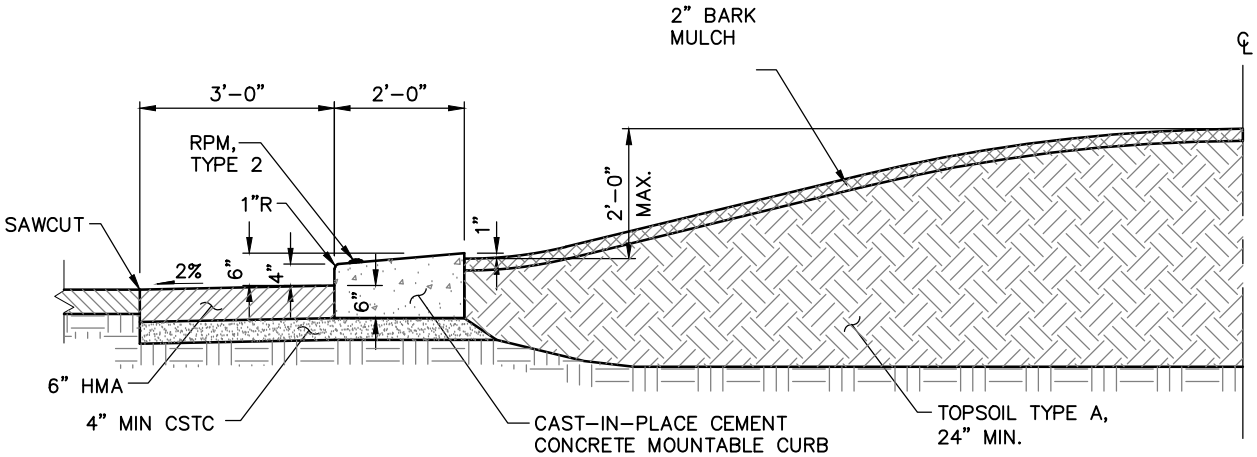

TYPICAL SECTION

NTS

NOTES:

1. LANDSCAPING TO BE DETERMINED BY TRANSPORTATION/PARKS STAFF.
2. MONUMENT PROTECTION/PRESERVATION: NOTIFY CITY ENGINEER PRIOR TO MONUMENT ADJUSTMENT. RAISE MONUMENT TO GRADE IN APPROPRIATE CASING.

Rob Crittenden

APPROVED BY: ROB CRITTENDEN
TRAFFIC OPERATIONS SAFETY AND ENGINEERING MANAGER

REVISION DATE: JULY 01, 2015

City of Redmond WASHINGTON

STANDARD DETAILS

TRAFFIC CIRCLES DETAILS

FILE NAME: SD478.DWG

DETAIL NUMBER: 478

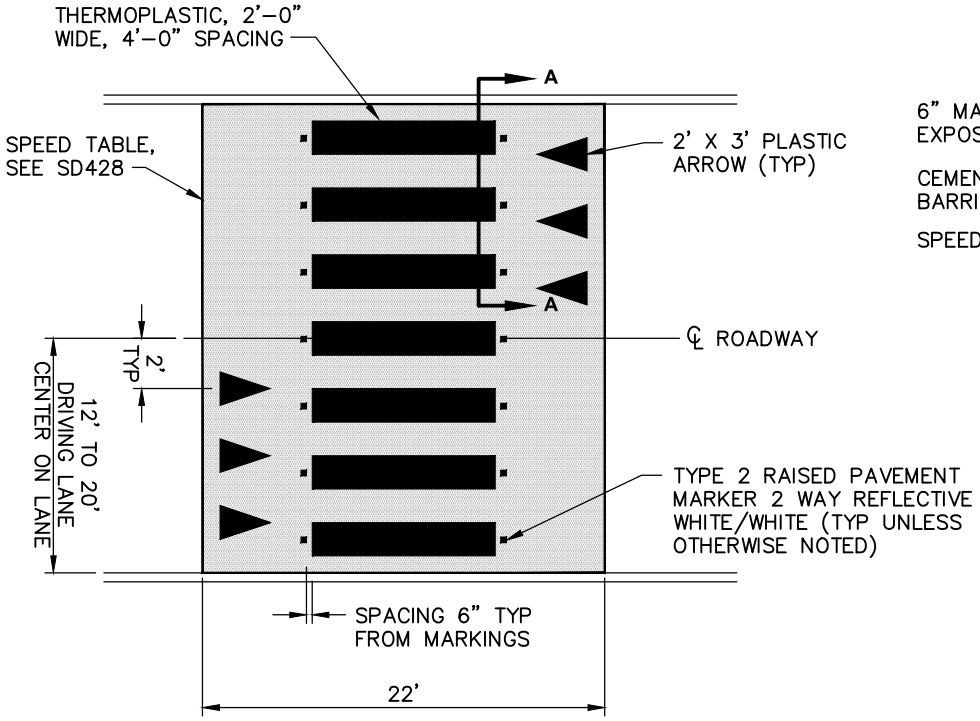

MARKING DETAIL

NTS

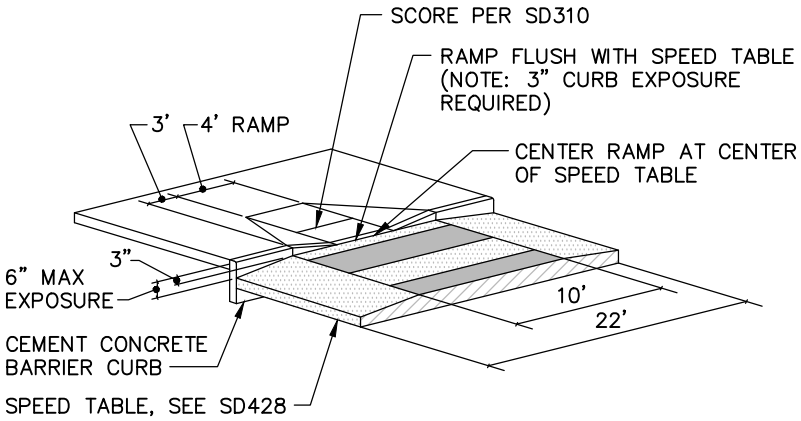

TRANSITION FROM TYPE 1 CURB RAMP TO RAISED CROSSWALK

NTS

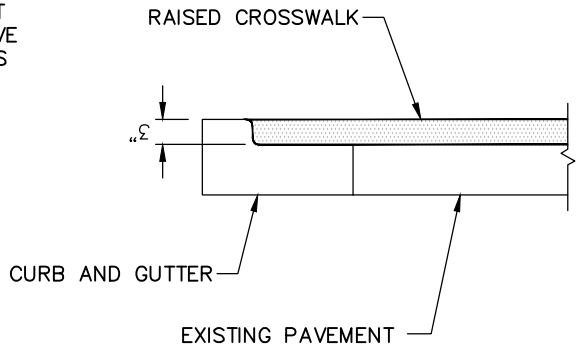

SECTION A-A

NTS

STANDARD DETAILS

RAISED CROSSWALK

APPROVED BY: ROB CRITTENDEN
TRAFFIC OPERATIONS SAFETY AND ENGINEERING MANAGER

REVISION DATE: JULY 01, 2015

City of Redmond WASHINGTON

FILE NAME: SD479.DWG

DETAIL NUMBER: 479

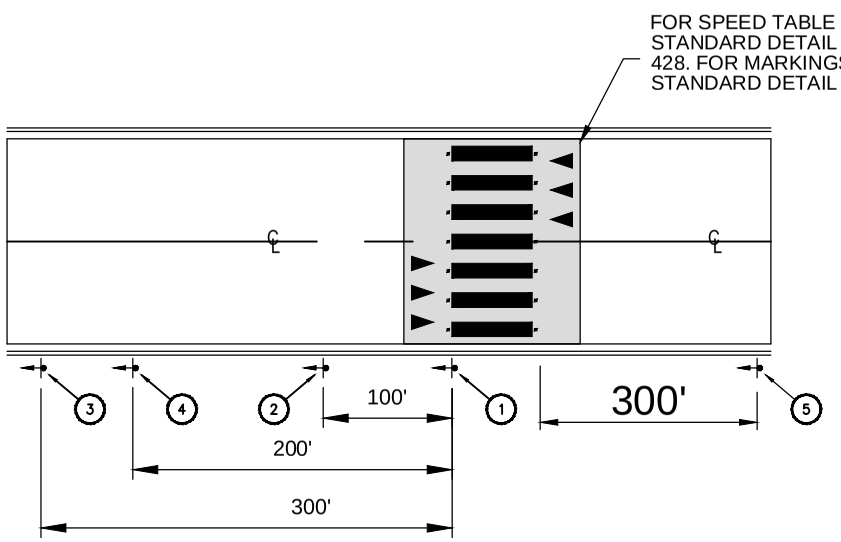

WITHIN SCHOOL SPEED ZONE

NTS

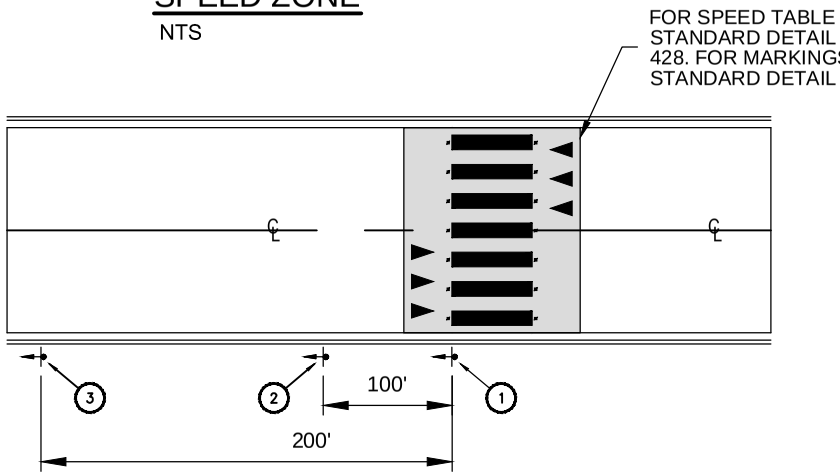

OUTSIDE SCHOOL SPEED ZONE

NTS

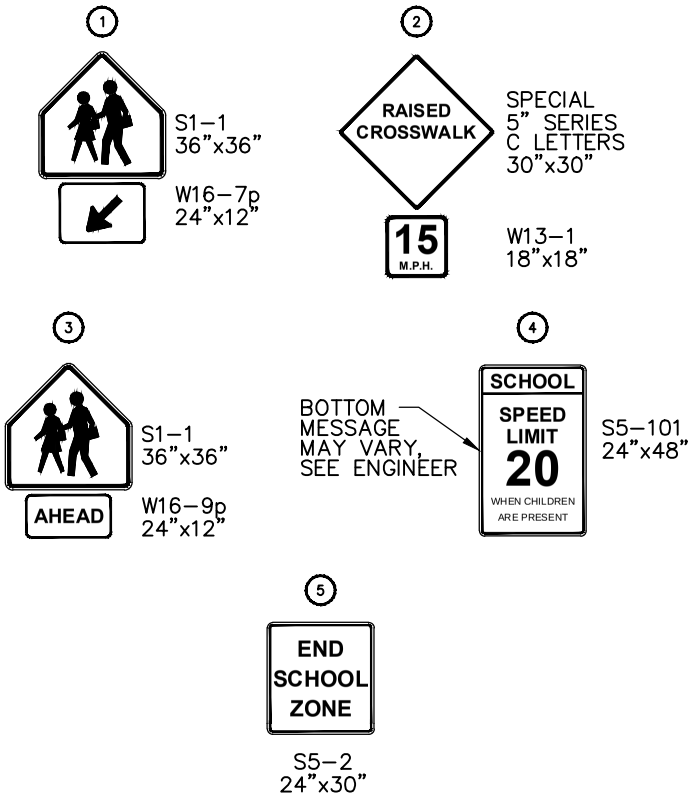

NOTES:

1. SIGNS 1, 2, 3, & THE "SCHOOL" LEGEND ON 4 TO HAVE FLUORESCENT YELLOW–GREEN BACKGROUND WITH BLACK LEGEND AND BORDER. SIGN MATERIAL: 3M DIAMOND GRADE DG³
2. DIAGONAL ARROW POINTING DOWNWARD TO CROSSWALK.
3. SIGN 1: INSTALL TWO SIGNS BACK TO BACK ON SAME POST.
4. SIGNS AND MARKINGS TYPICAL BOTH DIRECTIONS.

SIGN DETAIL

NTS

Rob Crittenden

APPROVED BY: ROB CRITTENDEN
TRAFFIC OPERATIONS SAFETY AND ENGINEERING MANAGER

REVISION DATE: JULY 01, 2015

City of Redmond Washington

STANDARD DETAILS

RAISED SCHOOL CROSSWALK SIGNING

FILE NAME: SD480.DWG

DETAIL NUMBER: 480

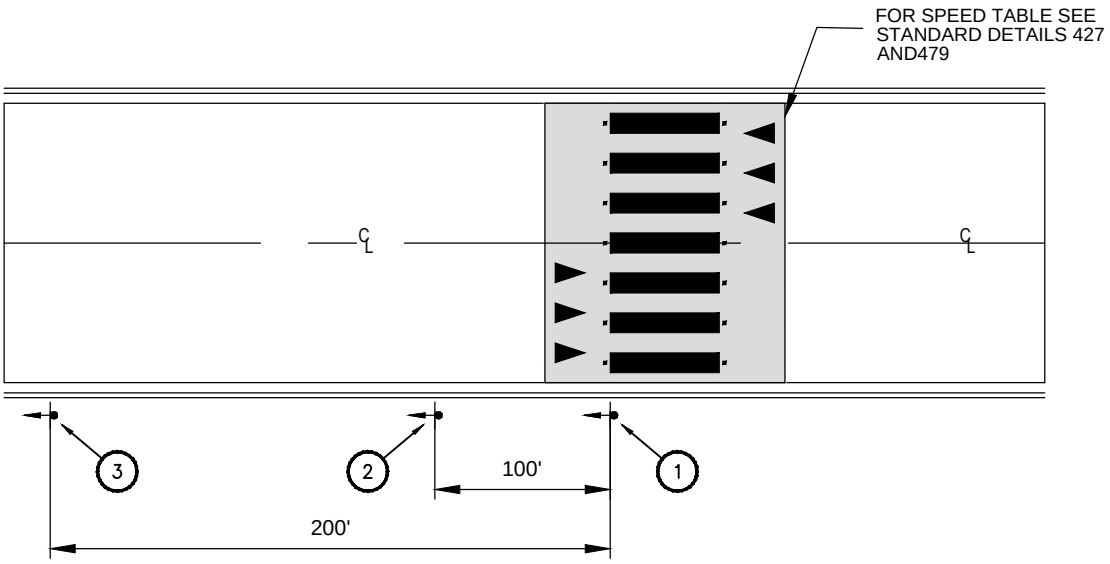

SIGNING PLACEMENT

NTS

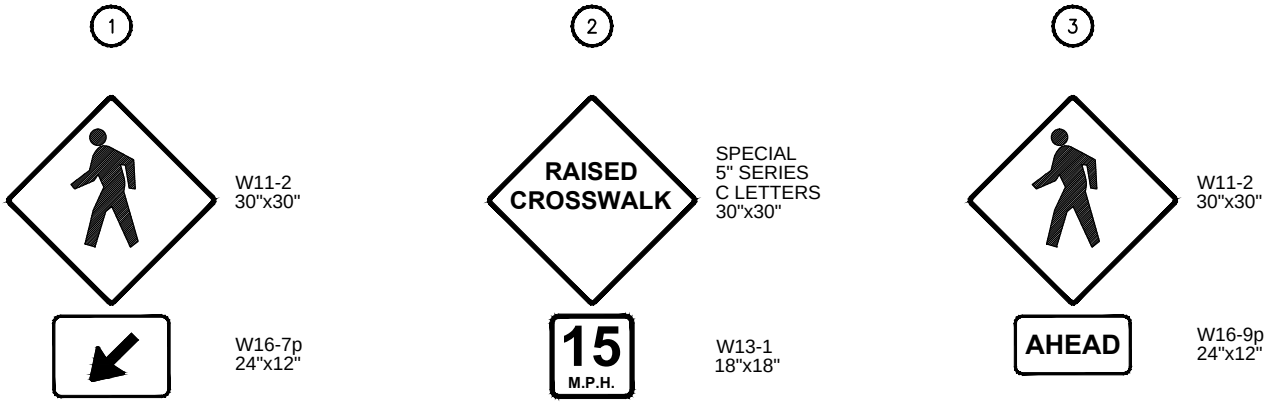

SIGNING DETAIL

NTS

NOTES:

1. SIGNS HAVE FLUORESCENT YELLOW GREEN BACKGROUND WITH BLACK LEGEND AND BORDER. SIGN MATERIAL: 3M DIAMOND GRADE DG³
2. DIAGONAL ARROW POINTING DOWNWARD TOWARD CROSSWALK.
3. SIGN (1): INSTALL 2 SIGNS BACK TO BACK ON SAME POST.
4. SIGNS AND MARKINGS TYPICAL BOTH TYPICAL DIRECTIONS.

Rob Crittenden

APPROVED BY: ROB CRITTENDEN
TRAFFIC OPERATIONS SAFETY AND ENGINEERING MANAGER

REVISION DATE: JULY 01, 2015

CityofRedmond
WASHINGTON

STANDARD DETAILS

RAISED CROSSWALK SIGNING

FILE NAME: SD481.DWG

DETAIL NUMBER: 481

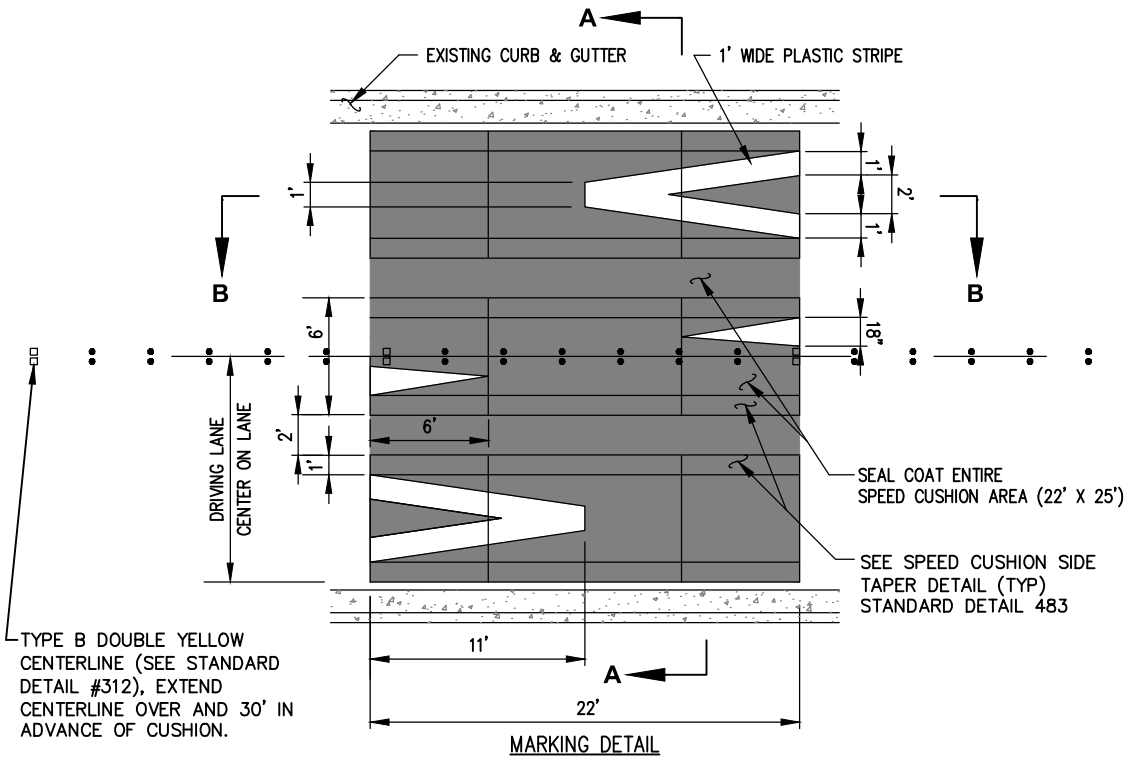

MARKING DETAIL

SPEED CUSHION

NTS

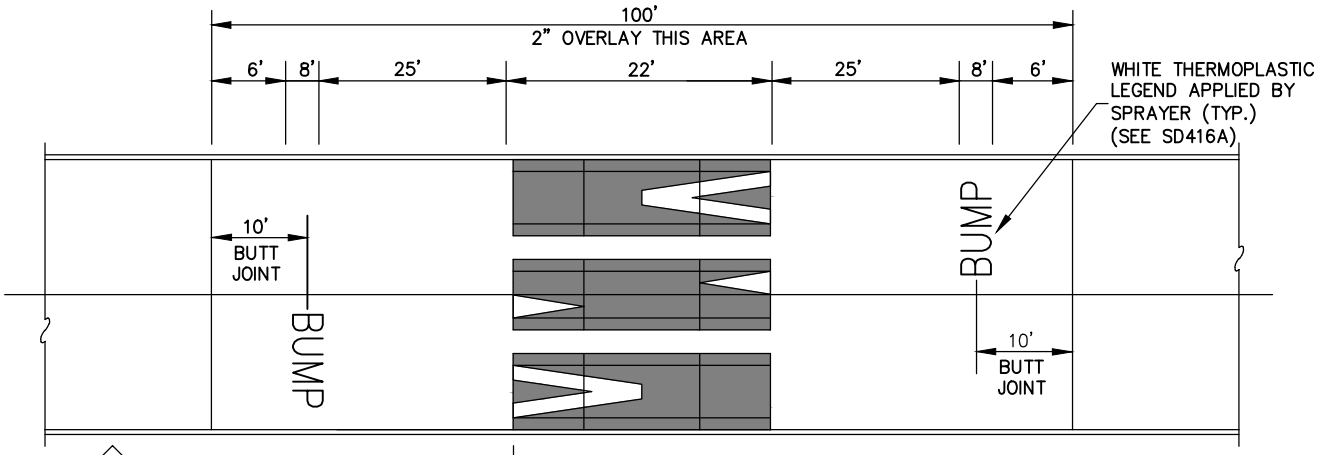

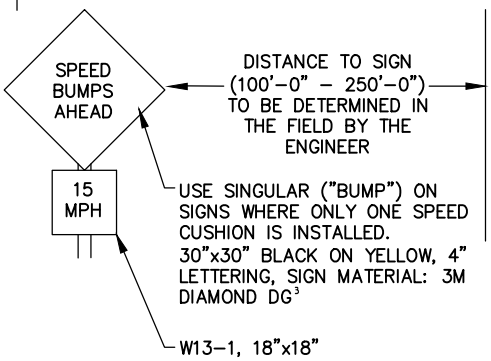

NOTES:

1. SIGNS & MARKINGS TYPICAL BOTH DIRECTIONS.
2. SEE "POST MOUNTED SIGN" STANDARD DRAWING 426(C) OR (D).
3. A TEMPLATE MUST BE USED IN SHAPING SPEED TABLE.
4. SPEED TABLE MUST BE MADE IN TWO LIFTS.
5. 2" OVERLAY NOT REQUIRED FOR NEW PAVEMENT OR EXISTING PAVEMENT DETERMINED TO BE IN GOOD CONDITION BY THE ENGINEER.

Rob Crittenden APPROVED BY: ROB CRITTENDEN TRAFFIC OPERATIONS SAFETY AND ENGINEERING MANAGER	CityofRedmond WASHINGTON	STANDARD DETAILS SPEED CUSHION (1 OF 2)
REVISION DATE: JULY 01, 2015		FILE NAME: SD482.DWG / DETAIL NUMBER: 482

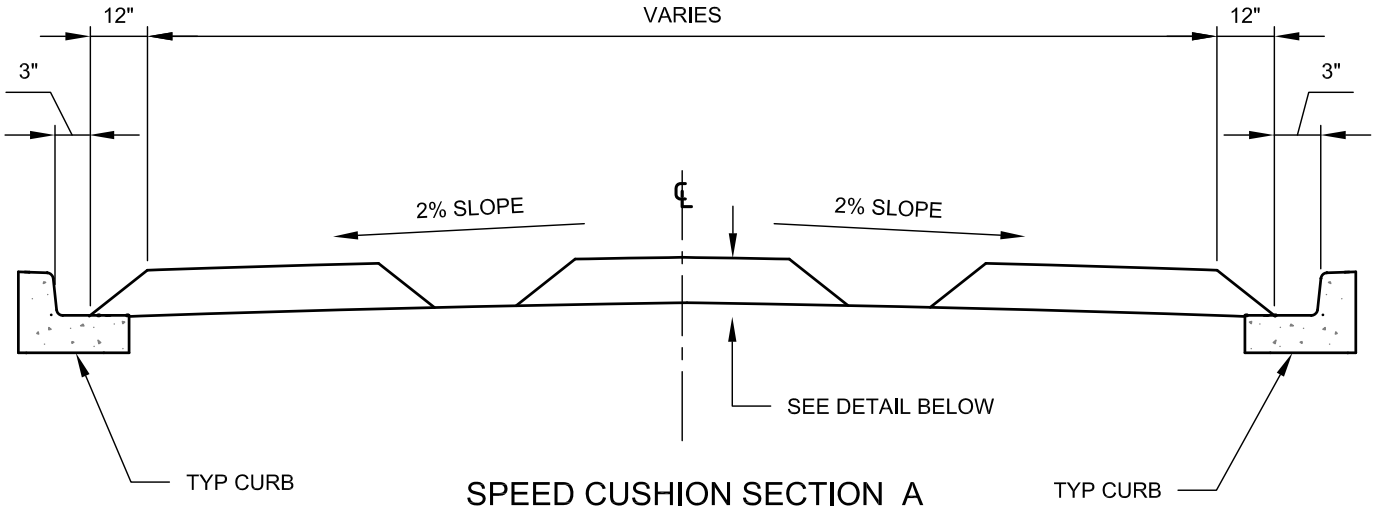

SPEED CUSHION SECTION A

NTS

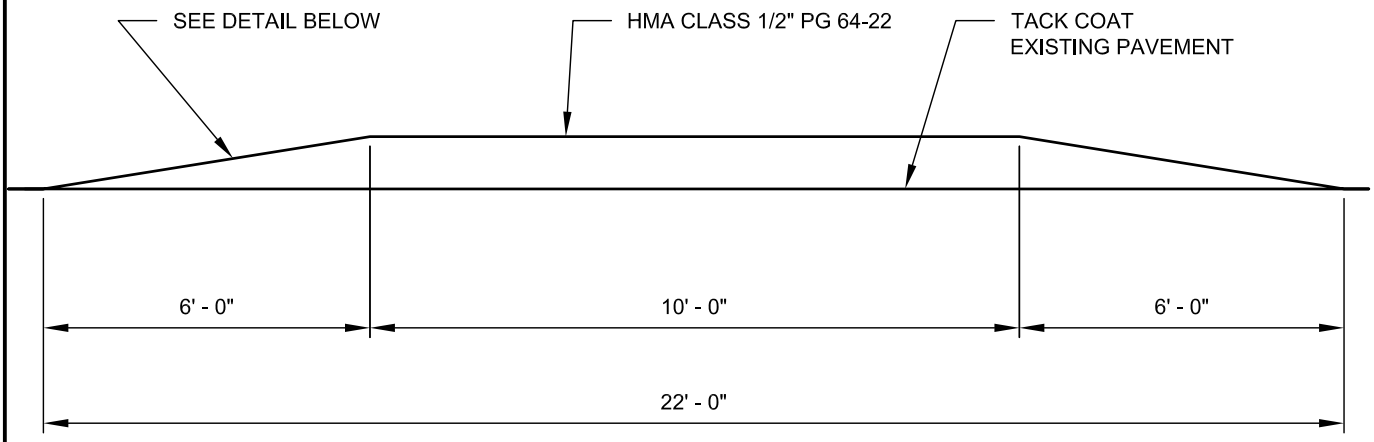

SPEED CUSHION SECTION B

NTS

0	0.64	1.22	1.75	2.22	2.64	3.00	3.31	3.56	3.75	3.89	3.97	4.00"	← 4" SPEED CUSHION
0	0.56	1.07	1.53	1.94	2.31	2.63	2.89	3.11	3.28	3.40	3.48	3.50"	← 3.5" SPEED CUSHION
0	0.48	0.92	1.31	1.67	1.98	2.25	2.48	2.67	2.81	2.92	2.96	3.00"	← 3" SPEED CUSHION

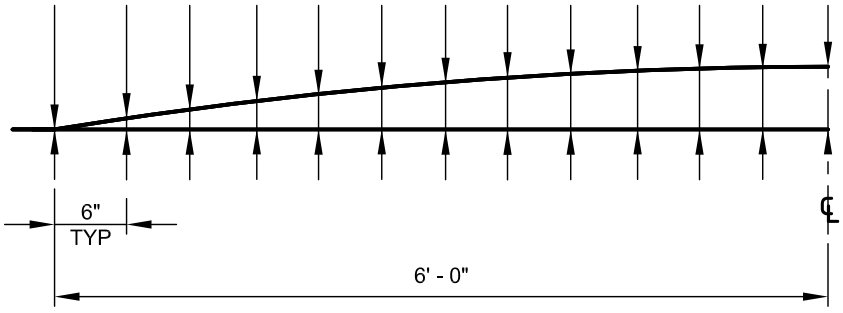

SPEED CUSHION EDGE (TYP)
COMPACTED DEPTHS

NTS

Rob Crittenden

APPROVED BY: ROB CRITTENDEN
TRAFFIC OPERATIONS SAFETY AND ENGINEERING MANAGER

REVISION DATE: JULY 01, 2014

CityofRedmond
WASHINGTON

STANDARD DETAILS

SPEED CUSHION
(2 OF 2)

FILE NAME: SD483.DWG

DETAIL NUMBER: **483**

OPTIONAL PLACARD FOR THE FOLLOWING:

"THIS SIDE OF STREET"
"BETWEEN SIGNS"
"NORTH OF HERE"
"BOTH SIDES OF STREET"

NOTES:

1. POST INSTALLED PER DETAIL 425C (OR 426D).
2. PLACARD OPTIONS DETERMINED BY THE CITY TRAFFIC ENGINEER OR FIRE CODE OFFICIAL.
3. RED LETTERS ON WHITE BACKGROUND.
4. SIGN MATERIAL: 3M DIAMOND GRADE DG³.

APPROVED BY: TODD SHORT ASSISTANT FIRE MARSHAL	CityofRedmond WASHINGTON	STANDARD DETAILS **FIRE LANE SIGN**
REVISION DATE: JULY 01, 2014		FILE NAME: SD499.DWG — DETAIL NUMBER: **499**