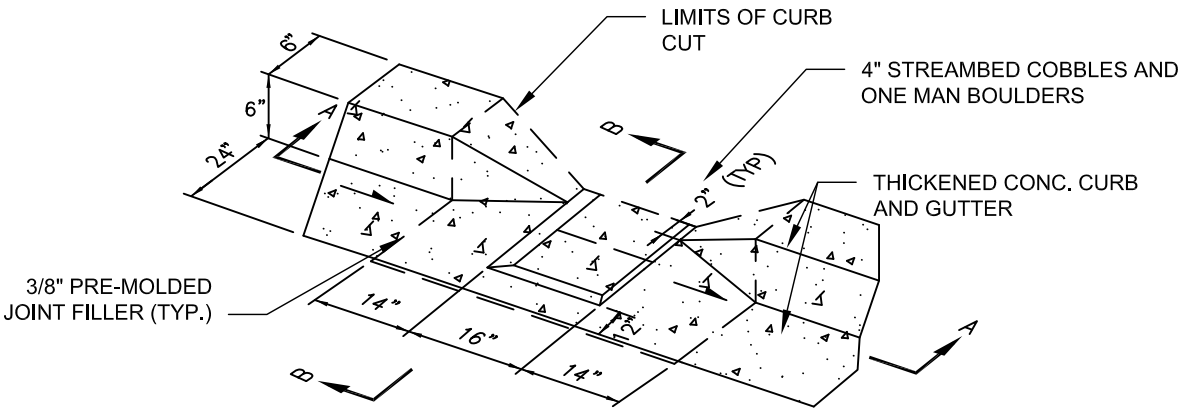


## SIDE CURB CUT DETAIL A

NTS

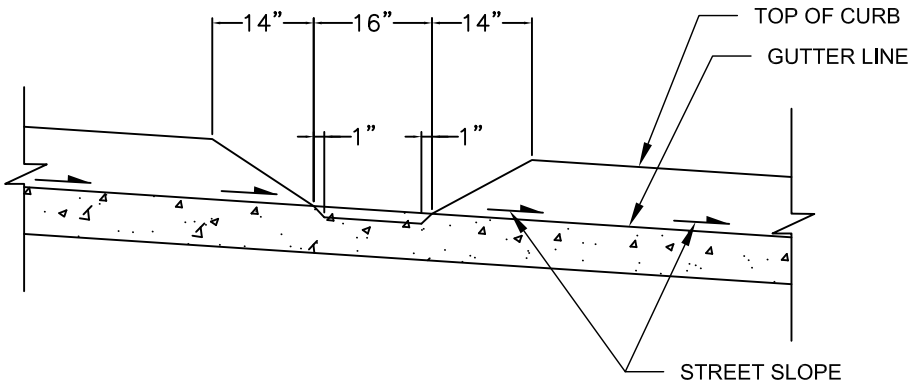


## CURB CUT TYPE 2 SECTION A-A

NTS

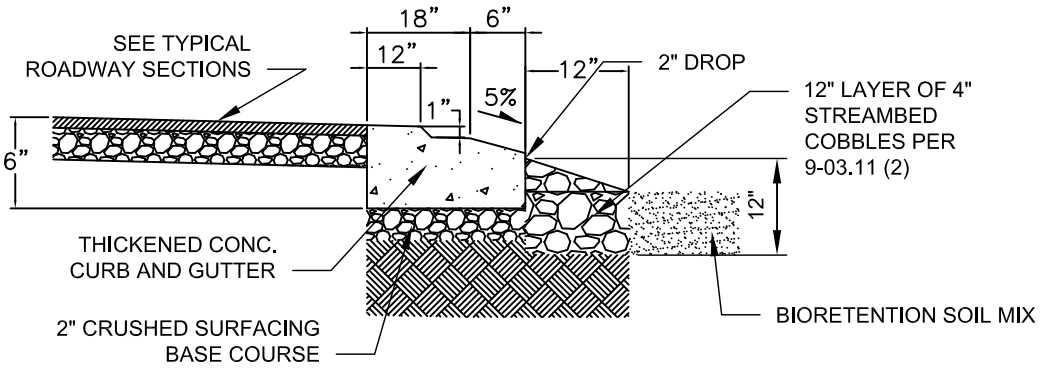


## SIDE CURB CUT SECTION B-B

NTS

Gary M. Schimek

APPROVED BY: GARY M. SCHIMEK
NATURAL RESOURCES/STORMWATER ENGINEERING MANAGER

REVISION DATE: JULY 01, 2015

CityofRedmond WASHINGTON

STANDARD DETAILS

**BIORETENTION SIDE CURB CUT**

FILE NAME: SD665.DWG

DETAIL NUMBER: **665**