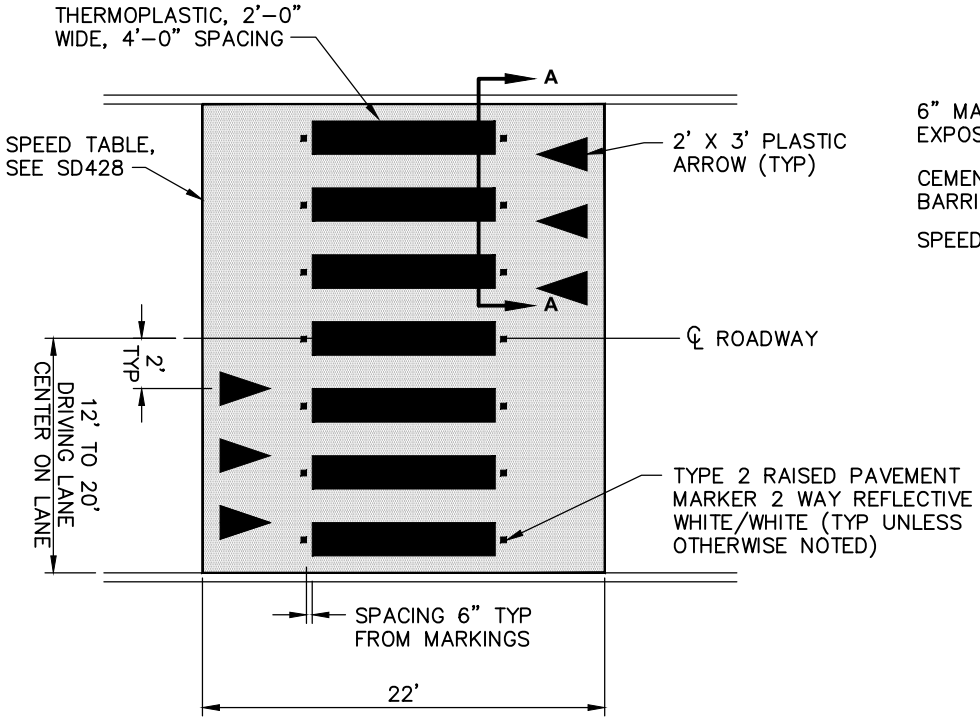

MARKING DETAIL

NTS

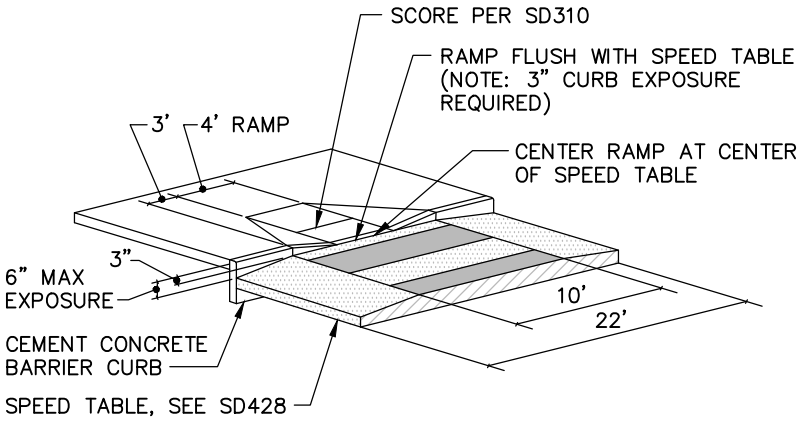

TRANSITION FROM TYPE 1 CURB RAMP TO RAISED CROSSWALK

NTS

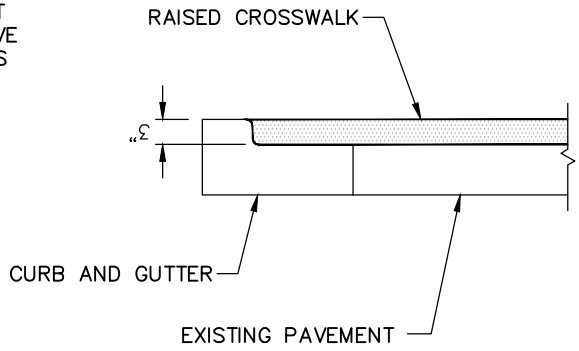

SECTION A-A

NTS

STANDARD DETAILS

RAISED CROSSWALK

APPROVED BY: ROB CRITTENDEN
TRAFFIC OPERATIONS SAFETY AND ENGINEERING MANAGER

REVISION DATE: JULY 01, 2015

City of Redmond WASHINGTON

FILE NAME: SD479.DWG

DETAIL NUMBER: 479