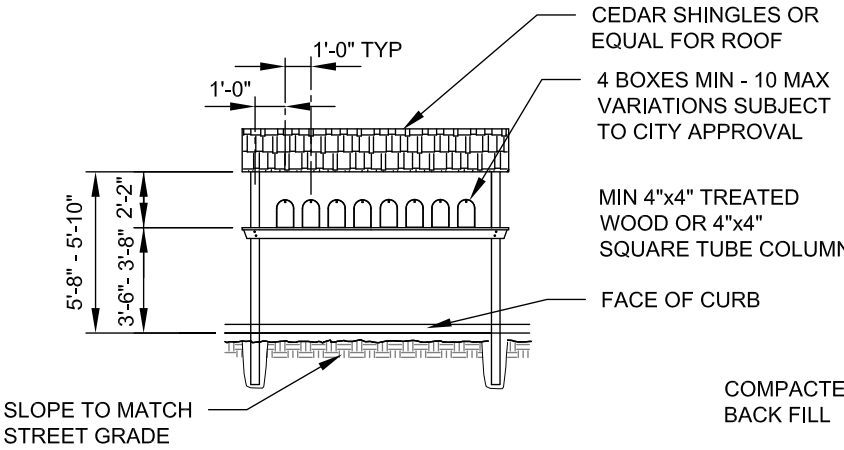

ELEVATION

NTS

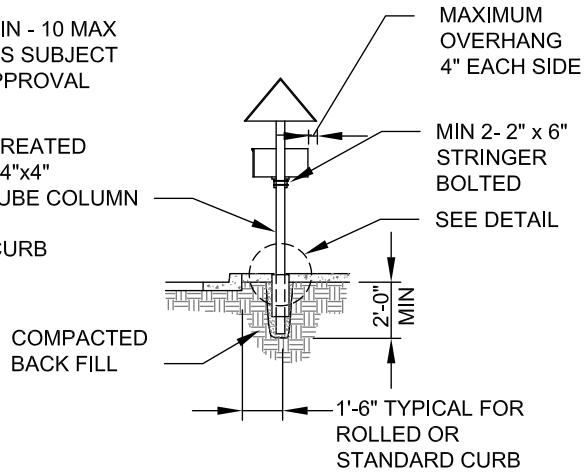

ELEVATION

NTS

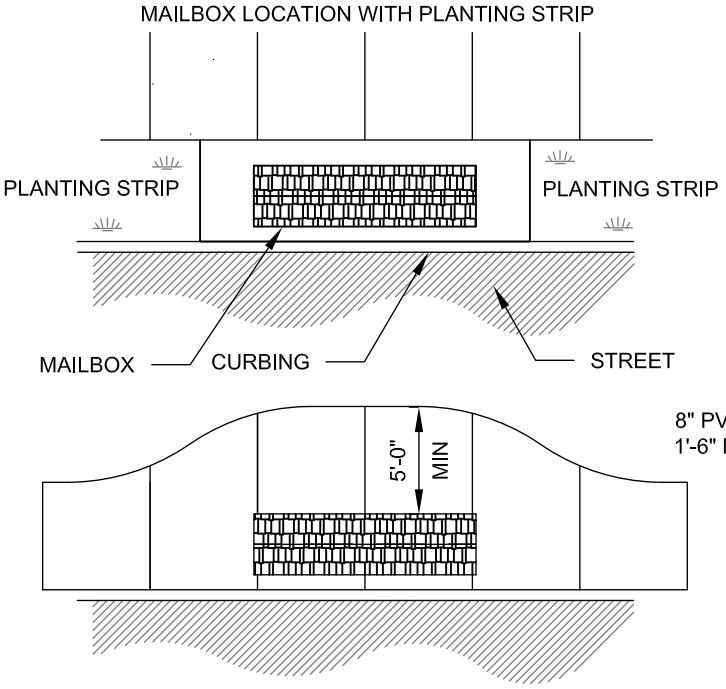

PLAN VIEWS

NTS

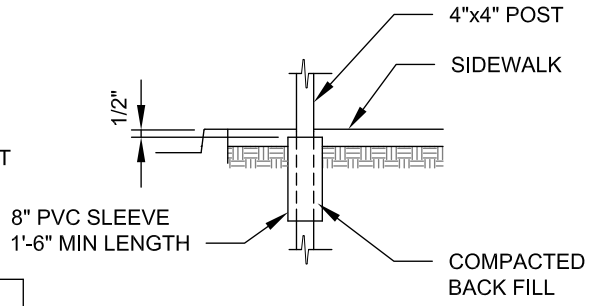

SLEEVE DETAIL

NTS

NOTES:

1. MAILBOX MUST BE POSTMASTER APPROVED WITH A UNIFORM BOX STYLE AND METHOD OF ADDRESS IDENTIFICATION.
2. LOCATION IS SUBJECT TO APPROVAL BY CITY FOR PROTECTION OF VIEWS, ACCESS, AND UTILITIES.
3. THE SKETCH DEPICTS A MINIMUM STRUCTURAL AND DIMENSIONAL STANDARD. INNOVATIVE DESIGNS MEETING THE MINIMUM DIMENSIONAL AND STRUCTURAL REQUIREMENTS ARE ACCEPTABLE.
4. DO NOT PLACE MAILBOX OVER CITY UTILITIES.
5. CLUSTER BOX UNIT MAILBOXES APROVED BY UNITED STATES POSTAL SERVICE (USPS) ARE AN ACCEPTABLE REPLACEMENT FOR THIS MAILBOX STANDARD. (SEE STD DETAIL 901A)

CITY OF REDMOND, WASHINGTON	RONALD D. GRANT STATE OF WASHINGTON 22521 REGISTERED PROFESSIONAL ENGINEER	CityofRedmond WASHINGTON	STANDARD DETAILS
APPROVED BY: RON GRANT CITY ENGINEER			**MAILBOX STANDARD**
REVISION DATE: MARCH 01, 2010			FILE NAME: SD901.DWG / DETAIL NUMBER: **901**

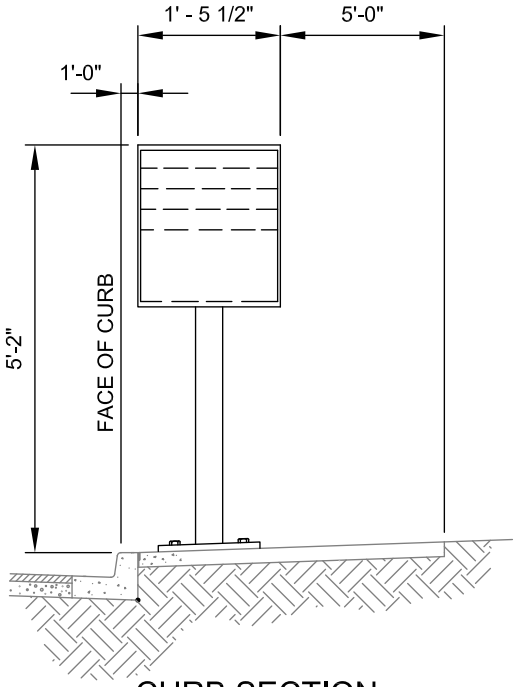

CURB SECTION

NTS

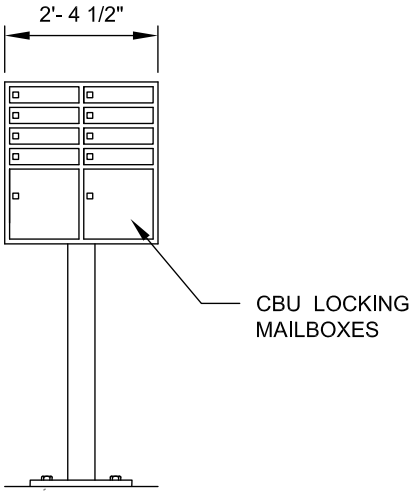

STREET ELEVATION

NTS

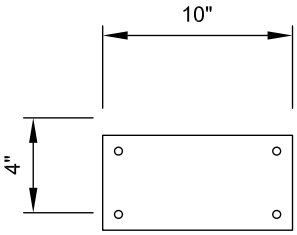

PEDESTAL BOLT
BASE PATTERN

NTS

NOTES:

1. MAILBOX MUST BE POSTMASTER APPROVED WITH A UNIFORM BOX STYLE AND METHOD OF ADDRESS IDENTIFICATION.
2. LOCATION IS SUBJECT TO APPROVAL BY CITY FOR PROTECTION OF VIEWS, ACCESS, AND UTILITIES.
3. DO NOT PLACE MAILBOX OVER CITY UTILITIES.
4. TYPE AND LOCATION OF CLUSTER BOX UNITS (CBU) INCLUDING PEDESTAL, BASE PLATE, BREAKAWAY BOLTS AND ASSOCIATED CONCRETE SLAB SHALL BE APPROVED BY THE U.S. POSTAL SERVICE.
5. INSTALLATION OF CBU WILL BE DONE BY DEVELOPER. CONTACT GLEN MILLEY AT REDMOND POST OFFICE 425-885-0252 FOR A LIST OF SUPPLIERS. FOLLOWING INSTALLATION, POST OFFICE WILL ASSIGN NUMBERS AND INSTALL THEIR LOCKS.
6. OLD MAIL BOXES MUST BE REMOVED TO MEET CITY STANDARDS.

CITY OF REDMOND, WASHINGTON	RONALD D. GRANT STATE OF WASHINGTON 22521 REGISTERED PROFESSIONAL ENGINEER	CityofRedmond WASHINGTON	STANDARD DETAILS
APPROVED BY: RON GRANT CITY ENGINEER			**CLUSTER BOX MAILBOX STANDARD**
REVISION DATE: MARCH 01, 2010			FILE NAME: SD901A.DWG / DETAIL NUMBER: **901A**

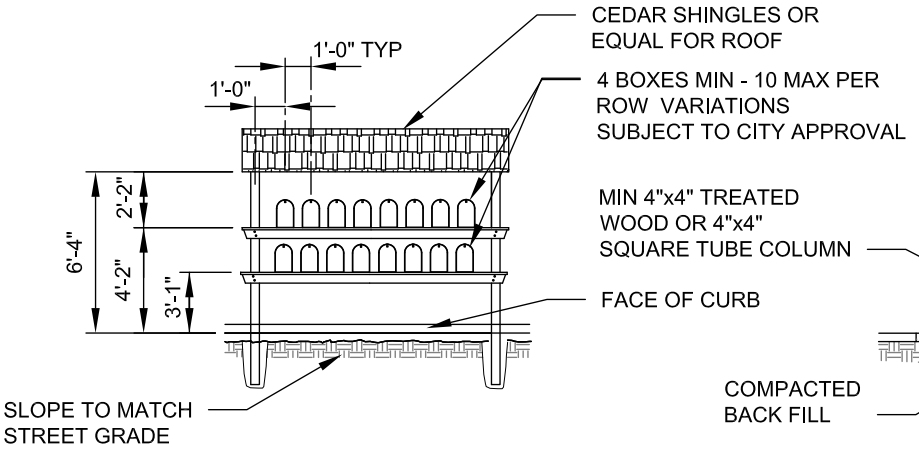

ELEVATION

NTS

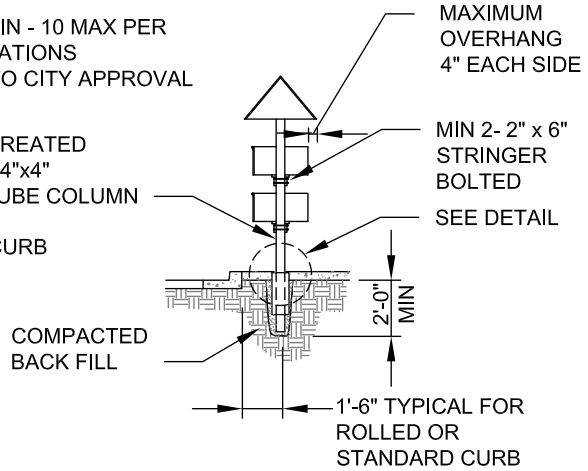

ELEVATION

NTS

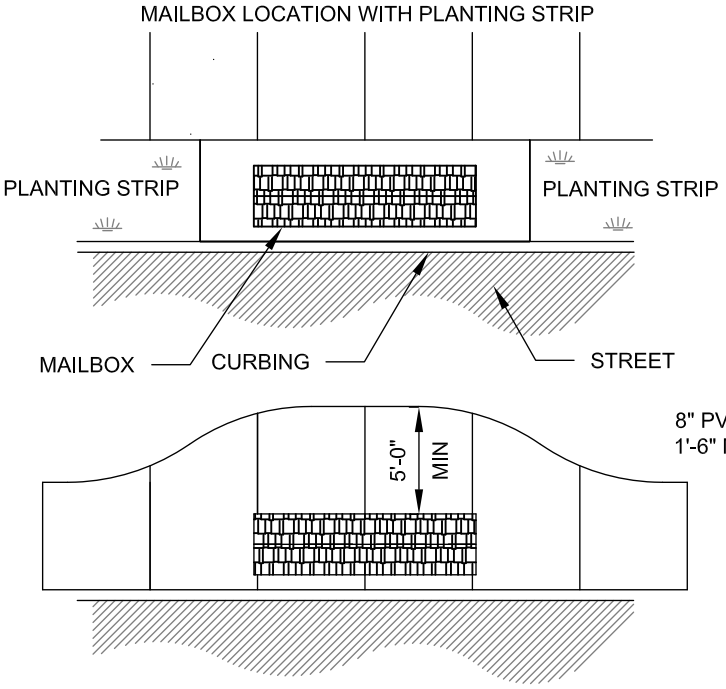

PLAN VIEWS

NTS

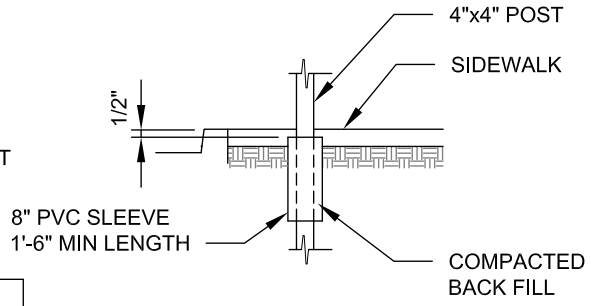

SLEEVE DETAIL

NTS

NOTES:

1. MAILBOX MUST BE POSTMASTER APPROVED WITH A UNIFORM BOX STYLE AND METHOD OF ADDRESS IDENTIFICATION.

2. LOCATION IS SUBJECT TO APPROVAL BY CITY FOR PROTECTION OF VIEWS, ACCESS, AND UTILITIES.

3. THE SKETCH DEPICTS A MINIMUM STRUCTURAL AND DIMENSIONAL STANDARD. INNOVATIVE DESIGNS MEETING THE MINIMUM DIMENSIONAL AND STRUCTURAL REQUIREMENTS ARE ACCEPTABLE.

4. DO NOT PLACE MAILBOX OVER CITY UTILITIES.

5. CLUSTER BOX UNIT MAILBOXES APROVED BY UNITED STATES POSTAL SERVICE (USPS) ARE AN ACCEPTABLE REPLACEMENT FOR THIS MAILBOX STANDARD. (SEE STD DETAIL 901A)

CITY OF REDMOND, WASHINGTON	RONALD D. GRANT STATE OF WASHINGTON 22521 REGISTERED PROFESSIONAL ENGINEER	CityofRedmond WASHINGTON	STANDARD DETAILS
APPROVED BY: RON GRANT CITY ENGINEER			**DOUBLE MAILBOX STANDARD**
REVISION DATE: MARCH 01, 2010			FILE NAME: SD902.DWG / DETAIL NUMBER: **902**

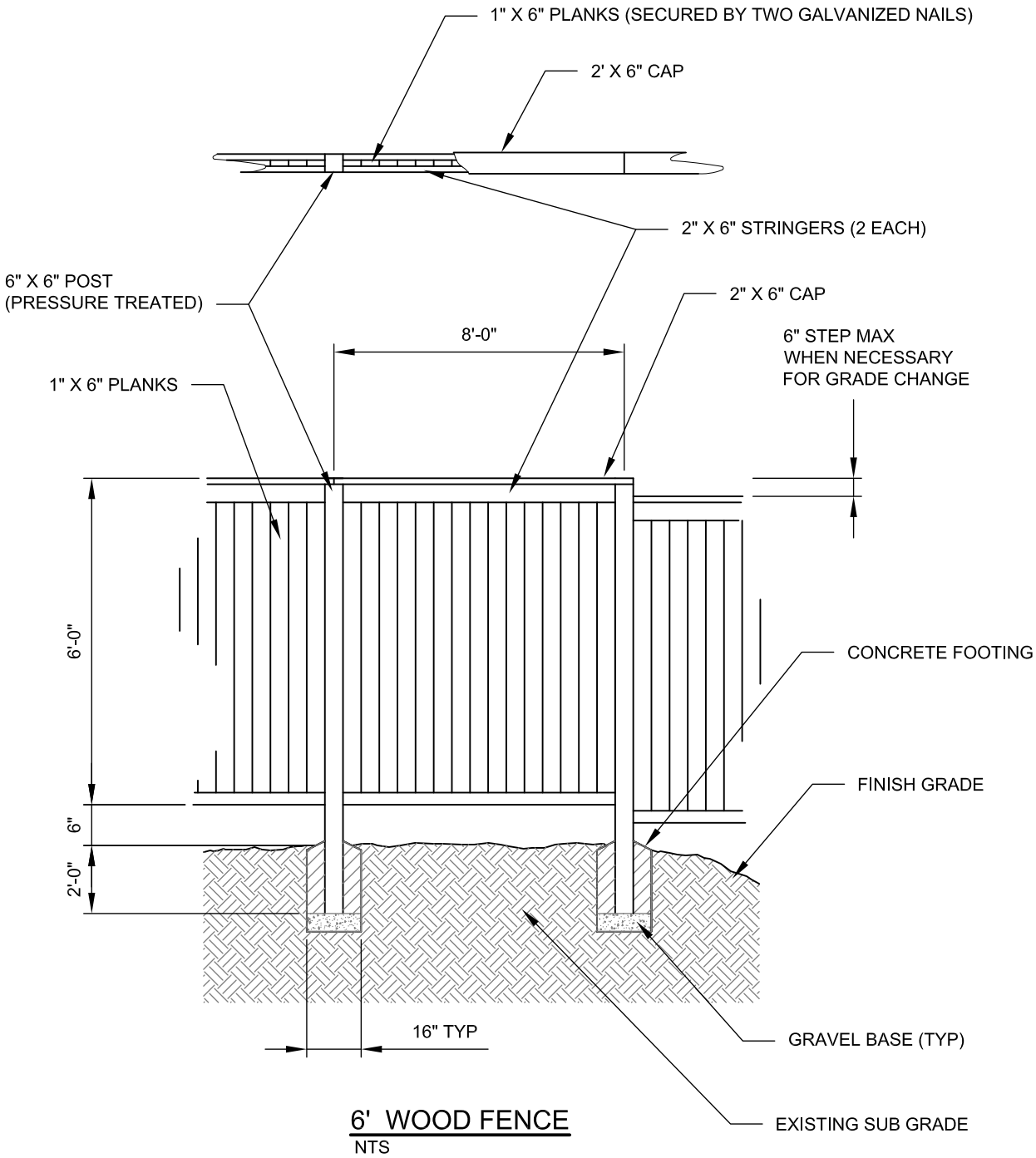

6' WOOD FENCE

NTS

NOTES:

1. 6' X 6" POSTS NEED TO BE PRESSURE TREATED FIR.
2. ALL OTHER WOOD MEMBERS TO BE CEDAR.
3. ALL NAILS USED SHALL BE GALVANIZED.

CITY OF REDMOND, WASHINGTON			STANDARD DETAILS
APPROVED BY: RON GRANT CITY ENGINEER			**6' WOOD FENCE**
REVISION DATE: MARCH 01, 2011			FILE NAME: SD904.DWG / DETAIL NUMBER: **904**

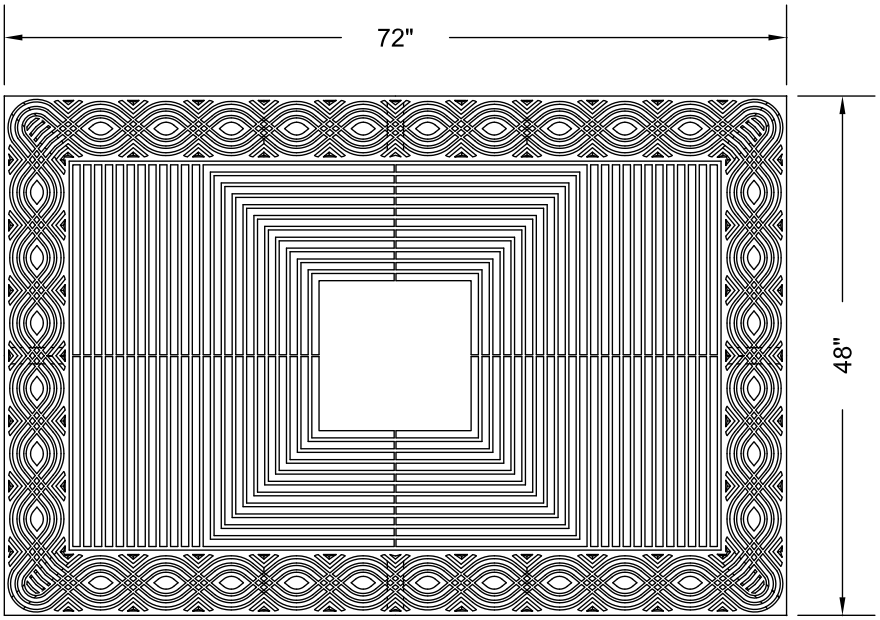

CAST IRON TREE GRATE/FRAME

NTS

NOTES:

1. CAST IN 4 PC.
2. GRATES ARE 3/4" THICK
3. BREAKOUTS
4. STANDARD OPENING
5. SOURCE – URBAN ACCESSORIES OF SEATTLE, WASHINGTON, ARCHITECREATION, INC @ 425.568.3033 OR EQUAL
6. CHINOOK 4' x 6' RCT
7. MEETS ADA STANDARDS

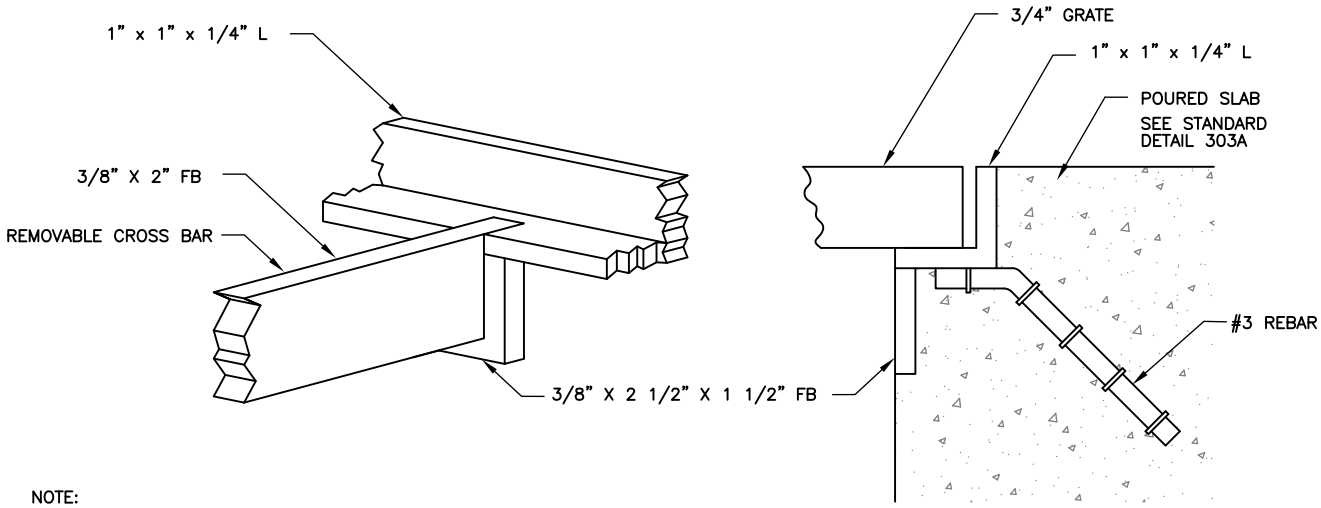

NOTE:

FRAME – 4' x 6' STD FLAT FRAME PER URBAN ACCESSORIES OR EQUAL

CITY OF REDMOND, WASHINGTON			STANDARD DETAILS
APPROVED BY: RON GRANT CITY ENGINEER			**CAST IRON TREE GRATE**
REVISION DATE: MARCH 01, 2011			FILE NAME: SD907.DWG / DETAIL NUMBER: **907**

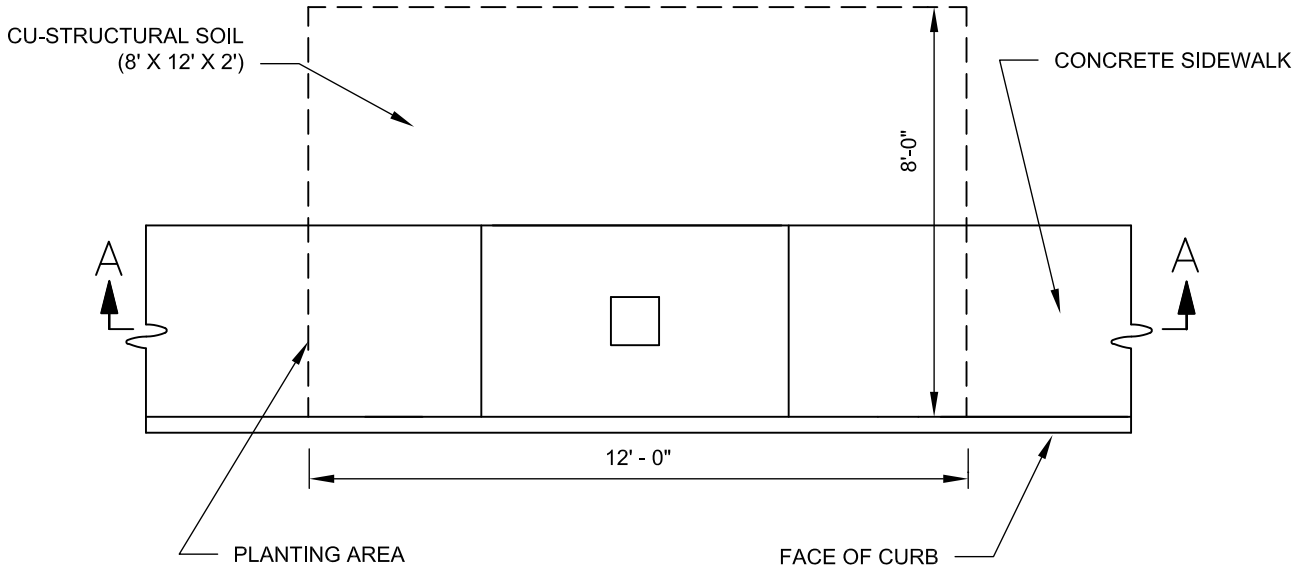

PLAN VIEW
NTS

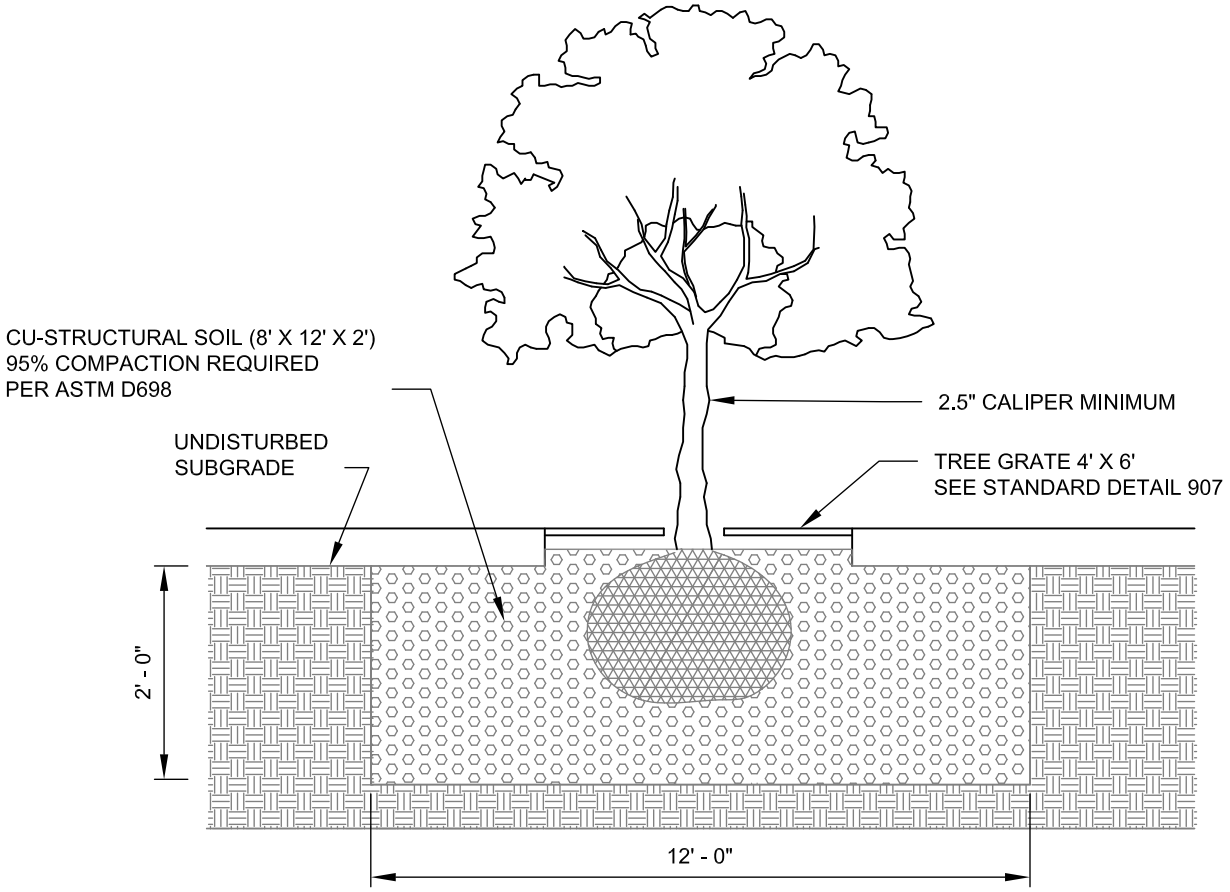

NOTE:

CU-STRUCTURAL SOIL SUPPLIED
BY: PACIFIC TOPSOILS INC,
BOTHELL, WA OR EQUAL

SECTION A-A
NTS

CITY OF REDMOND, WASHINGTON	RONALD D. GRANT STATE OF WASHINGTON 22521 REGISTERED PROFESSIONAL ENGINEER	CityofRedmond WASHINGTON	STANDARD DETAILS
APPROVED BY: RON GRANT CITY ENGINEER			**STRUCTURAL SOIL FOR STREET TREES**
REVISION DATE: MARCH 01, 2011			FILE NAME: SD907A.DWG / DETAIL NUMBER: **907A**

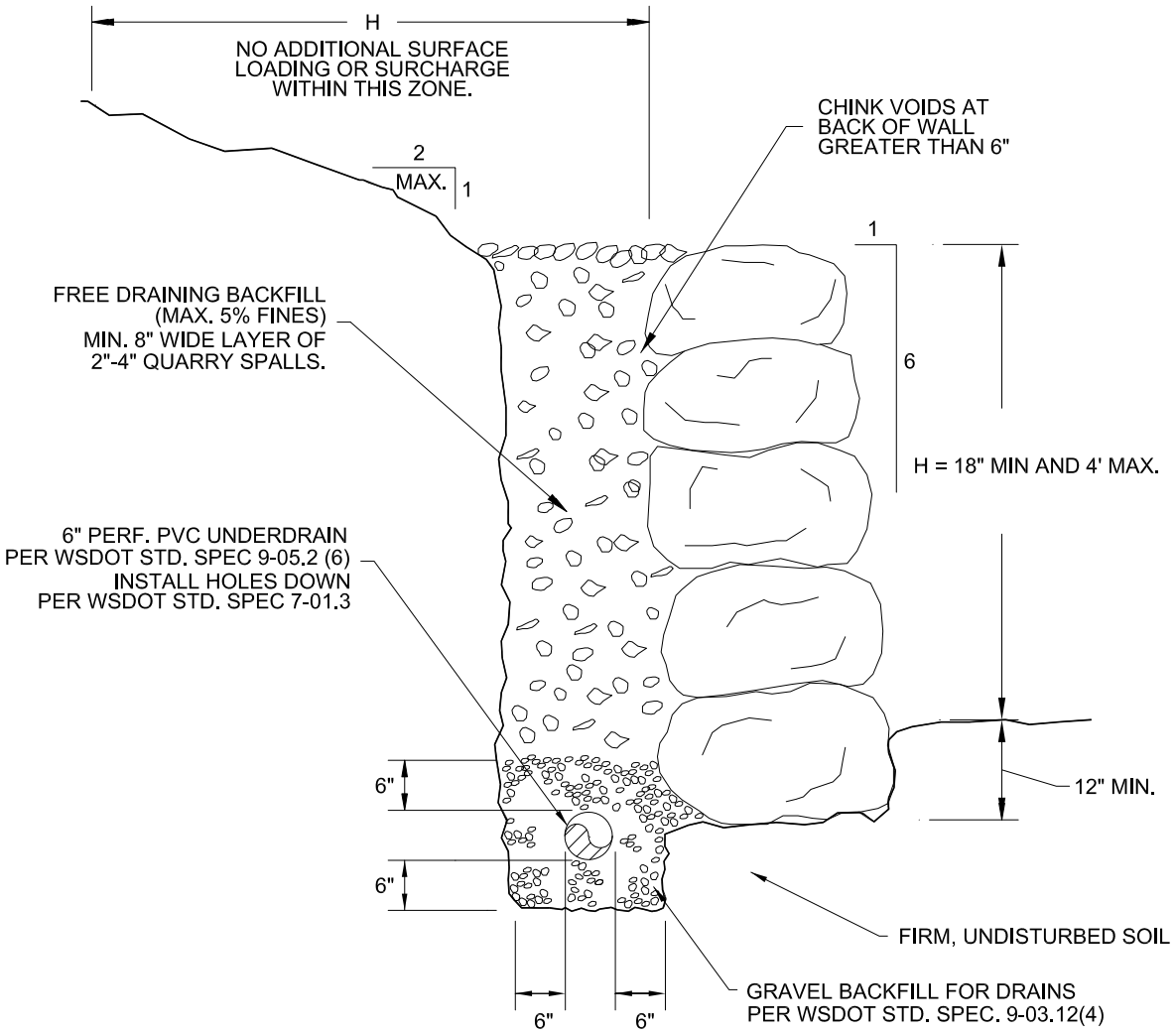

NOTES:

1. LONG DIMENSIONS OF THE ROCKS SHALL EXTEND INTO EARTH TO PROVIDE MAXIMUM STABILITY.
2. ROCK SHALL BE PLACED SO AS TO LOCK INTO TWO ROCKS IN THE LOWER TIER.
3. ROCK SHALL BE HARD, SOUND, AND DURABLE MATERIAL, FREE FROM SEAMS, CRACKS, AND OTHER DEFECTS AND SHALL MEET THE REQUIREMENTS OF WSDOT STD. SPEC 9-13.7. SIZE OF ROCK USED SHALL BE IN ACCORDANCE WITH "STANDARD ROCK WALL CONSTRUCTION GUIDELINES" OF THE ASSOCIATED ROCKERY CONTRACTORS (ARC).
4. ROCK WALLS OVER 4 FEET IN HEIGHT SHALL BE DESIGNED BY A PROFESSIONAL ENGINEER AND SUBMITTED FOR REVIEW AND APPROVAL BY THE CITY ENGINEER.
5. MATERIAL CERTIFICATIONS, TEST RESULTS, AND INSPECTION REPORTS SHALL BE SUBMITTED FOR ROCK WALLS OVER 4 FEET IN HEIGHT VERIFYING THAT THE INSTALLATION MEETS THE PLAN AND SPECIFICATION REQUIREMENTS.
6. DRAIN PIPE SHALL BE TIGHT LINED TO THE STORM SYSTEM USING CARSON BOXES FOR CLEANOUTS.
7. WHERE H (HEIGHT OF ROCK WALL) IS 30 INCHES OR MORE BELOW THE FINISHED ELEVATION OF THE SIDEWALK OR OTHER FACILITY, A SAFETY RAILING SHALL BE CONSTRUCTED PER STANDARD DETAIL NO. 321.
8. ROCKERIES MUST BE ACCESSIBLE BY MAINTENANCE VEHICLES.
9. DRAINAGE IS REQUIRED BEHIND ROCK WALL, IF ADJACENT TO CITY RIGHT-OF-WAY, AND HEIGHT (H) GREATER THAN 18 INCHES.

CITY OF REDMOND, WASHINGTON			STANDARD DETAILS
APPROVED BY: RON GRANT CITY ENGINEER			**ROCK WALL**
REVISION DATE: MARCH 01, 2011			FILE NAME: SD909.DWG / DETAIL NUMBER: **909**

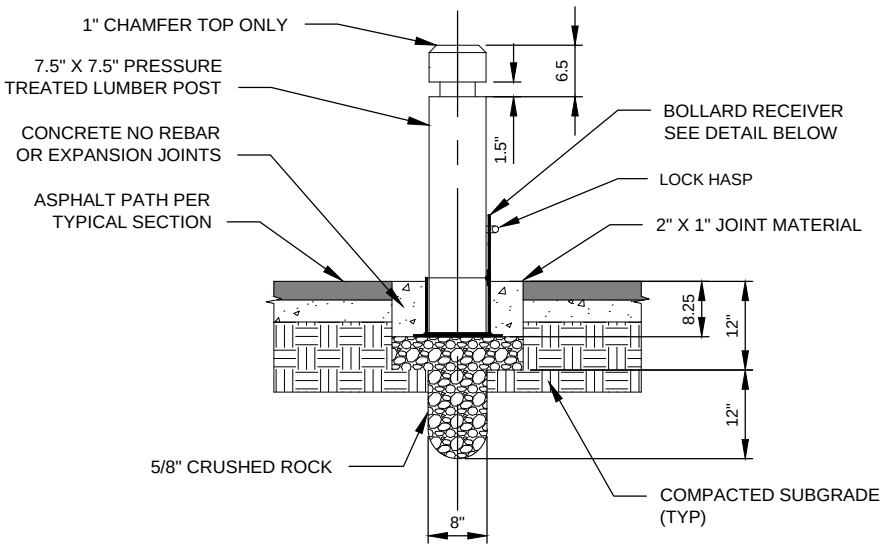

REMOVABLE BOLLARD ELEVATION

NTS

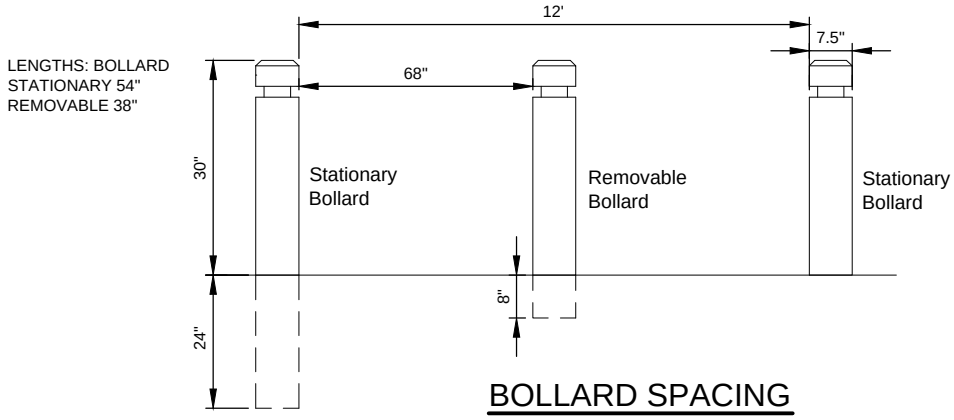

BOLLARD SPACING

NTS

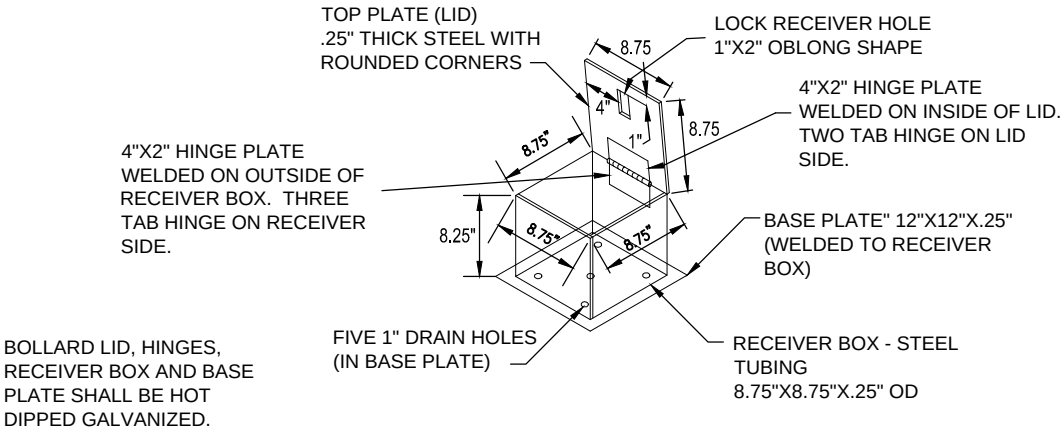

REMOVABLE BOLLARD RECEIVER

NTS

CITY OF REDMOND, WASHINGTON			STANDARD DETAILS
APPROVED BY: RON GRANT CITY ENGINEER			PARKS BOLLARD
REVISION DATE: MARCH 01, 2012			FILE NAME: SD911.DWG / DETAIL NUMBER: 911

1. CONTROLLER CABINET - VIT INC. - STRONG BOX
   METERED - SB-24SS/120V
   NON-METERED - SB-24SS
2. RISER PEDESTAL - VIT INC. - STRONG BOX PED-24SS (12") REQ. ON NON-METERED CABINET
3. FOUNDATION - VIT INC. - STRONGBOX
   METERED CABINET - QUICKPAD - QP-M
   NON METERED CABINET - QUICKPAD QP-24
4. BACK PANEL - STAINLESS STEEL FOR WALL AND CABINET MOUNT (TYP.)
5. CONTROLLER: RAINBIRD ESP-XX, SAT OR SITE-W CONTROLLER WITH REMOTE RECEIVER CARD (#01060UP).
6. IF USING ESP-SAT - USE CCU 6 (JR)
7. RJ-11 PHONE JACK AND HARDLINE PHONE SERVICE (REQ.).
8. TERMINAL BOX W/ TERMINAL STRIPS.
9. GFI OUTLET
10. GROUND LUG.
11. 1" CONDUIT FOR GROUND WIRE FROM GROUNDING GRID (TYP.).
12. 2" CONDUIT FOR STATION ZONE CONTROL WIRES
13. FINISHED GRADE

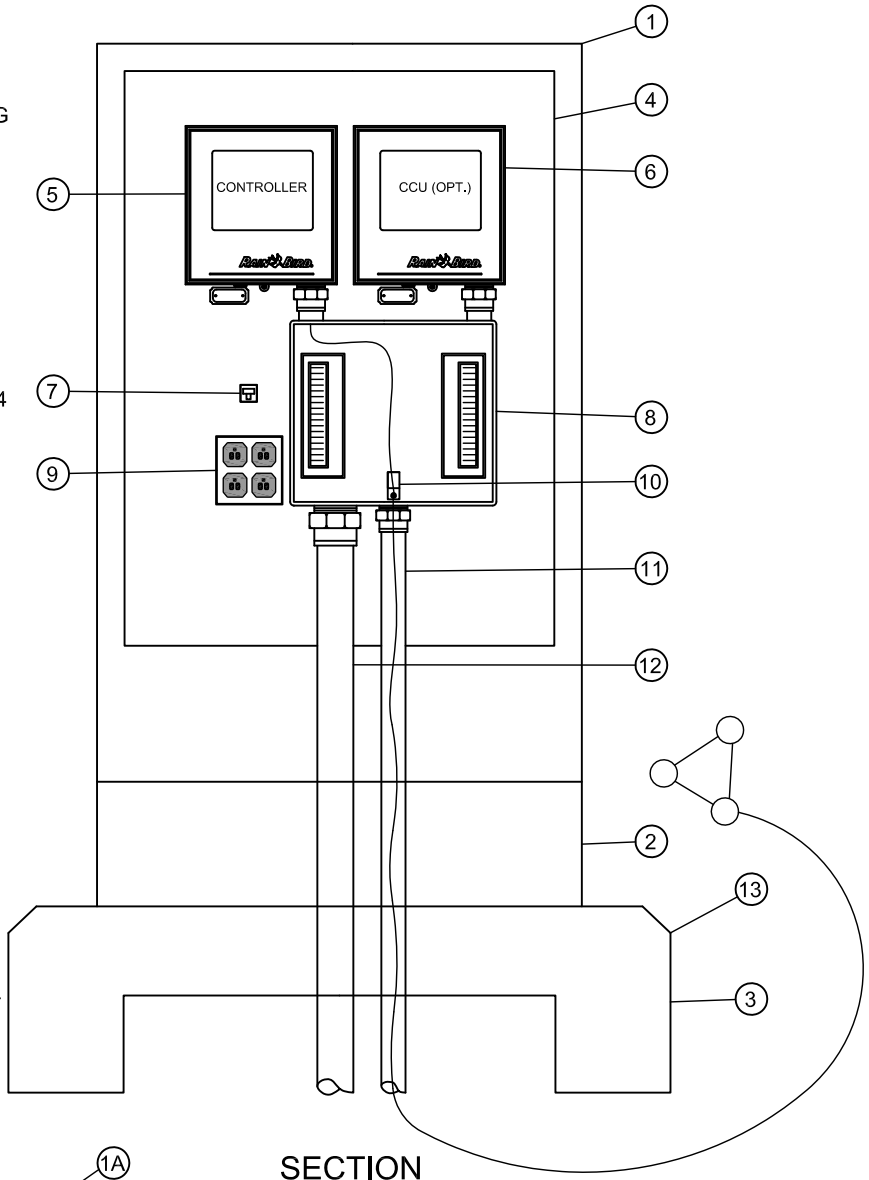

SECTION
NTS

GROUND GRID DETAIL

NTS

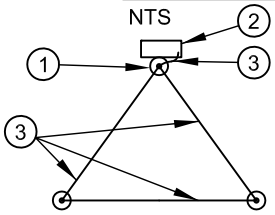

GROUND ROD LAYOUT

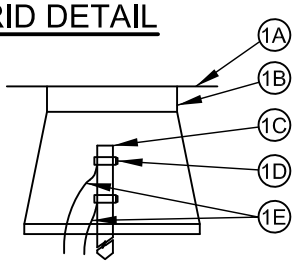

GROUND ROD ASSEMBLY

1. GROUND ROD ASSEMBLY
   - 1A FINAL GRADE
   - 1B 8" VALVE BOX
   - 1C 8' COPPER CLAD GROUND ROD
   - 1D GROUND ROD CLAMPS
   - 1E MIN 10-1 BARE COPPER
2.
3. PROTECTED DEVICE
   BARE COPPER GROUND WIRE

NOTES:
1. MINIMUM 8' SPACING BETWEEN RODS
2. USE 10g (MINIMUM) BARE COPPER WIRE
3. WIRE FROM EQUIPMENT TO FIRST ROD SHOULD BE AS SHORT AND STRAIGHT AS POSSIBLE.
4. USE SEPARATE CLAMP FOR EACH WIRE

CITY OF REDMOND, WASHINGTON			STANDARD DETAILS
APPROVED BY: RON GRANT CITY ENGINEER			**IRRIGATION CONTROL PANEL AND CABINET**
REVISION DATE: JUNE 01, 2013			FILE NAME: SD920.DWG / DETAIL NUMBER: **920**

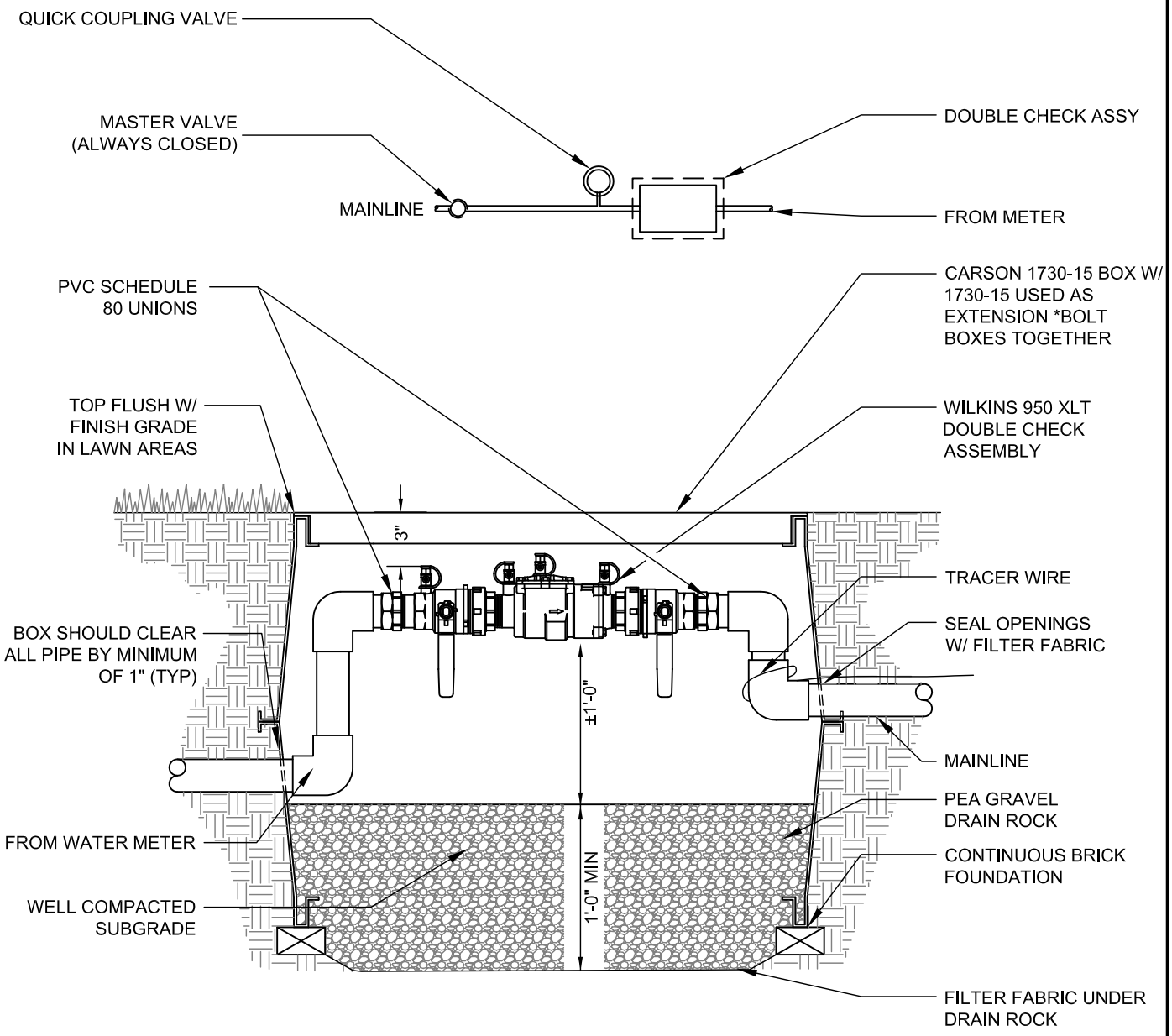

SECTION

NTS

CITY OF REDMOND, WASHINGTON			STANDARD DETAILS
APPROVED BY: RON GRANT CITY ENGINEER			**DOUBLE CHECK VALVE**
REVISION DATE: JUNE 01, 2013			FILE NAME: SD921.DWG / DETAIL NUMBER: **921**

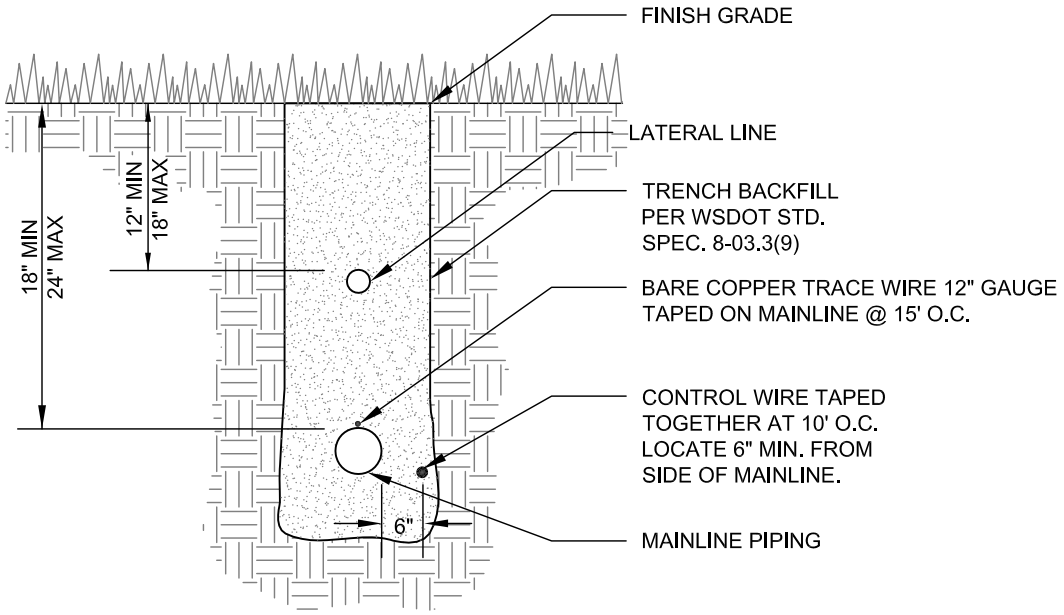

SECTION

NTS

NOTES:

1. SEE STD. SPEC. 9-15.05 FOR REDMOND PARKS IRRIGATION STANDARDS.

CITY OF REDMOND, WASHINGTON			STANDARD DETAILS
APPROVED BY: RON GRANT CITY ENGINEER			**IRIGATION TRENCH**
REVISION DATE: JUNE 01, 2013			FILE NAME: SD922.DWG / DETAIL NUMBER: **922**

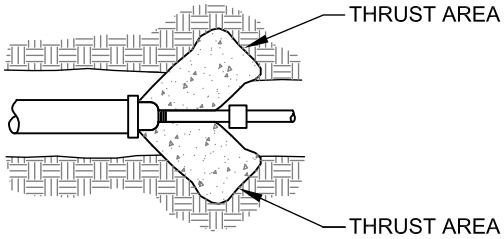

CAPS / PLUGS

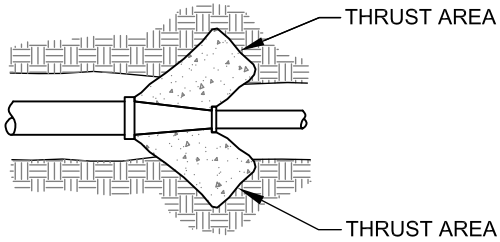

REDUCERS

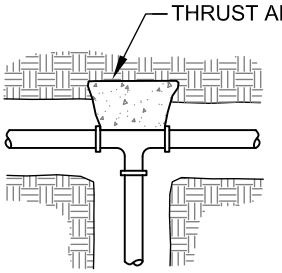

TEES

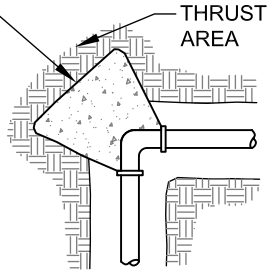

ELLS

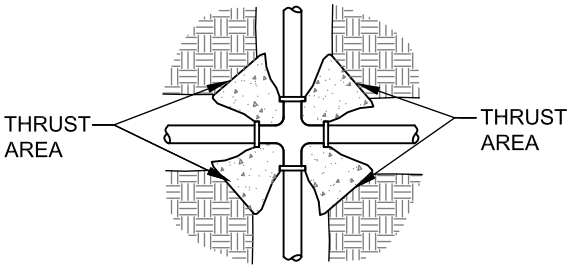

CROSSES

FITTING SIZES	BEARING AREA OF BLOCK IN SQUARE FEET			
	TEES & ENDS	90° BEND	45° BEND	22.5° BEND
4"	1-1/2	2	1-1/2	1-1/2

ALL BLOCKING SHALL BE POURED AGAINST FIRM UNDISTURBED SOIL.
SOIL BEARING PRESSURE SHALL EXCEED 4,500 LB PER SQUARE FOOT
FOR ABOVE AREAS.

SECTION

NTS

CITY OF REDMOND, WASHINGTON			STANDARD DETAILS
APPROVED BY: RON GRANT CITY ENGINEER			**THRUST BLOCK**
REVISION DATE: MARCH 01, 2010			FILE NAME: SD923.DWG / DETAIL NUMBER: **923**

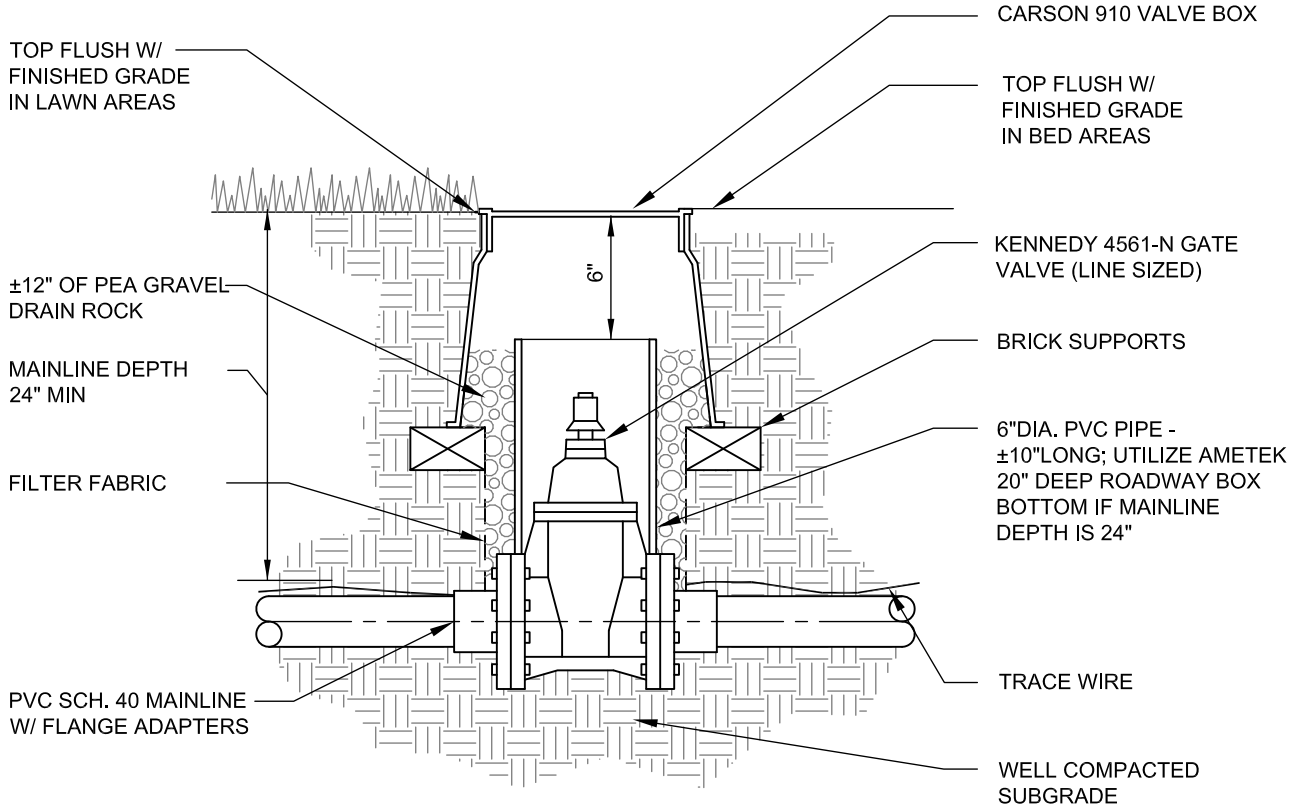

SECTION

NTS

CITY OF REDMOND, WASHINGTON			STANDARD DETAILS
APPROVED BY: RON GRANT CITY ENGINEER			**SYSTEM GATE VALVE**
REVISION DATE: MARCH 01, 2010			FILE NAME: SD925.DWG / DETAIL NUMBER: **925**

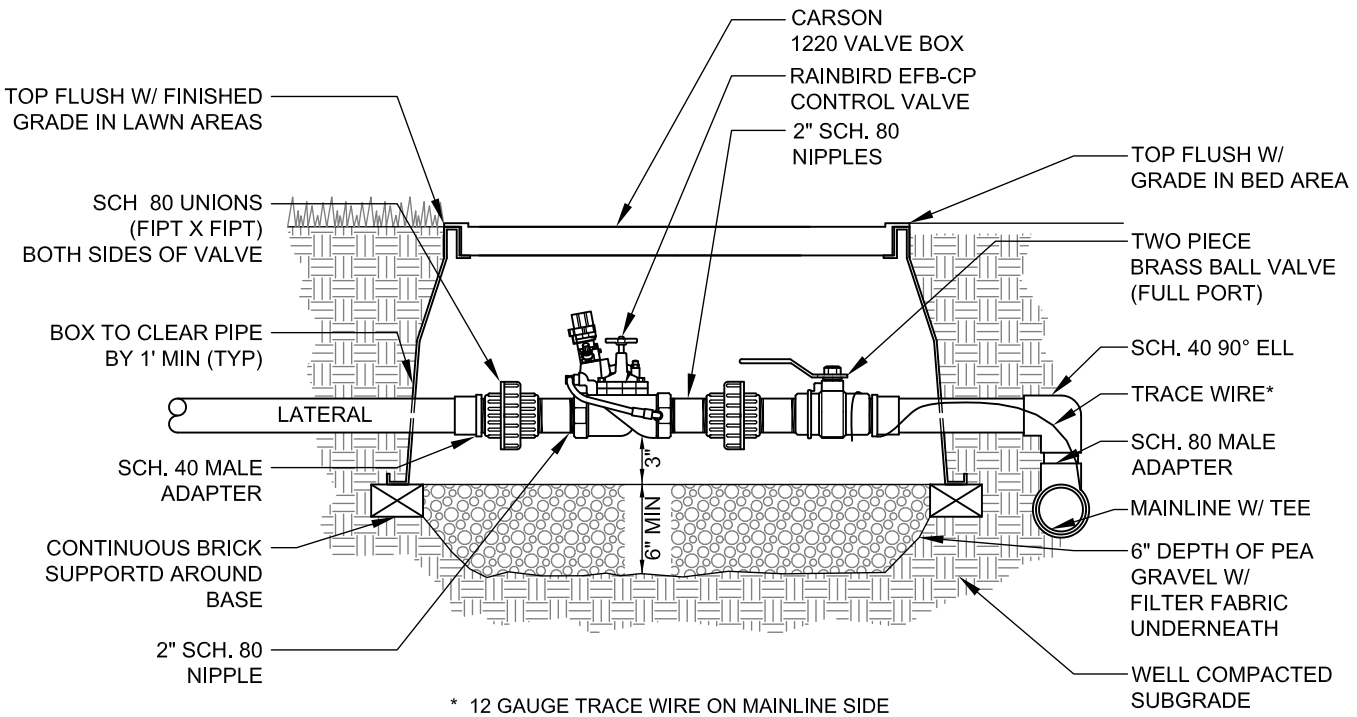

* 12 GAUGE TRACE WIRE ON MAINLINE SIDE DEAD-ENDING AT EACH VALVE.

SECTION

NTS

NOTES:

1. ALL WIRE INSTALLATIONS WILL BE IN COMPLIANCE WITH APPLICABLE CODES.
2. BUNDLE AND TAPE WIRE EVERY 10 FEET. SET WIRE 6 INCHES FROM MAINLINE.
3. PROVIDE EXPANSION COILS AT EACH WIRE CONNECTION IN VALVE BOX.
4. COMPACT SOIL AROUND VALVE BOX TO SAME DENSITY AS UNDISTURBED ADJACENT SOIL.
5. PLACE FILTER FABRIC OVER OPENINGS (OUTSIDE) TO PREVENT SOIL FROM ENTERING BOX.
6. VALVE BOX SHALL NOT REST ON PIPES. PROVIDE 1 INCH CLEARANCE AROUND ALL PIPES.

CITY OF REDMOND, WASHINGTON	RONALD D. GRANT STATE OF WASHINGTON 22521 REGISTERED PROFESSIONAL ENGINEER	CityofRedmond WASHINGTON	STANDARD DETAILS
APPROVED BY: RON GRANT CITY ENGINEER			**CONTROL VALVE**
REVISION DATE: MARCH 01, 2010			FILE NAME: SD926.DWG / DETAIL NUMBER: **926**

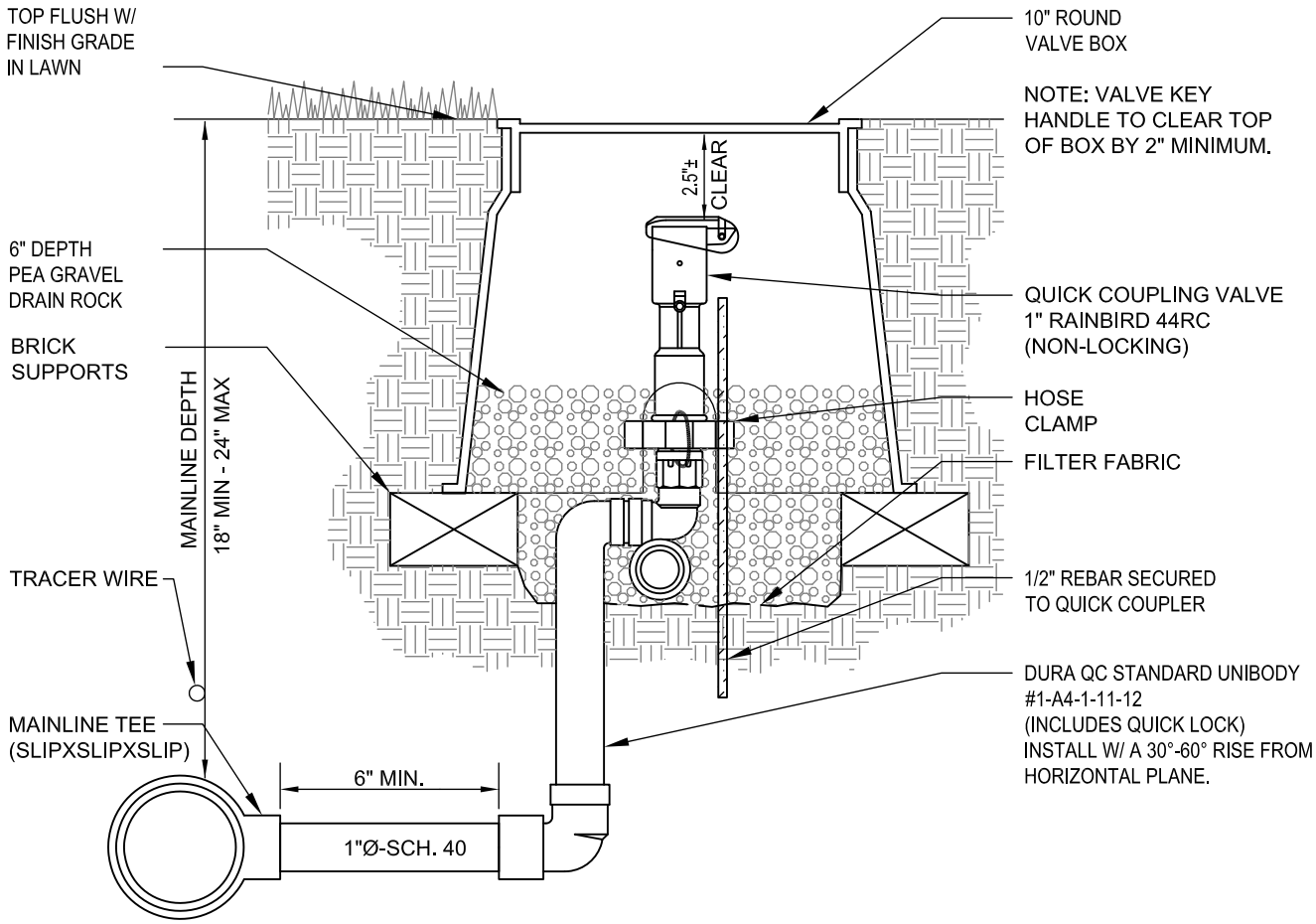

SECTION

NTS

CITY OF REDMOND, WASHINGTON			STANDARD DETAILS
APPROVED BY: RON GRANT CITY ENGINEER			**QUICK COUPLER**
REVISION DATE: MARCH 01, 2010			FILE NAME: SD927.DWG / DETAIL NUMBER: **927**

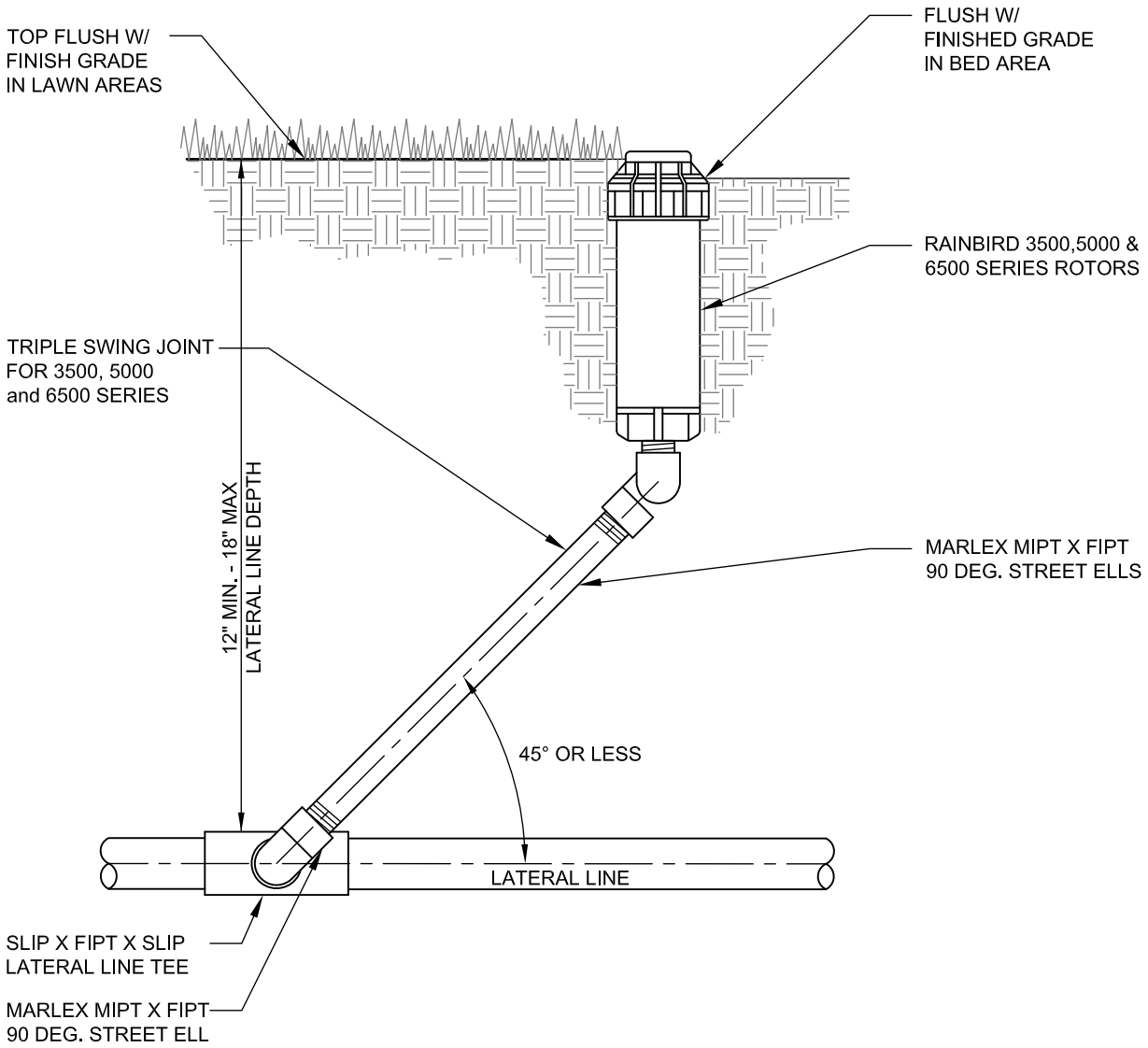

SECTION

NTS

CITY OF REDMOND, WASHINGTON			STANDARD DETAILS
APPROVED BY: RON GRANT CITY ENGINEER			**RAINBIRD 3500/5000/6500 SERIES HEAD AND SWING JOINT**
REVISION DATE: MARCH 01, 2010			FILE NAME: SD928.DWG / DETAIL NUMBER: **928**

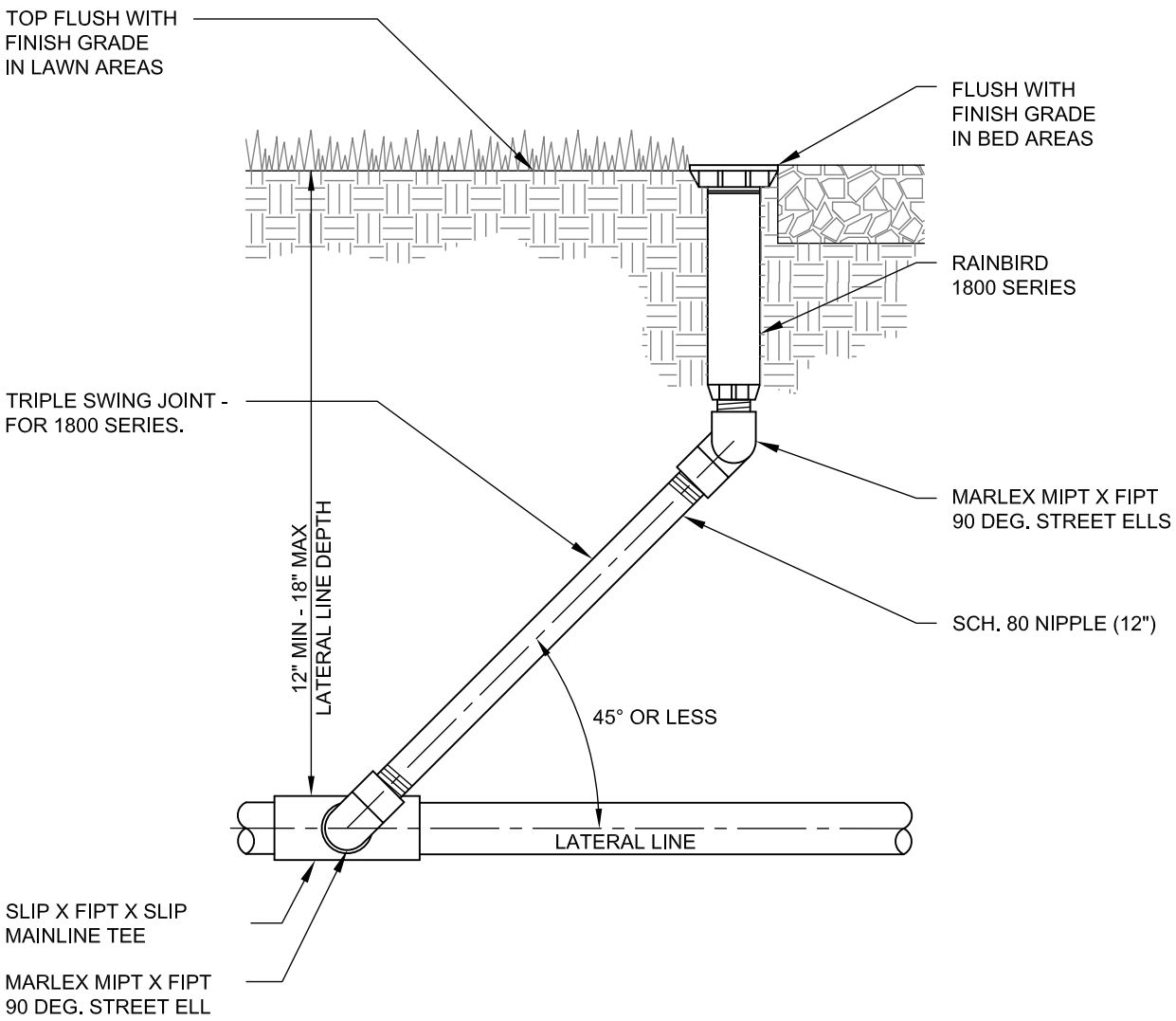

SECTION

NTS

CITY OF REDMOND, WASHINGTON			STANDARD DETAILS
APPROVED BY: RON GRANT CITY ENGINEER			**RAINBIRD 1800 SERIES HEAD AND SWING JOINT**
REVISION DATE: MARCH 01, 2010			FILE NAME: SD929.DWG / DETAIL NUMBER: **929**

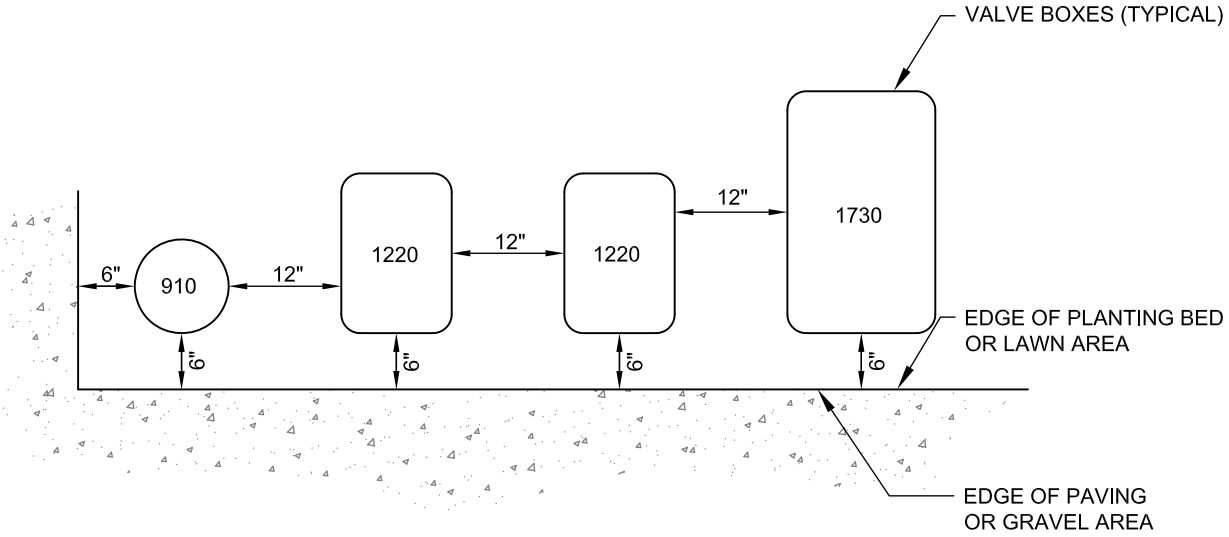

SECTION

NTS

NOTES:

TO FACILITATE REMOVAL AND SERVICING.

1. CENTER VALVE BOX OVER VALVE
2. SET BOXES PARALLEL TO EACH OTHER AND PERPENDICULAR TO EDGE.
3. AVOID OVER COMPACTING SOIL AROUND VALVE BOXES TO PREVENT COLLAPSE AND DEFORMATION OF VALVE BOXES.

CITY OF REDMOND, WASHINGTON			STANDARD DETAILS
APPROVED BY: RON GRANT CITY ENGINEER			**VALVE BOX INSTALLATION**
REVISION DATE: MARCH 01, 2010			FILE NAME: SD930.DWG / DETAIL NUMBER: **930**