DRAWN BY: MARK SUJKA

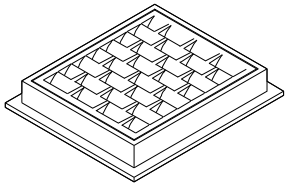

FRAME AND VANED GRATE

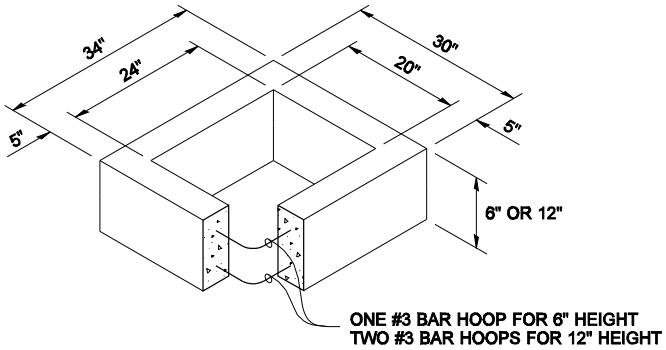

RECTANGULAR ADJUSTMENT SECTION

PIPE ALLOWANCES	
PIPE MATERIAL	MAXIMUM INSIDE DIAMETER
REINFORCED OR PLAIN CONCRETE	12"
ALL METAL PIPE	15"
CPSSP * (STD. SPEC. 9-05.20)	12"
SOLID WALL PVC (STD. SPEC. 9-05.12(1))	15"
PROFILE WALL PVC (STD. SPEC. 9-05.12(2))	15"

* CORRUGATED POLYETHYLENE STORM SEWER PIPE

NOTES

1. As acceptable alternatives to the rebar shown in the **PRECAST BASE SECTION**, fibers (placed according to the Standard Specifications), or wire mesh having a minimum area of 0.12 square inches per foot shall be used with the minimum required rebar shown in the **ALTERNATIVE PRECAST BASE SECTION**. Wire mesh shall not be placed in the knockouts.
2. The knockout diameter shall not be greater than 18". Knockouts shall have a wall thickness of 2" minimum to 2.5" maximum. Provide a 1.5" minimum gap between the knockout wall and the outside of the pipe. After the pipe is installed, fill the gap with joint mortar in accordance with Standard Specification 9-04.3.
3. The maximum depth from the finished grade to the lowest pipe invert shall be 5'.
4. The frame and grate may be installed with the flange up or down. The frame may be cast into the adjustment section.
5. The Precast Base Section may have a rounded floor, and the walls may be sloped at a rate of 1:24 or steeper.
6. The opening shall be measured at the top of the precast base section.
7. All pickup holes shall be grouted full after the inlet has been placed.

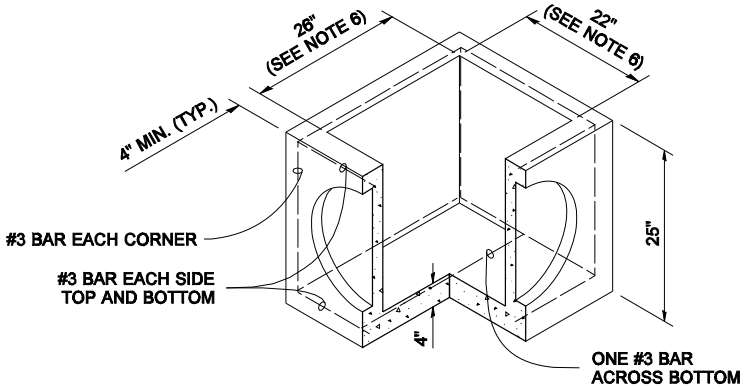

PRECAST BASE SECTION

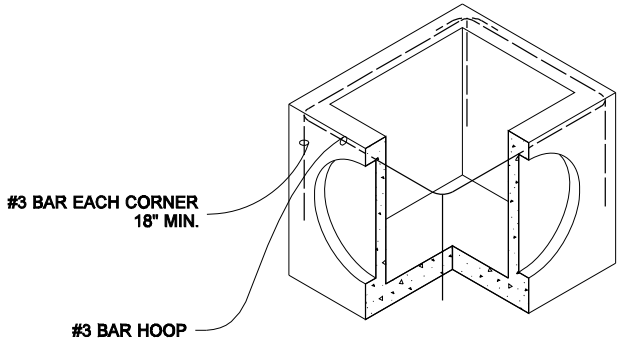

SEE NOTE 1

ALTERNATIVE PRECAST BASE SECTION

NOTE: THIS PLAN IS NOT A LEGAL ENGINEERING DOCUMENT BUT AN ELECTRONIC DUPLICATE. THE ORIGINAL, SIGNED BY THE ENGINEER AND APPROVED FOR PUBLICATION, IS KEPT ON FILE AT THE WASHINGTON STATE DEPARTMENT OF TRANSPORTATION. A COPY MAY BE OBTAINED UPON REQUEST.

CONCRETE INLET

STANDARD PLAN B-25.60-00

SHEET 1 OF 1 SHEET

APPROVED FOR PUBLICATION

Harold J. Peterfeso — STATE DESIGN ENGINEER

06-01-06 — DATE

Washington State Department of Transportation

DRAWN BY: MARK SUJKA

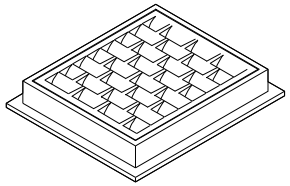

FRAME AND VANED GRATE

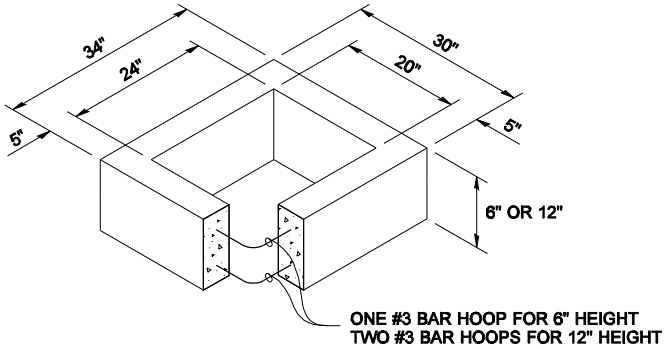

RECTANGULAR ADJUSTMENT SECTION

PIPE ALLOWANCES	
PIPE MATERIAL	MAXIMUM INSIDE DIAMETER
REINFORCED OR PLAIN CONCRETE	12"
ALL METAL PIPE	15"
CPSSP * (STD. SPEC. 9-05.20)	12"
SOLID WALL PVC (STD. SPEC. 9-05.12(1))	15"
PROFILE WALL PVC (STD. SPEC. 9-05.12(2))	15"

* CORRUGATED POLYETHYLENE STORM SEWER PIPE

NOTES

1. As acceptable alternatives to the rebar shown in the **PRECAST BASE SECTION**, fibers (placed according to the Standard Specifications), or wire mesh having a minimum area of 0.12 square inches per foot shall be used with the minimum required rebar shown in the **ALTERNATIVE PRECAST BASE SECTION**. Wire mesh shall not be placed in the knockouts.
2. The knockout diameter shall not be greater than 20". Knockouts shall have a wall thickness of 2" minimum to 2.5" maximum. Provide a 1.5" minimum gap between the knockout wall and the outside of the pipe. After the pipe is installed, fill the gap with joint mortar in accordance with Standard Specification 9-04.3.
3. The maximum depth from the finished grade to the lowest pipe invert shall be 5'.
4. The frame and grate may be installed with the flange up or down. The frame may be cast into the adjustment section.
5. The Precast Base Section may have a rounded floor, and the walls may be sloped at a rate of 1:24 or steeper.
6. The opening shall be measured at the top of the precast base section.
7. All pickup holes shall be grouted full after the basin has been placed.

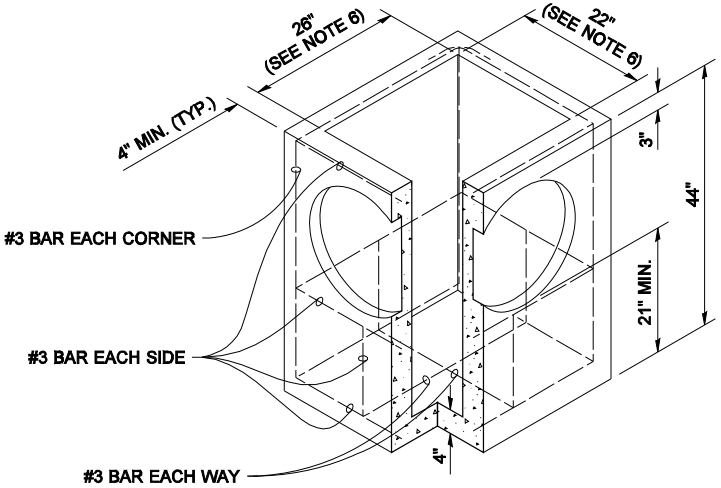

PRECAST BASE SECTION

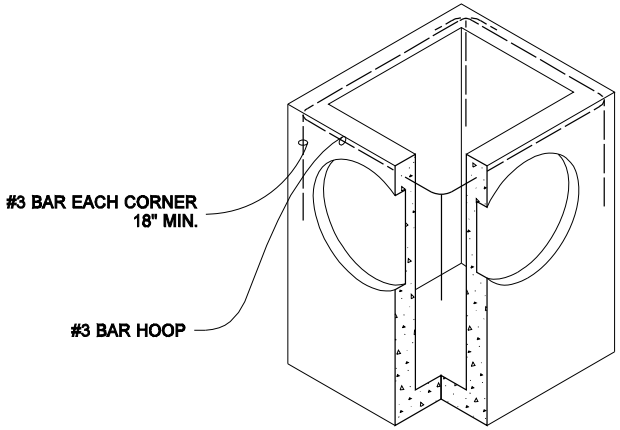

SEE NOTE 1

ALTERNATIVE PRECAST BASE SECTION

NOTE: THIS PLAN IS NOT A LEGAL ENGINEERING DOCUMENT BUT AN ELECTRONIC DUPLICATE. THE ORIGINAL, SIGNED BY THE ENGINEER AND APPROVED FOR PUBLICATION, IS KEPT ON FILE AT THE WASHINGTON STATE DEPARTMENT OF TRANSPORTATION. A COPY MAY BE OBTAINED UPON REQUEST.

CATCH BASIN TYPE 1

STANDARD PLAN B-5.20-00

SHEET 1 OF 1 SHEET

APPROVED FOR PUBLICATION

Harold J. Peterfeso — STATE DESIGN ENGINEER

06-01-06 — DATE

Washington State Department of Transportation

DRAWN BY: MARK SUJKA

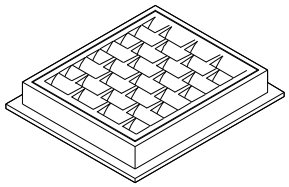

FRAME AND VANED GRATE

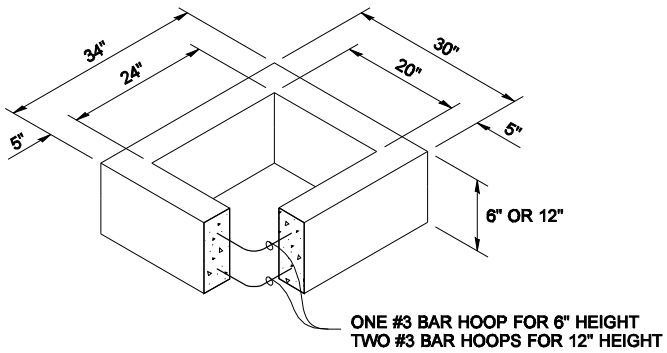

RECTANGULAR ADJUSTMENT SECTION

PIPE ALLOWANCES	
PIPE MATERIAL	MAXIMUM INSIDE DIAMETER
REINFORCED OR PLAIN CONCRETE	18"
ALL METAL PIPE	21"
CPSSP * (STD. SPEC. 9-05.20)	18"
SOLID WALL PVC (STD. SPEC. 9-05.12(1))	21"
PROFILE WALL PVC (STD. SPEC. 9-05.12(2))	21"

* CORRUGATED POLYETHYLENE STORM SEWER PIPE

NOTES

1. As acceptable alternatives to the rebar shown in the **PRECAST BASE SECTION**, fibers (placed according to the Standard Specifications), or wire mesh having a minimum area of 0.12 square inches per foot shall be used with the minimum required rebar shown in the **ALTERNATIVE PRECAST BASE SECTION**. Wire mesh shall not be placed in the knockouts.
2. The knockout diameter shall not be greater than 26". Knockouts shall have a wall thickness of 2" minimum to 2.5" maximum. Provide a 1.5" minimum gap between the knockout wall and the outside of the pipe. After the pipe is installed, fill the gap with joint mortar in accordance with Standard Specification 9-04.3.
3. The maximum depth from the finished grade to the lowest pipe invert shall be 5'.
4. The frame and grate may be installed with the flange up or down. The frame may be cast into the adjustment section.
5. The Precast Base Section may have a rounded floor, and the walls may be sloped at a rate of 1:24 or steeper.
6. The opening shall be measured at the top of the precast base section.
7. All pickup holes shall be grouted full after the basin has been placed.

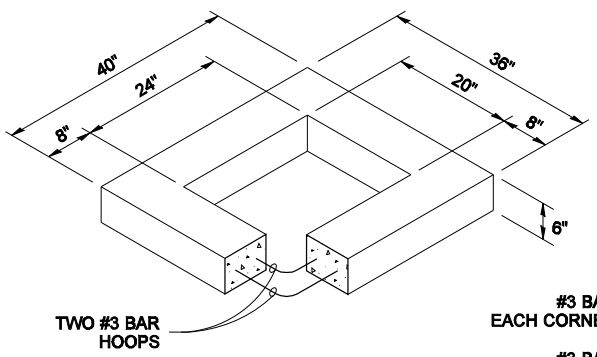

REDUCING SECTION

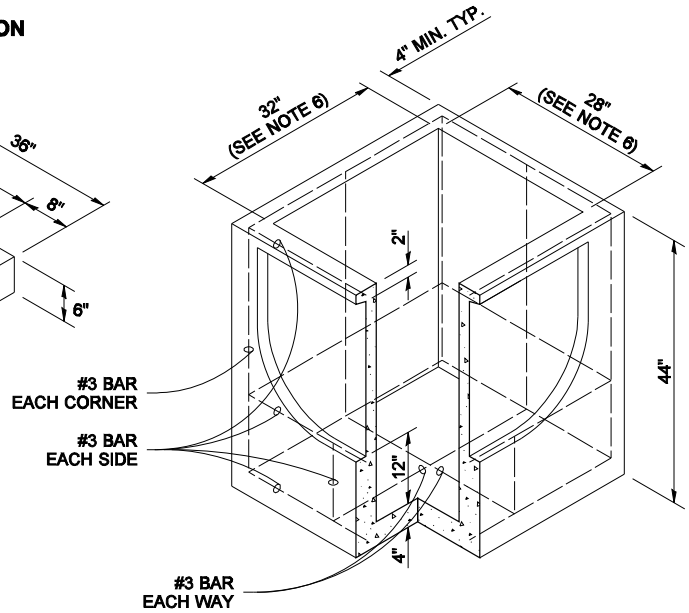

PRECAST BASE SECTION

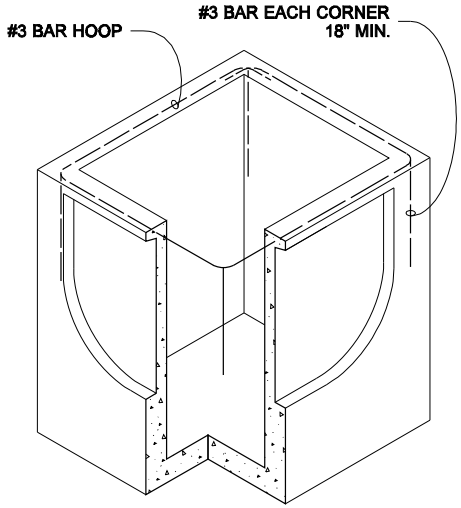

SEE NOTE 1

ALTERNATIVE PRECAST BASE SECTION

EXPIRES JULY 1, 2007

NOTE: THIS PLAN IS NOT A LEGAL ENGINEERING DOCUMENT BUT AN ELECTRONIC DUPLICATE. THE ORIGINAL, SIGNED BY THE ENGINEER AND APPROVED FOR PUBLICATION, IS KEPT ON FILE AT THE WASHINGTON STATE DEPARTMENT OF TRANSPORTATION. A COPY MAY BE OBTAINED UPON REQUEST.

CATCH BASIN TYPE 1L

STANDARD PLAN B-5.40-00

SHEET 1 OF 1 SHEET

APPROVED FOR PUBLICATION

Harold J. Peterfeso — STATE DESIGN ENGINEER — *06-01-06* — DATE

Washington State Department of Transportation

DRAWN BY: ADAM COCHRAN

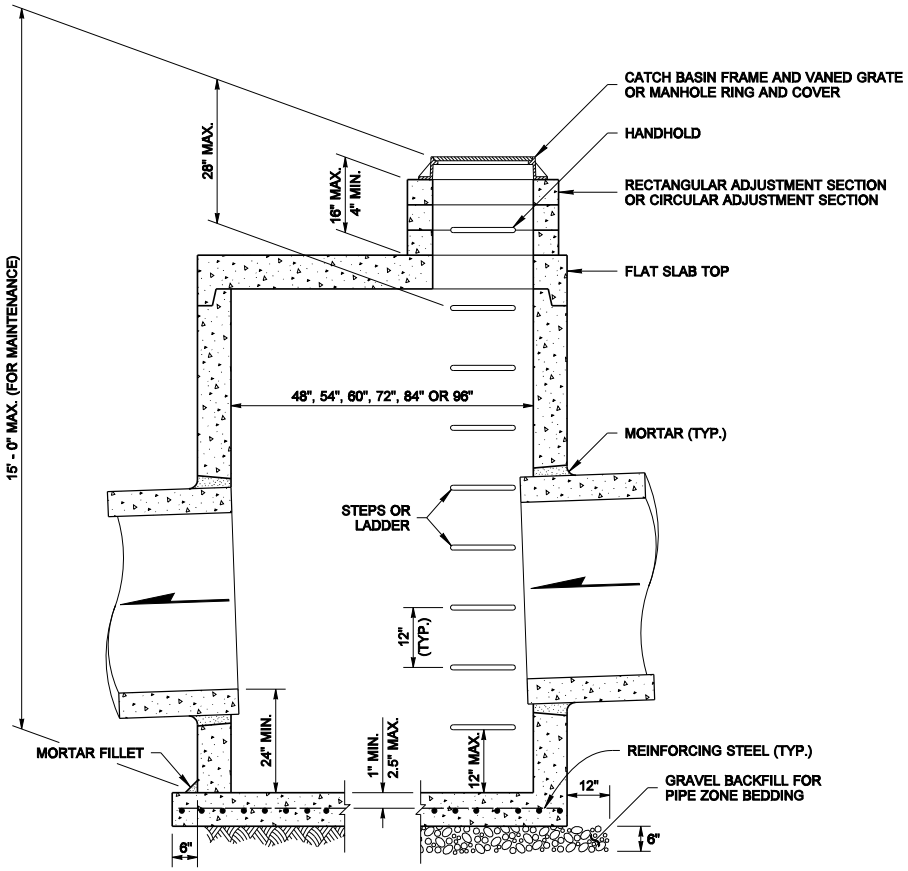

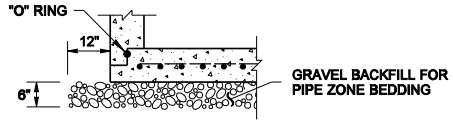

SEPARATE BASE
PRECAST

NOTES

1. No steps are required when height is 4' or less.
2. The bottom of the precast catch basin may be sloped to facilitate cleaning.
3. The rectangular frame and grate may be installed with the flange up or down. The frame may be cast into the adjustment section.
4. Knockouts shall have a wall thickness of 2" minimum to 2.5" maximum. Provide a 1.5" minimum gap between the knockout wall and the outside of the pipe. After the pipe is installed, fill the gap with joint mortar in accordance with Standard Specification 9-04.3.

CATCH BASIN DIMENSIONS

CATCH BASIN DIAMETER	WALL THICKNESS	BASE THICKNESS	MAXIMUM KNOCKOUT SIZE	MINIMUM DISTANCE BETWEEN KNOCKOUTS	BASE REINFORCING STEEL in^2 /ft. IN EACH DIRECTION	
					SEPARATE BASE	INTEGRAL BASE
48"	4"	6"	36"	8"	0.23	0.15
54"	4.5"	8"	42"	8"	0.19	0.19
60"	5"	8"	48"	8"	0.25	0.25
72"	6"	8"	60"	12"	0.35	0.24
84"	8"	12"	72"	12"	0.39	0.29
96"	8"	12"	84"	12"	0.39	0.29

PIPE ALLOWANCES

CATCH BASIN DIAMETER	PIPE MATERIAL WITH MAXIMUM INSIDE DIAMETER				
	CONCRETE	ALL METAL	CPSSP ①	SOLID WALL PVC ②	PROFILE WALL PVC ③
48"	24"	30"	24"	27"	30"
54"	30"	36"	30"	27"	36"
60"	36"	42"	36"	36"	42"
72"	42"	54"	42"	36"	48"
84"	54"	60"	54"	36"	48"
96"	60"	72"	60"	36"	48"

① Corrugated Polyethylene Storm Sewer Pipe (Std. Spec. 9-05.20)
② (Std. Spec. 9-05.12(1))
③ (Std. Spec. 9-05.12(2))

NOTE: THIS PLAN IS NOT A LEGAL ENGINEERING DOCUMENT BUT AN ELECTRONIC DUPLICATE. THE ORIGINAL, SIGNED BY THE ENGINEER AND APPROVED FOR PUBLICATION, IS KEPT ON FILE AT THE WASHINGTON STATE DEPARTMENT OF TRANSPORTATION. A COPY MAY BE OBTAINED UPON REQUEST.

CATCH BASIN TYPE 2

STANDARD PLAN B-10.20-00

SHEET 1 OF 1 SHEET

APPROVED FOR PUBLICATION

Harold J. Peterfeso — STATE DESIGN ENGINEER
06-01-06 — DATE

Washington State Department of Transportation

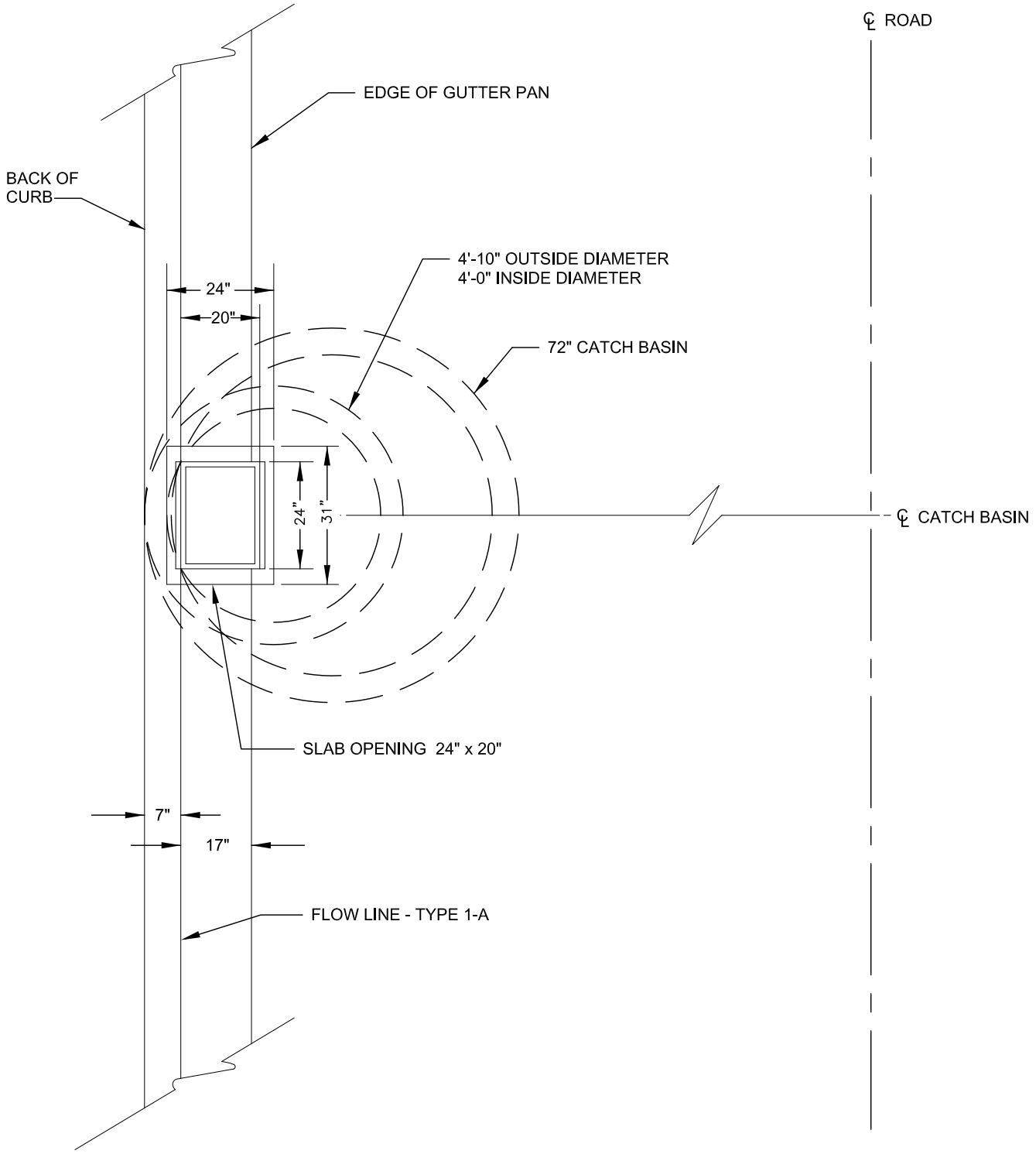

PLAN

NTS

CITY OF REDMOND, WASHINGTON			STANDARD DETAILS
APPROVED BY: RON GRANT CITY ENGINEER			**TYPICAL ORIENTATION OF TYPE 2 CB IN CITY STREET SECTION**
REVISION DATE: MARCH 01, 2011			FILE NAME: SD609A.DWG / DETAIL NUMBER: **609A**

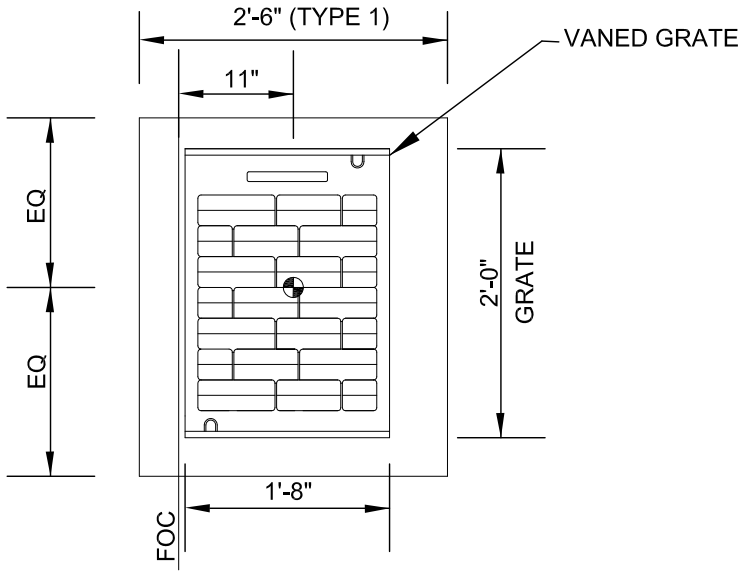

TYPE 1/1L

NTS

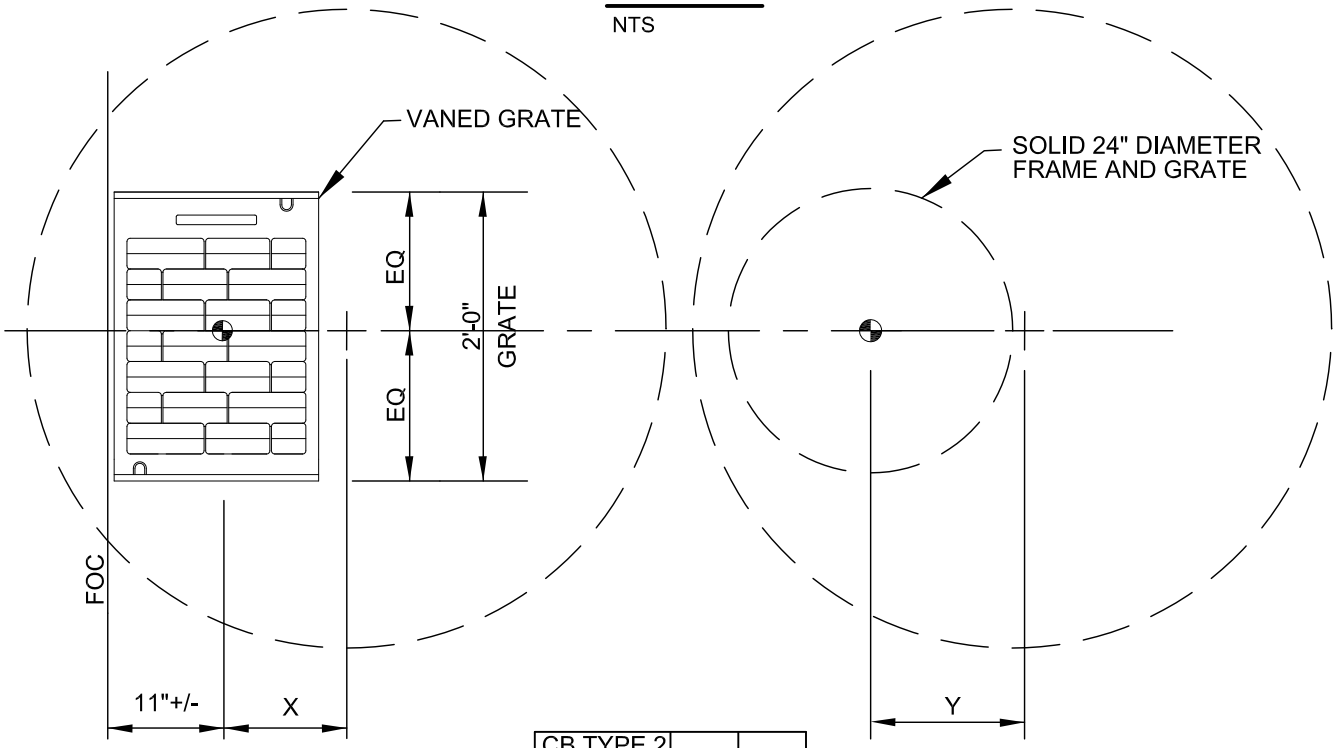

CB TYPE 2		X	Y
I.D.	O.D.		
48"	58"	11"	12"
54"	65"	14"	15"
60"	72"	17"	18"
72"	86"	24"	24"

KEY

CENTER OF GRATE

CENTER OF STRUCTURE

NOTES:

1. CENTER OF GRATE = CENTER OF STRUCTURE FOR TYPE 1 AND TYPE 1L STRUCTURES ONLY.
2. SPECIFIED STATION AND OFFSET REFERENCE CENTER OF STRUCTURE FOR ALL DRAINAGE FACILITIES UNLESS OTHERWISE NOTED ON PLANS.
3. ALL GRATES SHALL BE VANED UNLESS OTHERWISE SHOWN.

TYPE 2/3

NTS

CITY OF REDMOND, WASHINGTON			STANDARD DETAILS
APPROVED BY: RON GRANT CITY ENGINEER			**TYPICAL CATCH BASIN PLACEMENT**
REVISION DATE: MARCH 01, 2011			FILE NAME: SD609B.DWG / DETAIL NUMBER: **609B**

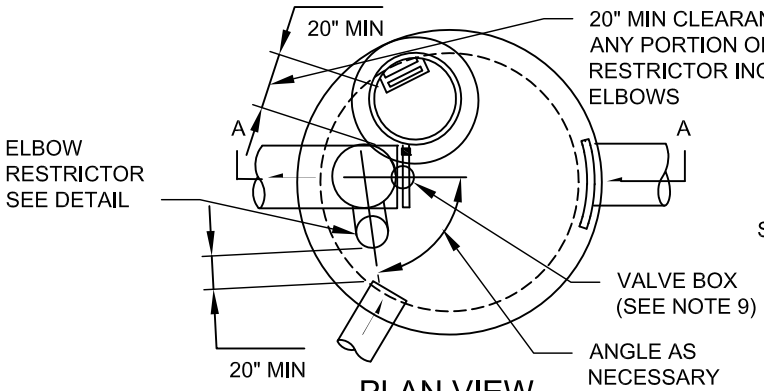

PLAN VIEW

NTS

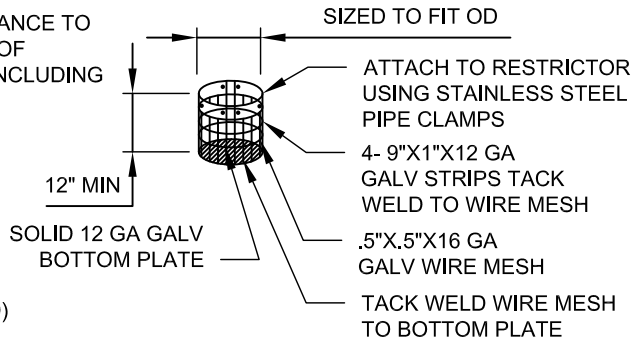

ORIFICE SCREEN

NTS

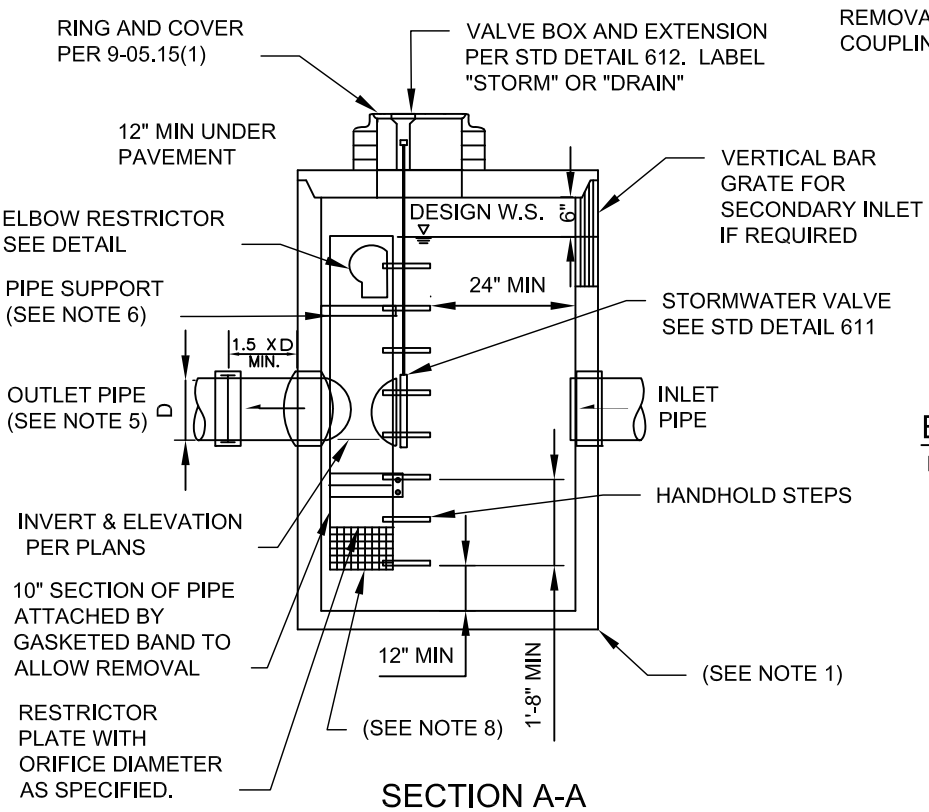

SECTION A-A

NTS

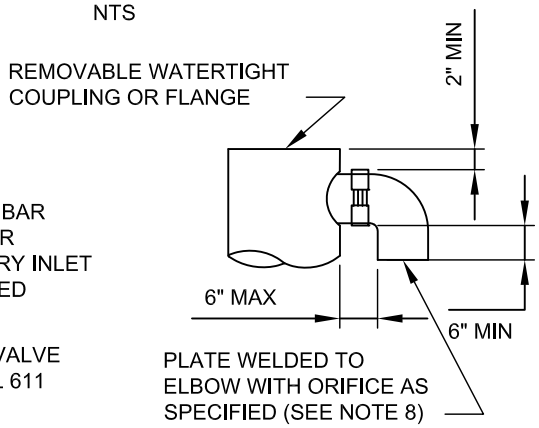

ELBOW RESTRICTOR DETAIL

NTS

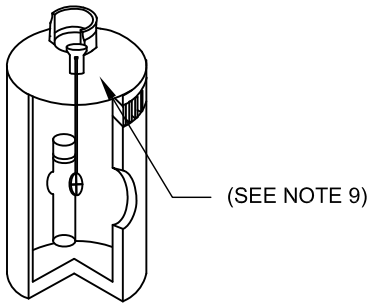

ISOMETRIC

NTS

NOTES:

1. MINIMUM 54" TYPE 2 CB. LARGER MANHOLES REQUIRED FOR OUTLET PIPES GREATER THAN 12" OR MULTIPLE ORIFICE RESTRICTORS.
2. OUTLET CAPACITY: 50-YEAR DEVELOPED PEAK FLOW.
3. RESTRICTOR FABRICATED FROM ALUMINUM OR PVC PIPE.
4. FRAME AND LADDER OR STEPS OFFSET SO:
   A. CLEANOUT GATE IS VISIBLE FROM TOP;
   B. CLIMB-DOWN SPACE IS CLEAR OF RISER AND CLEANOUT GATE;
   C. FRAME IS CLEAR OF CURB.
5. IF METAL OUTLET PIPE CONNECTS TO CEMENT CONCRETE PIPE, OUTLET PIPE TO HAVE SMOOTH O.D. EQUAL TO CONCRETE PIPE ID. LESS ¼ IN.
6. PROVIDE AT LEAST TWO 3 X 0.090 GAUGE STAINLESS STEEL SUPPORT BRACKETS ANCHORED TO CONCRETE WALL WITH ⅝ IN STAINLESS STEEL EXPANSION BOLTS OR EMBEDDED SUPPORTS 2 IN INTO M/H WALL. MAX 3' OC.
7. LOCATE ELBOW RESTRICTOR(S) AS NECESSARY TO PROVIDE MIN CLEARANCE AS SHOWN.
8. ORIFICE SCREEN IS REQUIRED FOR ORIFICES LESS THAN 3" DIAMETER. RESTRICTOR PLATE FROM 12 GAUGE ALUMINUM OR PVC PIPE.
9. CONSTRUCT VALVE BOX ADJACENT TO MANHOLE ACCESS.

CITY OF REDMOND, WASHINGTON			STANDARD DETAILS	
APPROVED BY: RON GRANT CITY ENGINEER	RONALD D. GRANT STATE OF WASHINGTON 22521 REGISTERED PROFESSIONAL ENGINEER	CityofRedmond WASHINGTON	**FLOW CONTROL STRUCTURE**	
REVISION DATE: MARCH 01, 2012			FILE NAME: SD610.DWG	DETAIL NUMBER: **610**

DRAWN BY: MARK SUJKA

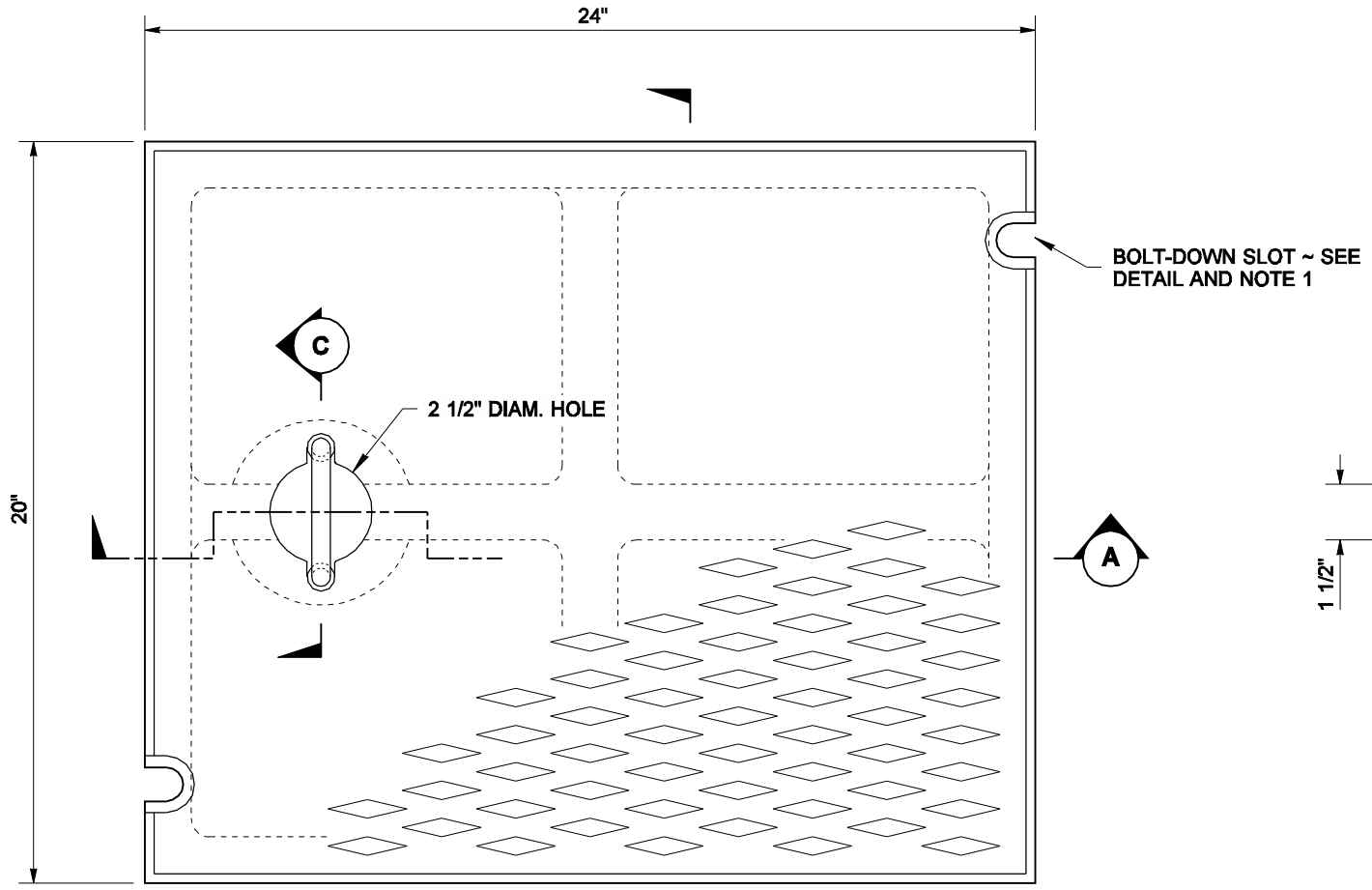

TOP

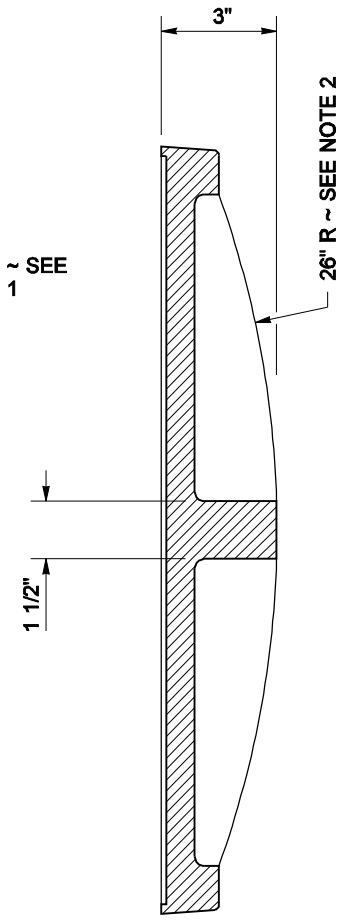

SECTION B

NOTES

1. When bolt-down covers are specified in the Contract, provide two slots in the cover that are vertically aligned with the holes in the frame. Location of bolt-down slots varies among different manufacturers.
2. Alternative reinforcing designs are acceptable in lieu of the rib design.
3. Refer to Standard Specification 9-05.15(2) for additional requirements.
4. For frame details, see Standard Plan B-30.10.

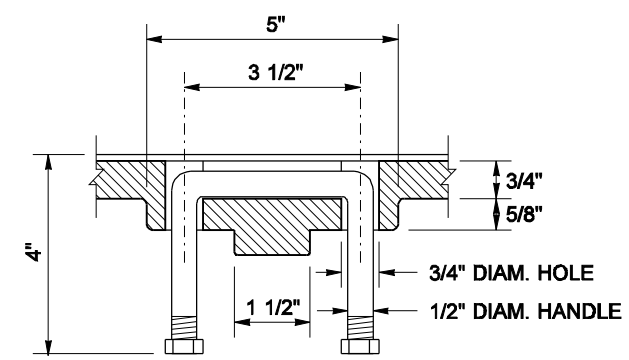

SECTION C

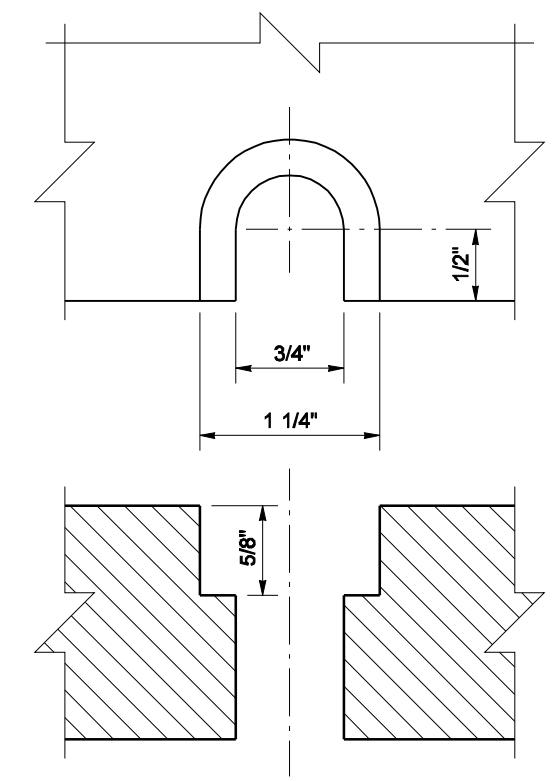

BOLT-DOWN SLOT DETAIL
SEE NOTE 1

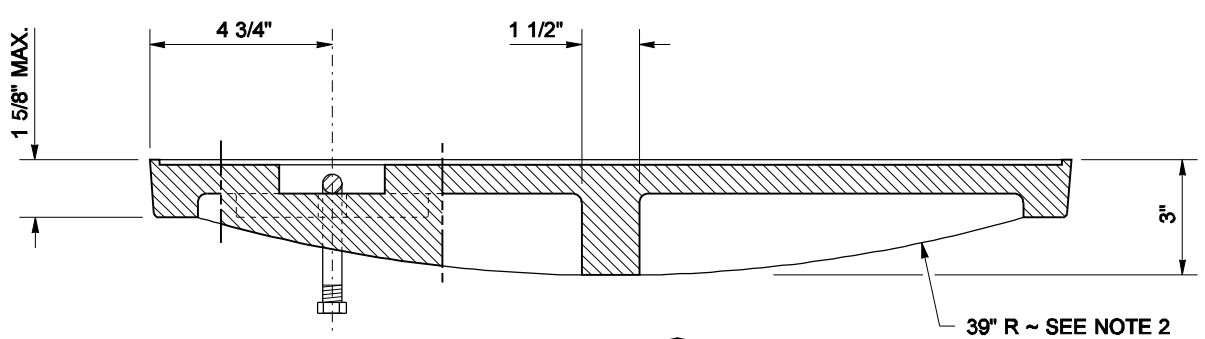

SECTION A

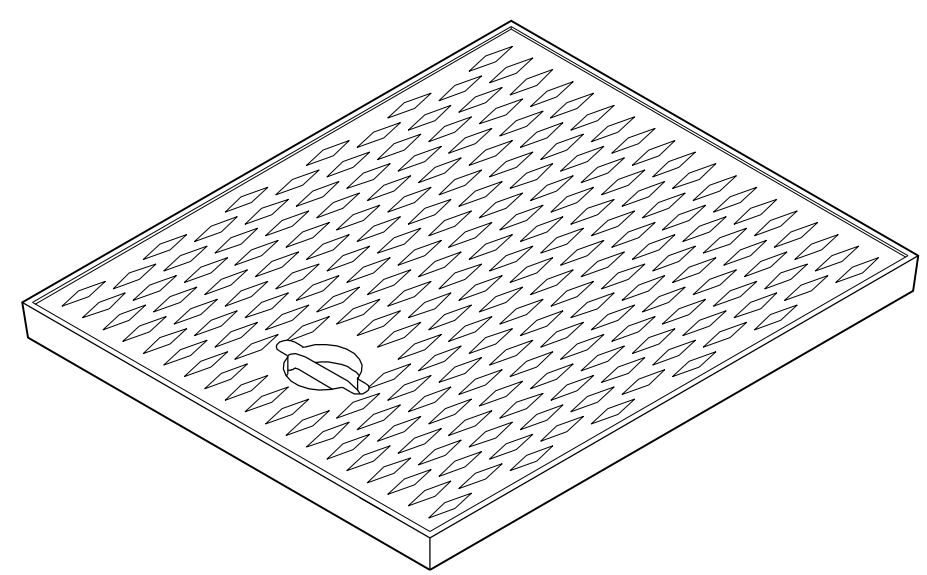

ISOMETRIC

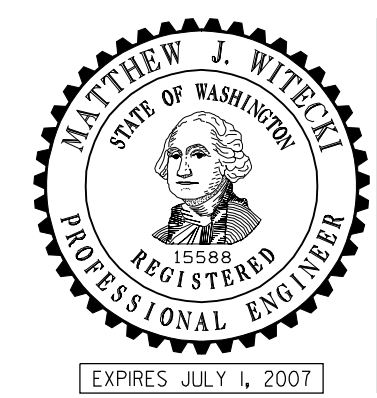

NOTE: THIS PLAN IS NOT A LEGAL ENGINEERING DOCUMENT BUT AN ELECTRONIC DUPLICATE. THE ORIGINAL, SIGNED BY THE ENGINEER AND APPROVED FOR PUBLICATION, IS KEPT ON FILE AT THE WASHINGTON STATE DEPARTMENT OF TRANSPORTATION. A COPY MAY BE OBTAINED UPON REQUEST.

RECTANGULAR SOLID METAL COVER

STANDARD PLAN B-30.20-01

SHEET 1 OF 1 SHEET

APPROVED FOR PUBLICATION

Kevin J. Dayton — STATE DESIGN ENGINEER

11-21-06 — DATE

Washington State Department of Transportation

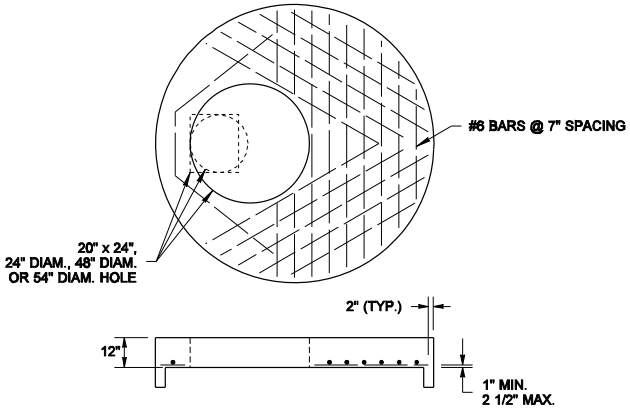

84" or 96" FLAT SLAB TOP

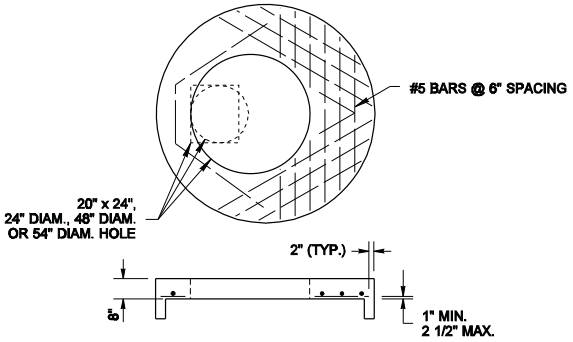

72" FLAT SLAB TOP

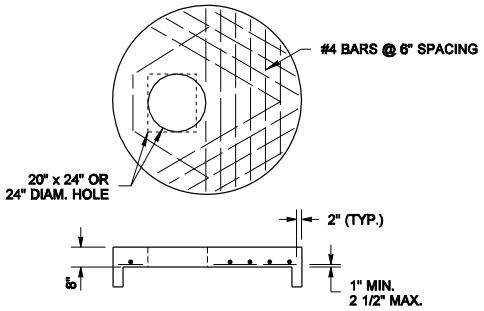

48", 54", or 60" FLAT SLAB TOP

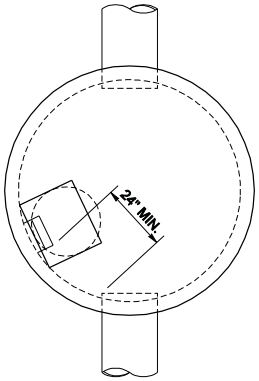

TYPICAL ORIENTATION FOR ACCESS AND STEPS

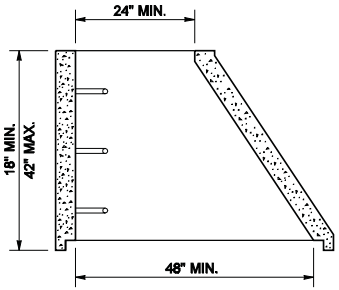

ECCENTRIC CONE SECTION

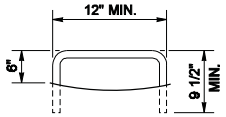

STEP

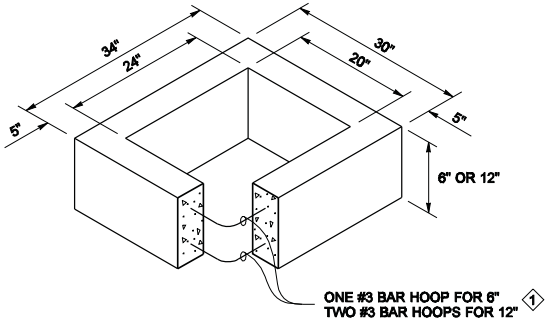

RECTANGULAR ADJUSTMENT SECTION

1 As an acceptable alternative to rebar, wire mesh having a minimum area of 0.12 square inches per foot may be used for adjustment sections.

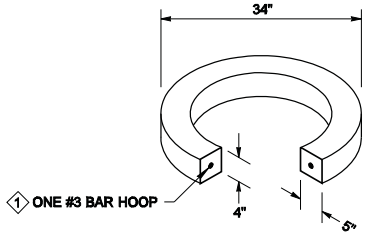

CIRCULAR ADJUSTMENT SECTION

NOTE

Ladder rungs for manholes and catch basins shall meet the requirements of AASHTO M 199.

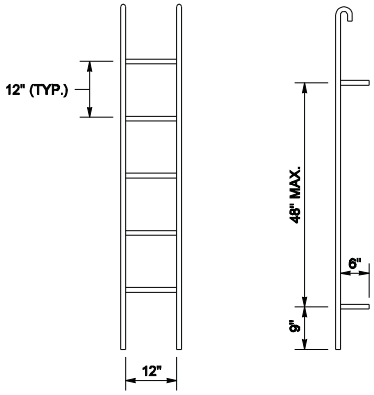

PREFABRICATED LADDER

NOTE: THIS PLAN IS NOT A LEGAL ENGINEERING DOCUMENT BUT AN ELECTRONIC DUPLICATE. THE ORIGINAL, SIGNED BY THE ENGINEER AND APPROVED FOR PUBLICATION, IS KEPT ON FILE AT THE WASHINGTON STATE DEPARTMENT OF TRANSPORTATION. A COPY MAY BE OBTAINED UPON REQUEST.

MISCELLANEOUS DETAILS FOR DRAINAGE STRUCTURES STANDARD PLAN B-30.90-01

SHEET 1 OF 1 SHEET

APPROVED FOR PUBLICATION

Pasco Bakotich III — STATE DESIGN ENGINEER

09-20-07 — DATE

Washington State Department of Transportation

DRAWN BY: ADAM COCHRAN

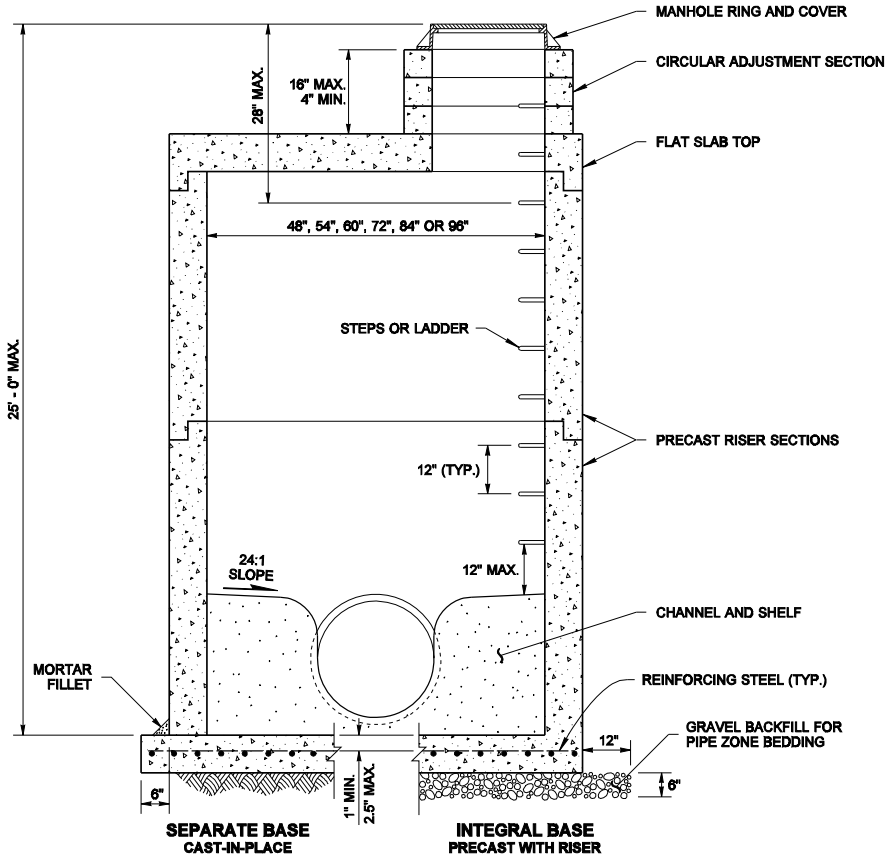

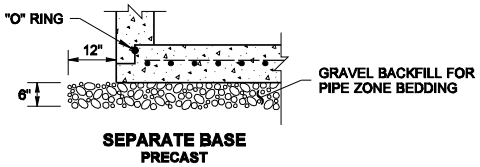

NOTE

Knockouts shall have a wall thickness of 2" minimum to 2.5" maximum.

MANHOLE DIMENSION TABLE

DIAM.	WALL THICKNESS	BASE THICKNESS	MAXIMUM KNOCKOUT SIZE	MINIMUM DISTANCE BETWEEN KNOCKOUTS	BASE REINFORCING STEEL in^2/ft. IN EACH DIRECTION	
					SEPARATE BASE	INTEGRAL BASE
48"	4"	6"	36"	8"	0.23	0.15
54"	4.5"	8"	42"	8"	0.19	0.19
60"	5"	8"	48"	8"	0.25	0.25
72"	6"	8"	60"	12"	0.35	0.24
84"	8"	12"	72"	12"	0.39	0.29
96"	8"	12"	84"	12"	0.39	0.29

EXPIRES JULY 1, 2007

NOTE: THIS PLAN IS NOT A LEGAL ENGINEERING DOCUMENT BUT AN ELECTRONIC DUPLICATE. THE ORIGINAL, SIGNED BY THE ENGINEER AND APPROVED FOR PUBLICATION, IS KEPT ON FILE AT THE WASHINGTON STATE DEPARTMENT OF TRANSPORTATION. A COPY MAY BE OBTAINED UPON REQUEST.

MANHOLE TYPE 3

STANDARD PLAN B-15.60-00

SHEET 1 OF 1 SHEET

APPROVED FOR PUBLICATION

Harold J. Peterfeso — STATE DESIGN ENGINEER

06-01-06 — DATE

Washington State Department of Transportation

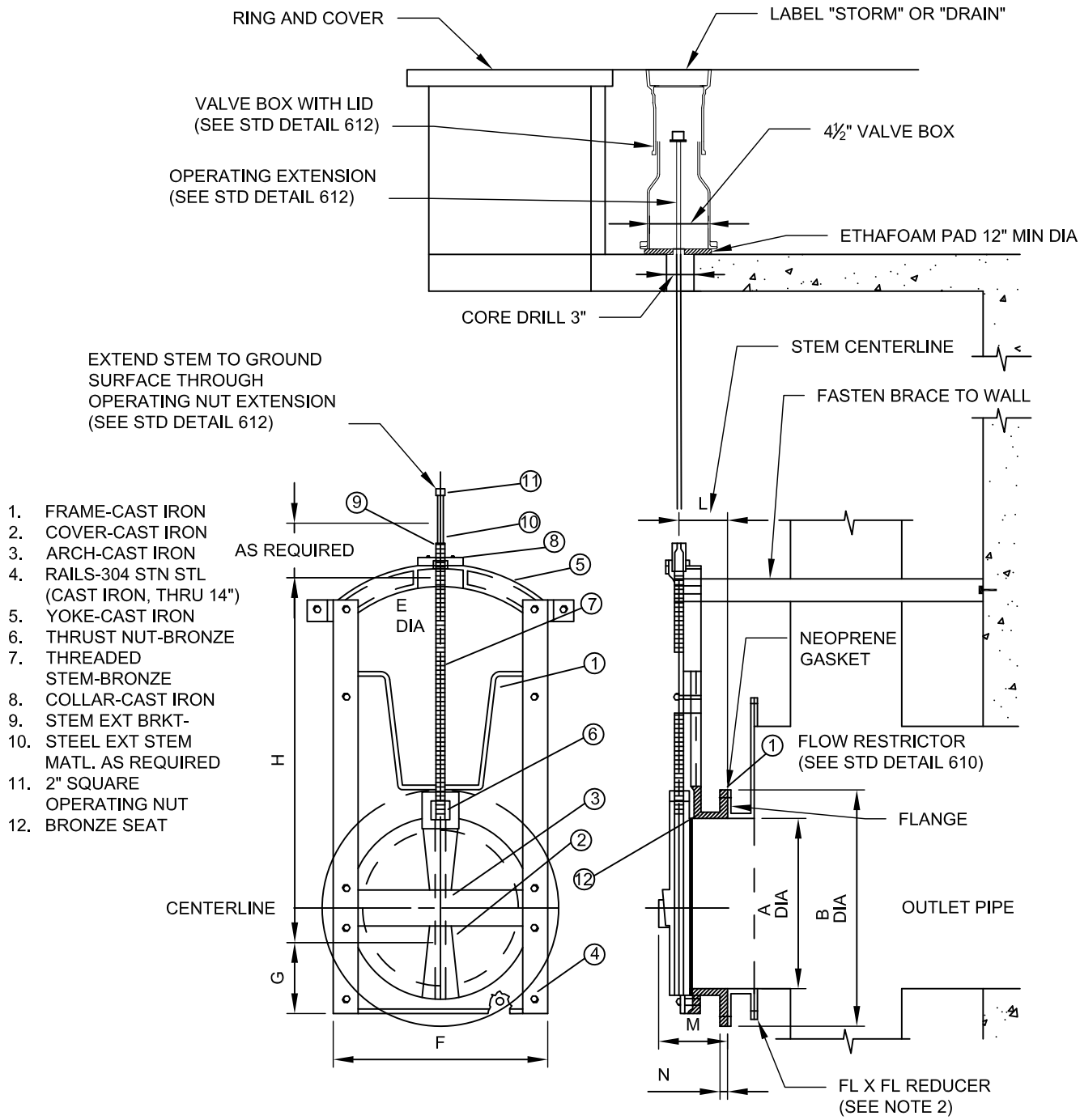

1. FRAME-CAST IRON
2. COVER-CAST IRON
3. ARCH-CAST IRON
4. RAILS-304 STN STL (CAST IRON, THRU 14")
5. YOKE-CAST IRON
6. THRUST NUT-BRONZE
7. THREADED STEM-BRONZE
8. COLLAR-CAST IRON
9. STEM EXT BRKT-
10. STEEL EXT STEM MATL. AS REQUIRED
11. 2" SQUARE OPERATING NUT
12. BRONZE SEAT

	A	B	E	F	G	H	L	M	N
DIMENSIONS (IN INCHES)	8	11 ¾	⅞	11 ⅛	5 ½	17 ⅝	4 1/2	7	¾

NOTES:

1. AWWA C509 RESILIENT SEATED GATE VALVE MAY BE SUBSTITUTED FOR STORMWATER VALVE PER ENGINEER'S APPROVAL.
2. CONSTRUCT FLOW RESTRICTOR TO ACCOMMODATE 8" FLANGE CONNECTION FOR VALVE. MAY USE 8" X OUTLET PIPE DIAMETER FLANGED REDUCER OR ACCEPTED EQUIVALENT.

CITY OF REDMOND, WASHINGTON			STANDARD DETAILS
APPROVED BY: RON GRANT CITY ENGINEER			**STORMWATER VALVE**
REVISION DATE: MARCH 01, 2012			FILE NAME: SD611.DWG / DETAIL NUMBER: **611**

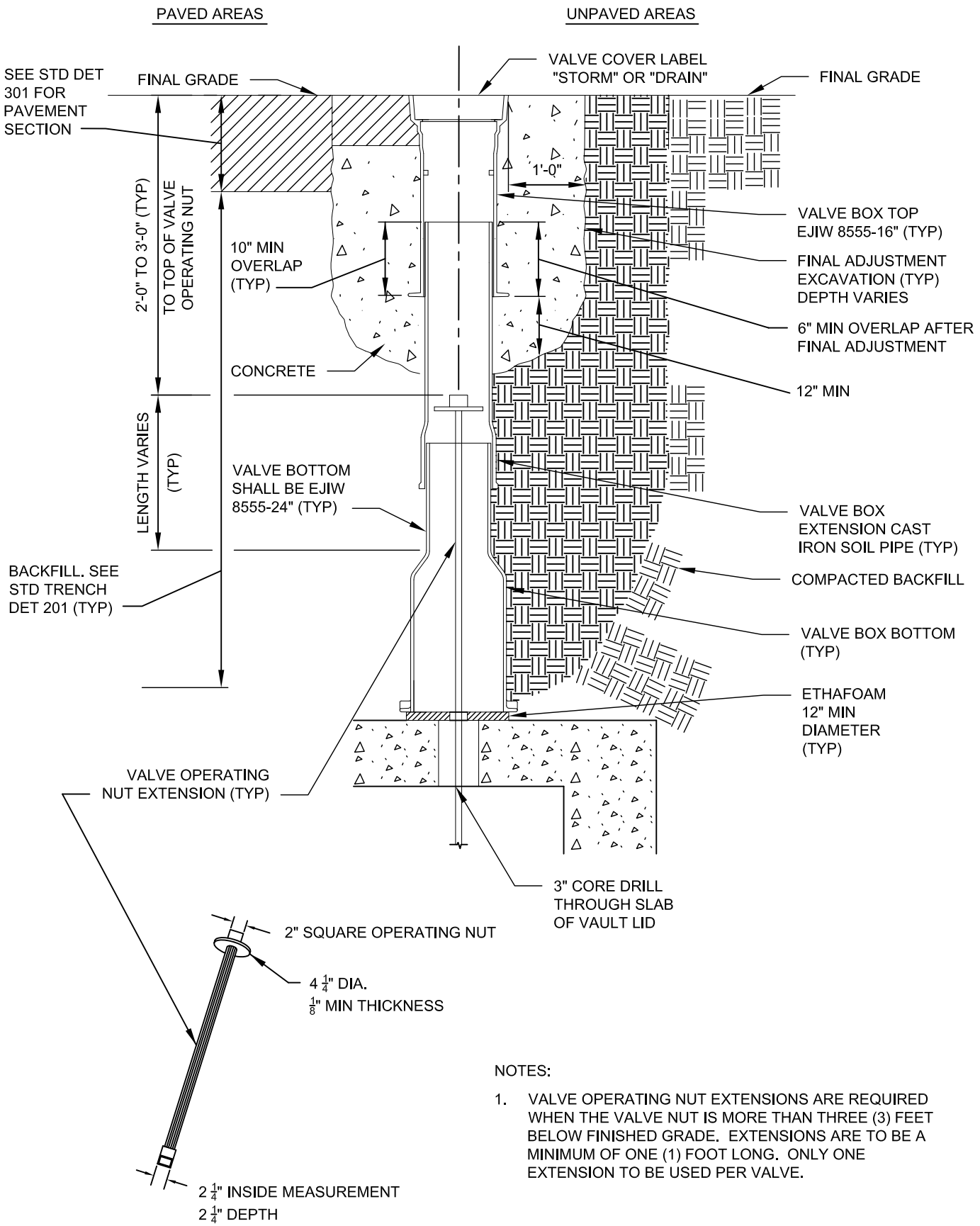

NOTES:

1. VALVE OPERATING NUT EXTENSIONS ARE REQUIRED WHEN THE VALVE NUT IS MORE THAN THREE (3) FEET BELOW FINISHED GRADE. EXTENSIONS ARE TO BE A MINIMUM OF ONE (1) FOOT LONG. ONLY ONE EXTENSION TO BE USED PER VALVE.

CITY OF REDMOND, WASHINGTON			STANDARD DETAILS
APPROVED BY: RON GRANT CITY ENGINEER			**STORMWATER VALVE BOX AND EXTENSION**
REVISION DATE: MARCH 01, 2012			FILE NAME: SD612.DWG / DETAIL NUMBER: **612**

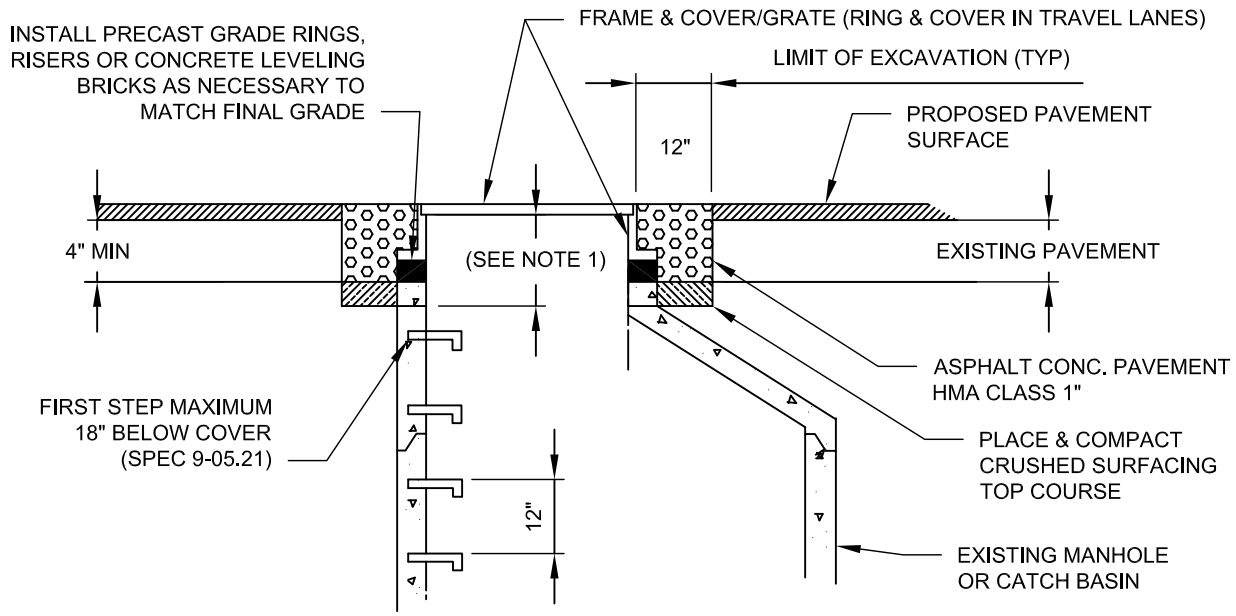

PAVED AREAS

NTS

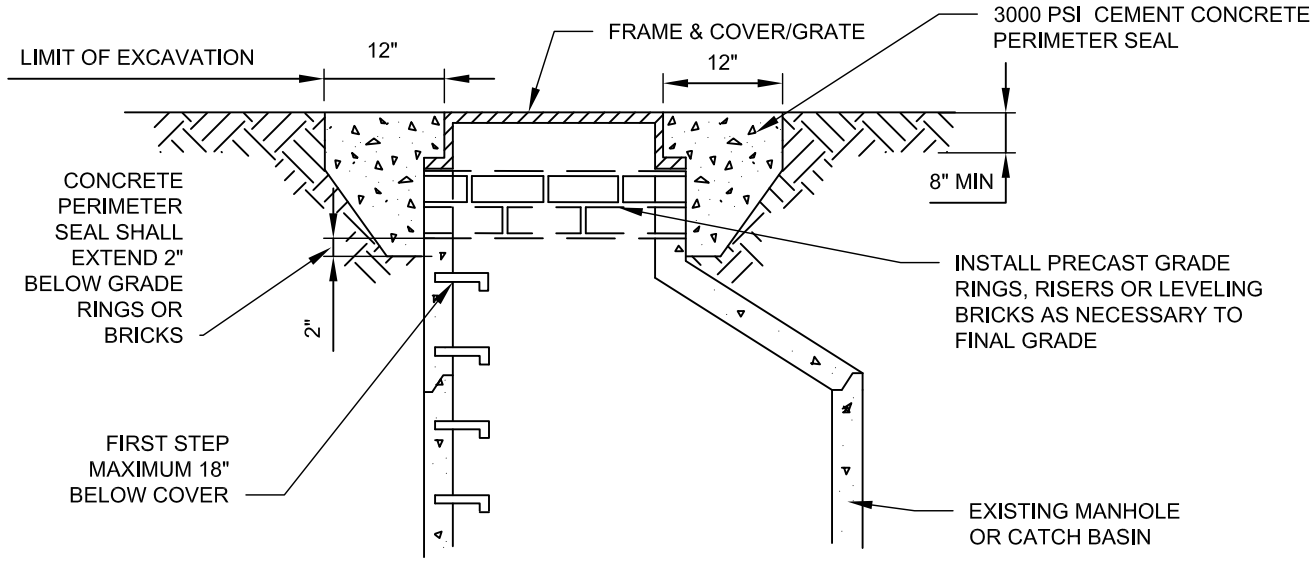

UNPAVED AREAS

NTS

NOTES:

1. WHERE DEPTH OF NECK EXCEEDS 24 INCHES, ADJUST MANHOLE/CATCH BASIN TO GRADE BY INSERTING NEW BARREL SECTION BETWEEN THE CONE/SLAB AND EXISTING BARREL.
2. GRADE RINGS, CONCRETE RISERS AND CONCRETE BRICK SHALL BE SET IN ¾" NON-SHRINK GROUNT, PLASTER SMOOTH INSIDE AND OUT.
3. STEPS OR HAND HOLDS SHALL BE ADDED AS NEEDED, PER SPEC 9-05.21. DO NOT HANG A LADDER FROM THE TOP STEP.
4. PRECAST GRADE RINGS AND RISERS MUST BE CAST WITH GROOVE TO ALLOW FIELD INSTALLATION OF SAFETY STEP.
5. REPLACE EXISTING FRAME AND COVER/GRATE IF NON-STANDARD OR WORN. IF STRUCTURE IS IN TRAVEL LANE, REPLACE FRAME AND GRATE WITH RING AND COVER. SEE STD DETAIL 631.
6. GROUT INSIDE AND OUTSIDE OF MANHOLE/CATCH BASIN NECK TO ACHIEVE WATER TIGHT CONSTRUCTION. FINISH SMOOTH THE INSIDE OF THE NECK. USE NON-SHRINK GROUT ONLY.
7. LOCKING RING AND COVERS ARE REQUIRED IN ALL UNPAVED AREAS AND EASEMENTS. LOCKING RING AND COVER SHALL CONFORM TO STANDARD SPEC 9-05.15(2).

CITY OF REDMOND, WASHINGTON			STANDARD DETAILS
APPROVED BY: RON GRANT CITY ENGINEER	RONALD D. GRANT STATE OF WASHINGTON 22521 REGISTERED PROFESSIONAL ENGINEER	CityofRedmond WASHINGTON	**STORMWATER MANHOLE/CATCH BASIN ADJUSTMENT DETAIL**
REVISION DATE: MARCH 01, 2012			FILE NAME: SD615.DWG / DETAIL NUMBER: **615**

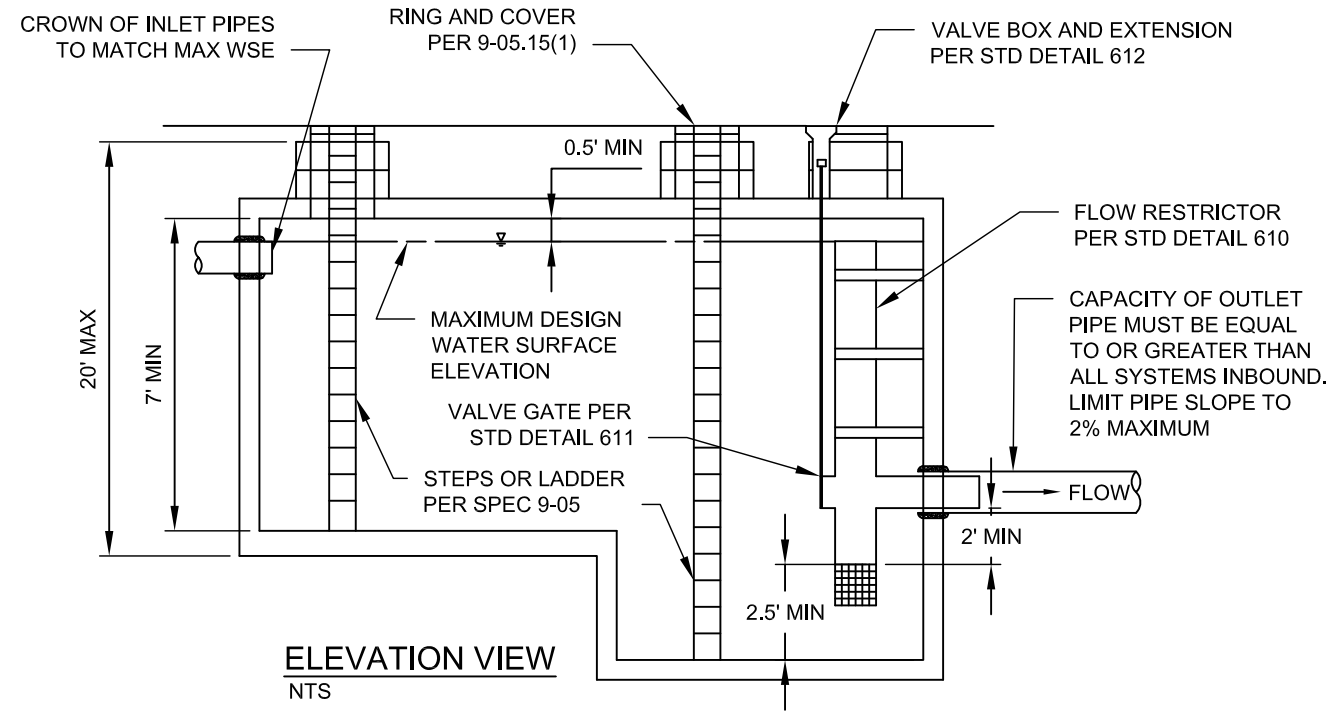

ELEVATION VIEW
NTS

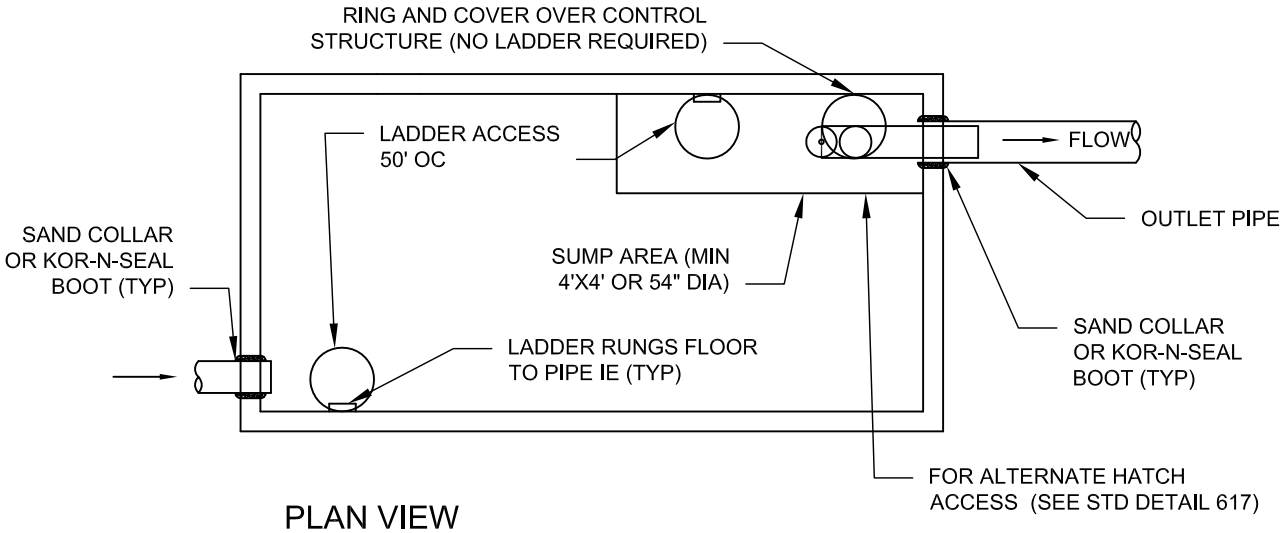

PLAN VIEW
NTS

NOTES:

1. PROVIDE LADDER RUNGS (SPEC 9-05.21) IMMEDIATELY ADJACENT TO ALL INLET/OUTLET PIPES.
2. APPLY NON-SHRINK GROUT TO INSIDE AND OUTSIDE OF ALL JOINTS, RINGS, RISERS AND FRAMES.
3. ALL PIPES SHALL BE PERPENDICULAR TO FACE OF VAULT.
4. PENETRATE CARRIER PIPE THROUGH VAULT WALL.
5. SLIP SMOOTH-BORE HORIZONTAL LEG OF FLOW CONTROL TEE INSIDE CARRIER PIPE.

CITY OF REDMOND, WASHINGTON	RONALD D. GRANT STATE OF WASHINGTON 22521 REGISTERED PROFESSIONAL ENGINEER	CityofRedmond WASHINGTON	STANDARD DETAILS
APPROVED BY: RON GRANT CITY ENGINEER			**DETENTION VAULT ACCESS MANHOLE LID OVER LOW POINT**
REVISION DATE: MARCH 01, 2012			FILE NAME: SD616.DWG / DETAIL NUMBER: **616**

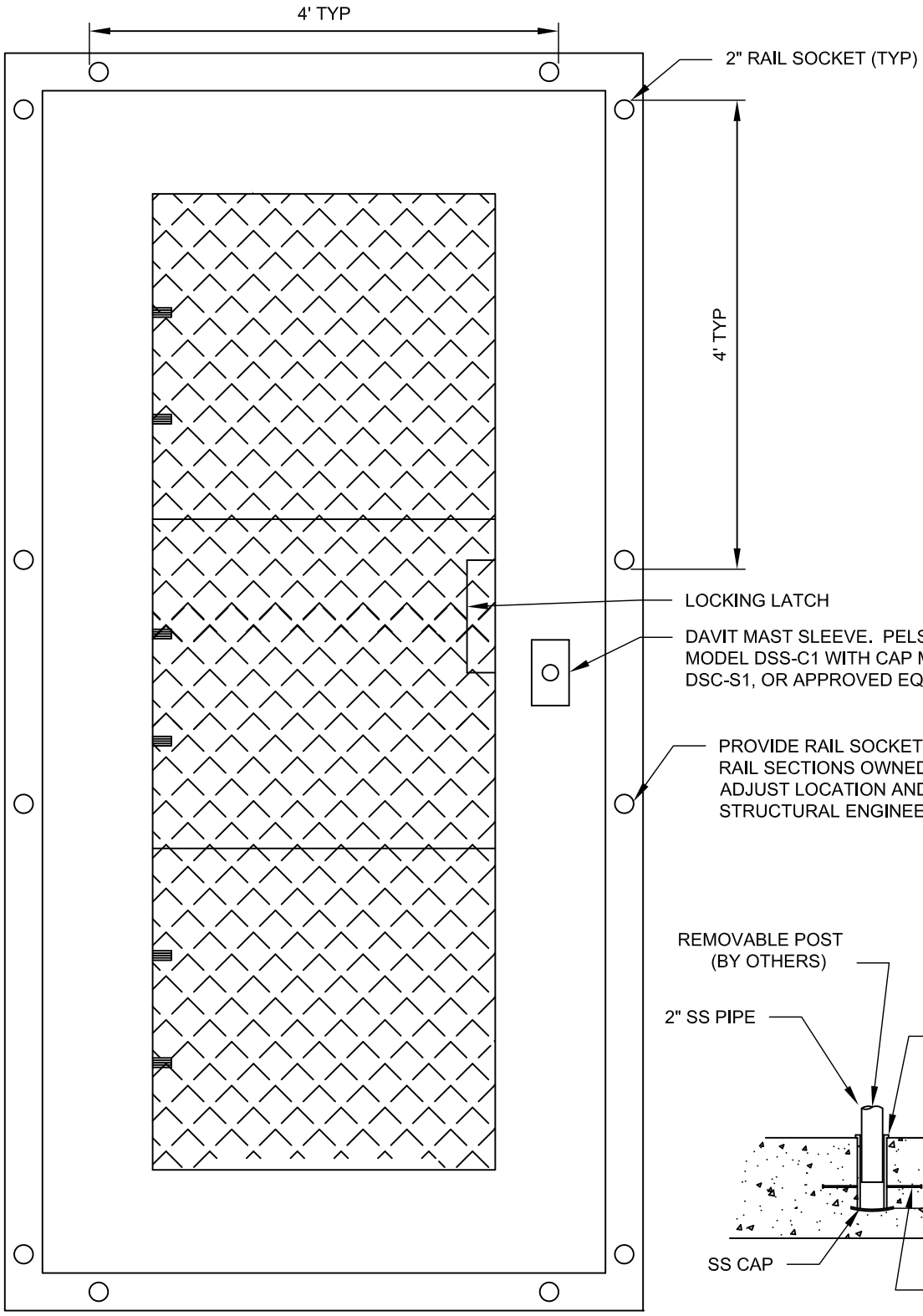

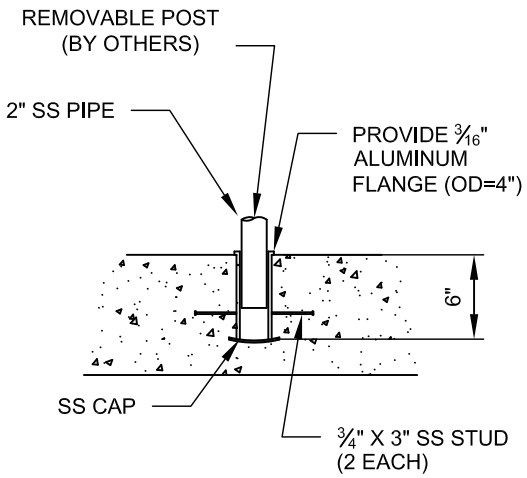

RAIL SOCKET DETAIL

NTS

CITY OF REDMOND, WASHINGTON			STANDARD DETAILS
APPROVED BY: RON GRANT CITY ENGINEER			**ALTERNATE VAULT ACCESS**
REVISION DATE: MARCH 01, 2012			FILE NAME: SD617.DWG / DETAIL NUMBER: **617**

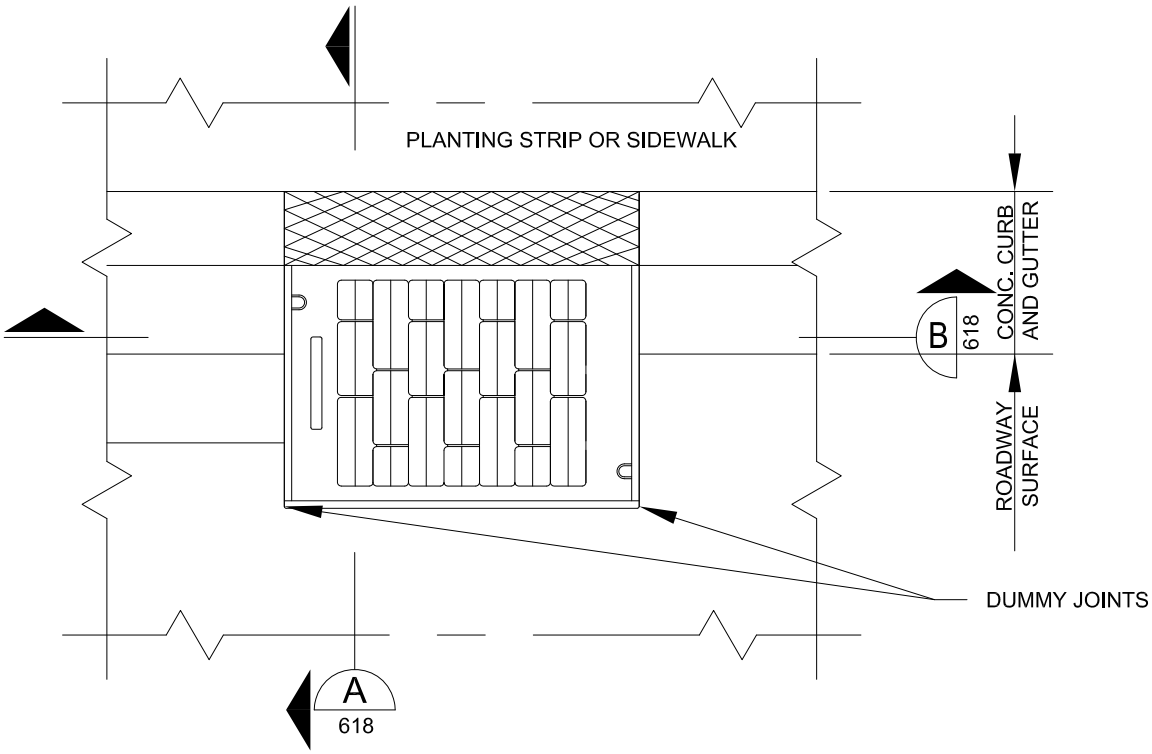

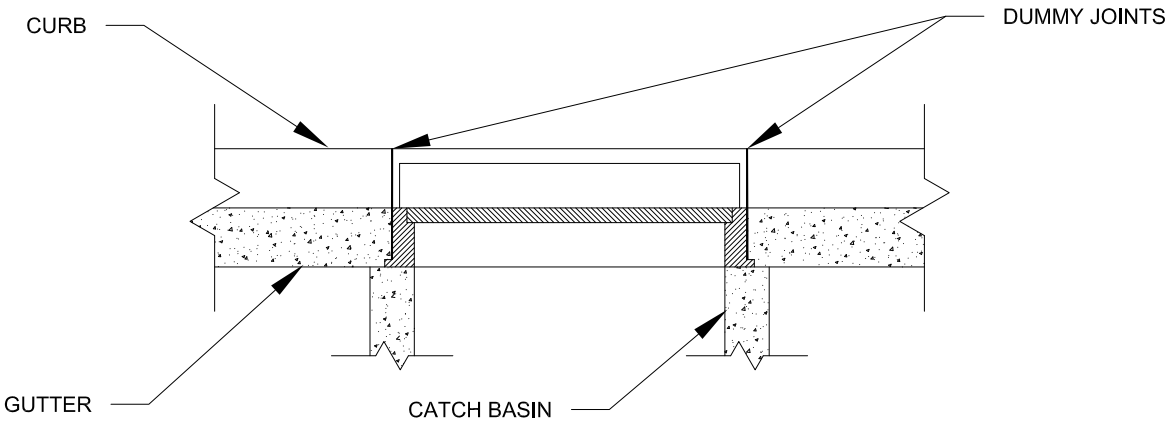

SECTION B 618
NTS

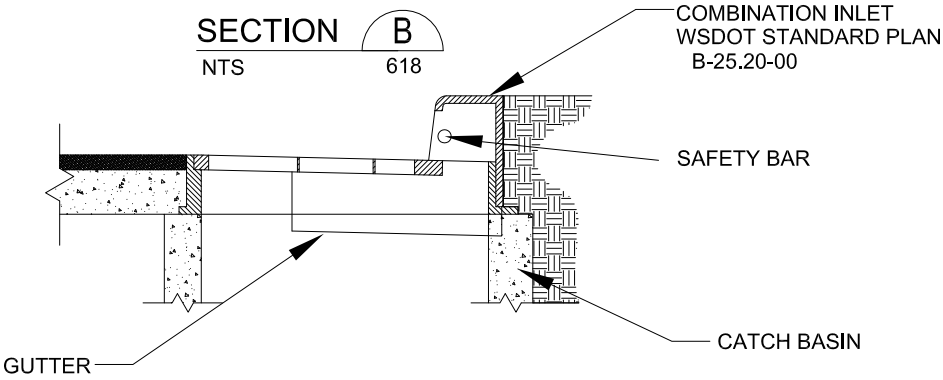

SECTION A 618
NTS

NOTES:
1. SET TO GRADE AND CONSTRUCT ROAD AND GUTTER TO BE FLUSH WITH FRAME.
2. SEE DETAIL NUMBER: 303 FOR JOINT REQUIREMENTS.

CITY OF REDMOND, WASHINGTON			STANDARD DETAILS
APPROVED BY: RON GRANT CITY ENGINEER			**THRU CURB INLET FRAME AND GRATE WITH VERTICAL CURB INSTALLATION**
REVISION DATE: MARCH 01, 2011			FILE NAME: SD618.DWG / DETAIL NUMBER: **618**

DRAWN BY: MARK SUJKA

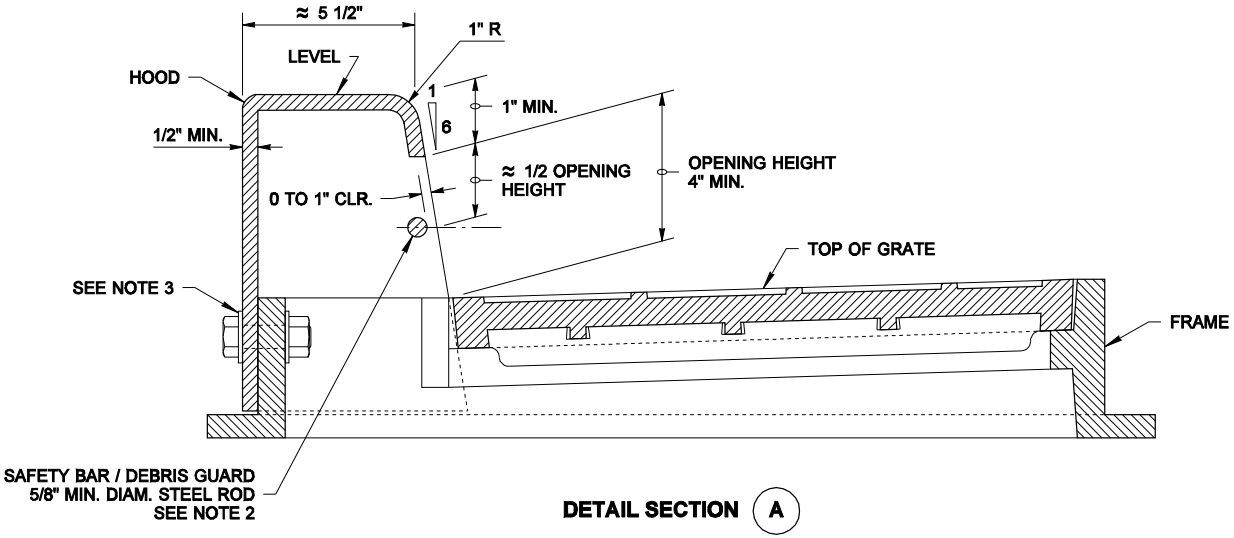

DETAIL SECTION (A)

NOTES

1. The asymmetry of the Combination Inlet shall be considered when calculating the offset distance for the catch basin. See **SECTION A**.
2. The dimensions of the Frame and Hood may vary slightly among different manufacturers. The Frame may have cast features intended to support a grate guard. Hood units shall mount outside of the Frame. The methods for fastening the Safety Bar / Debris Guard Rod to the Hood may vary. The Hood may include casting lugs. The top of the Hood may be cast with a pattern.
3. Attach the Hood to the frame with two 3/4" × 2" hex head bolts, nuts, and oversize washers. The washers shall have diameters adequate to assure full bearing across the slots.
4. When bolt-down grates are specified in the contract, provide two holes in the frame that are vertically aligned with the grate slots. Tap each hole to accept a 5/8" × - 11 NC × 2" allen head cap screw. Location of bolt-down holes varies among different manufacturers. See **BOLT- DOWN DETAIL** , Standard Plan B-30.10.
5. Only ductile iron Vaned Grates shall be used. See Standard Plans B-30.30 and B-30.40 for grate details. Refer to Standard Specification 9-05.15(2) for additional requirements.
6. This plan is intended to show the installation details of a manufactured product. It is not the intent of this plan to show the specific details necessary to fabricate the castings shown on this drawing.

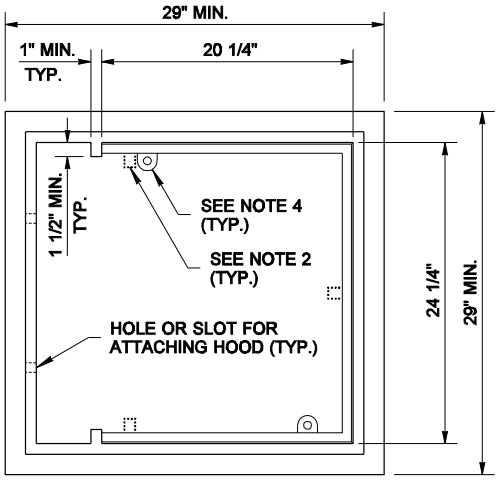

TOP VIEW

FRAME DETAIL

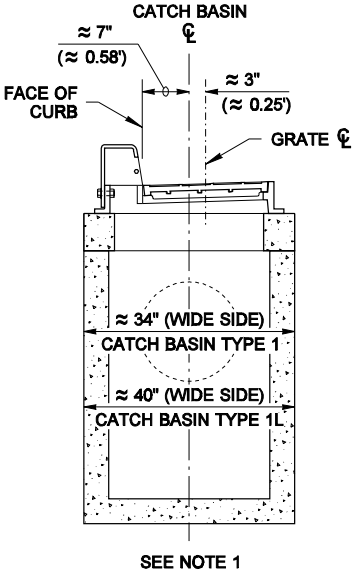

SECTION (A)

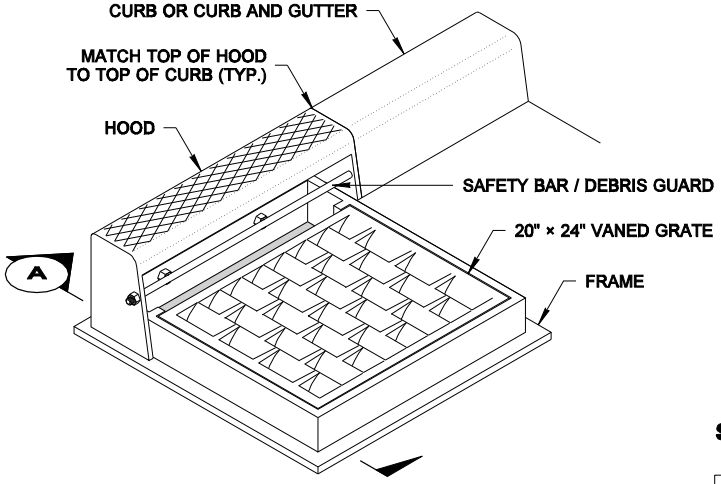

ISOMETRIC VIEW

COMBINATION INLET

FRAME, HOOD, AND VANED GRATE

NOTE: THIS PLAN IS NOT A LEGAL ENGINEERING DOCUMENT BUT AN ELECTRONIC DUPLICATE. THE ORIGINAL, SIGNED BY THE ENGINEER AND APPROVED FOR PUBLICATION, IS KEPT ON FILE AT THE WASHINGTON STATE DEPARTMENT OF TRANSPORTATION. A COPY MAY BE OBTAINED UPON REQUEST.

COMBINATION INLET

STANDARD PLAN B-25.20-00

SHEET 1 OF 1 SHEET

APPROVED FOR PUBLICATION

Harold J. Peterfeso — STATE DESIGN ENGINEER — *06-08-06* DATE

Washington State Department of Transportation

DRAWN BY: MARK SUJKA

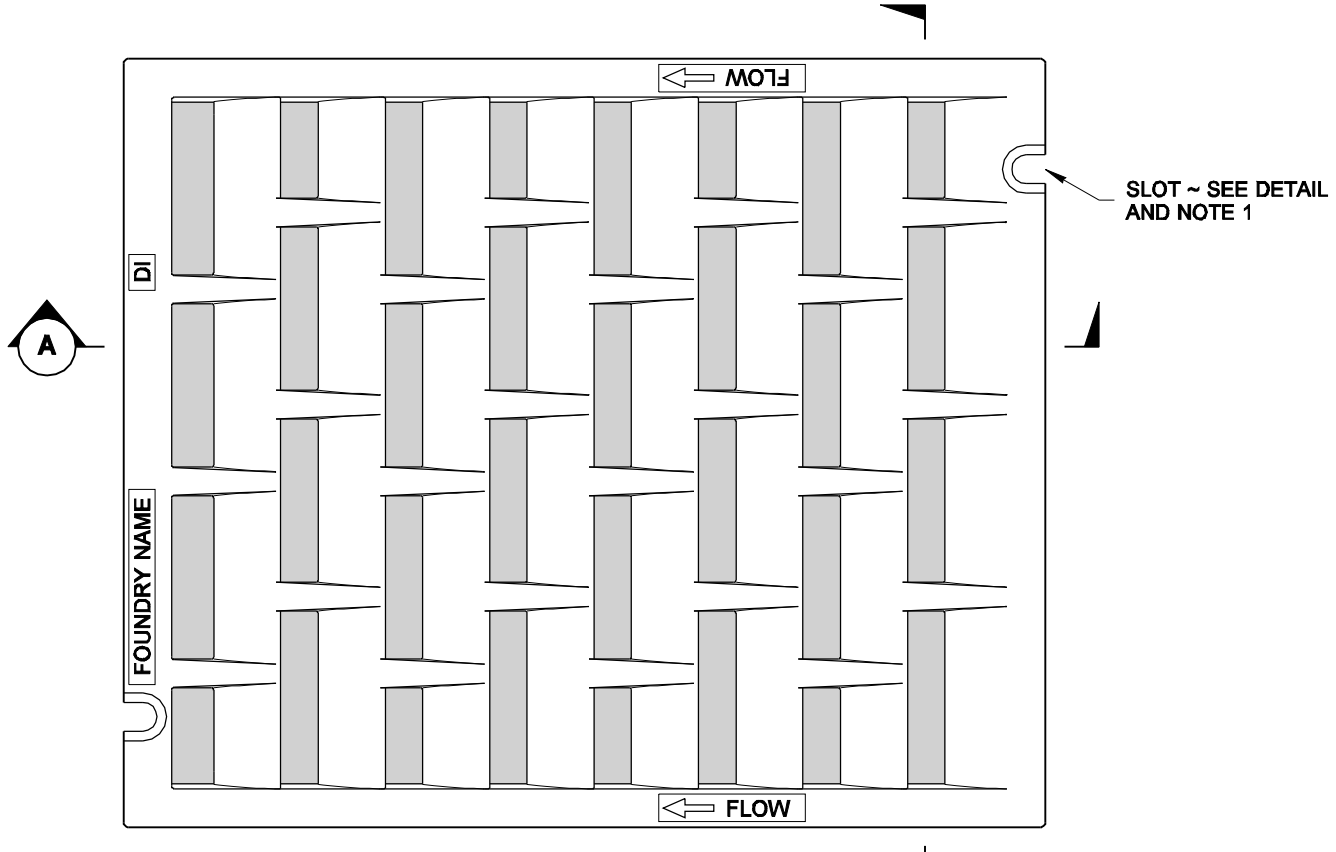

TOP

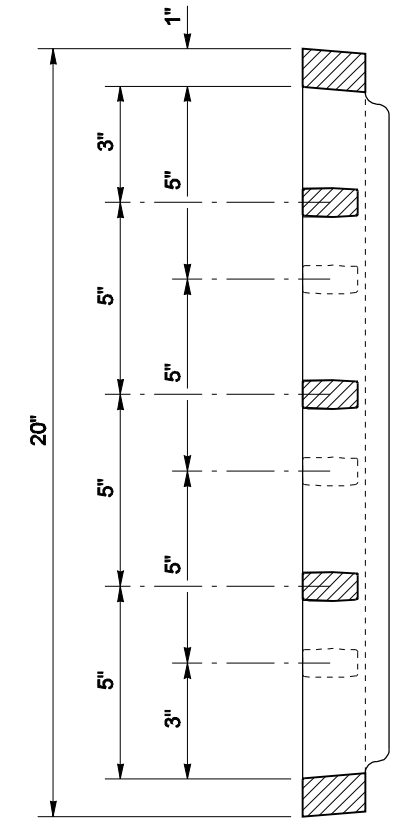

SECTION B

NOTES

1. When bolt-down grates are specified in the Contract, provide two slots in the grate that are vertically aligned with the holes in the frame. Location of bolt-down slots varies among different manufacturers.
2. Refer to Standard Specification 9-05.15(2) for additional requirements.
3. For Frame details, see Standard Plan B-30.10.

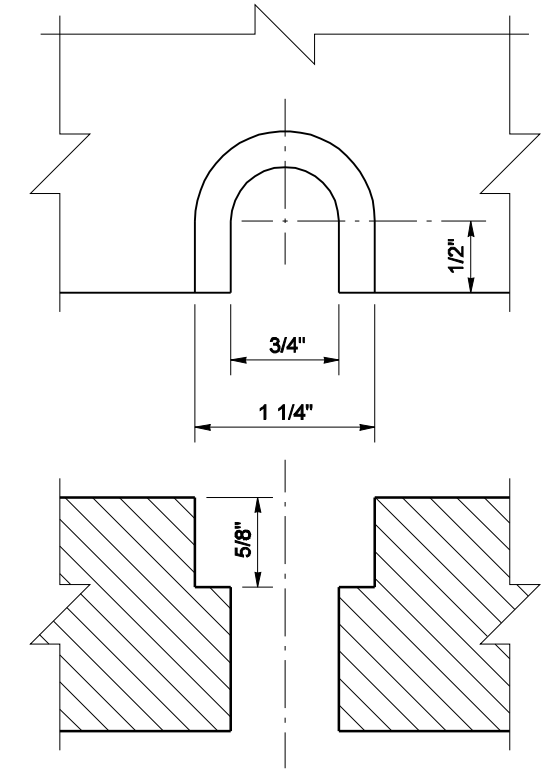

BOLT-DOWN SLOT DETAIL
SEE NOTE 1

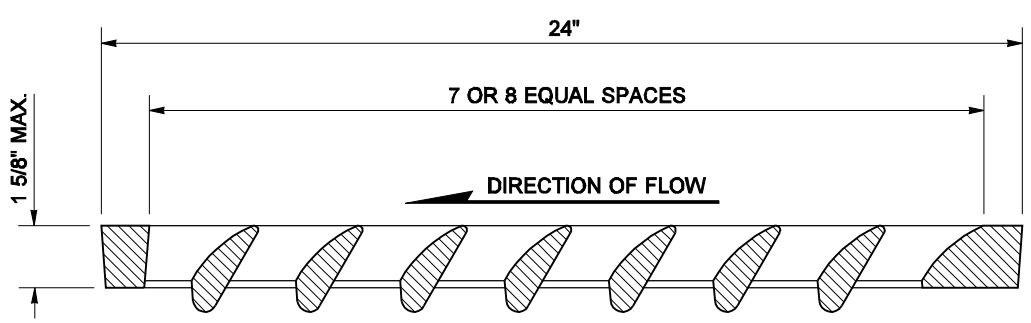

SECTION A

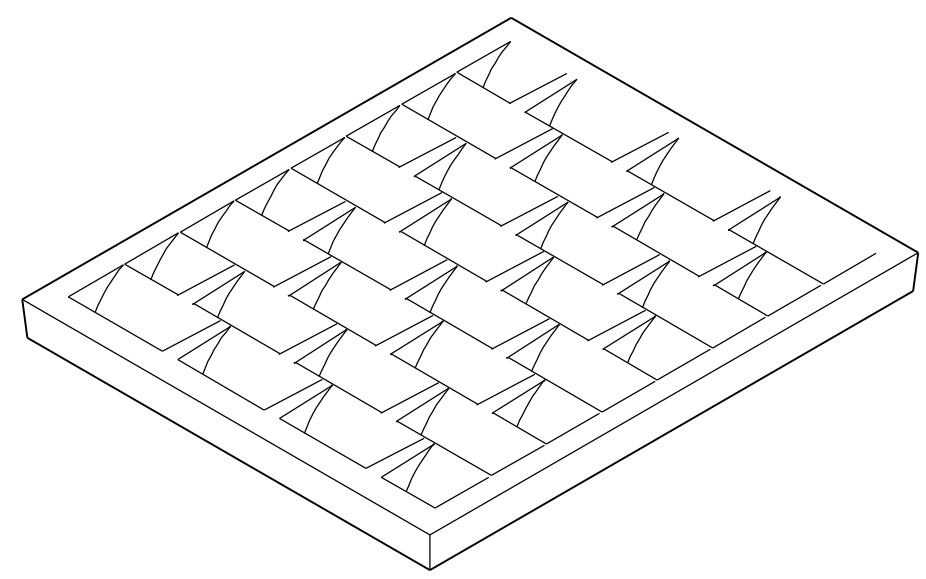

ISOMETRIC

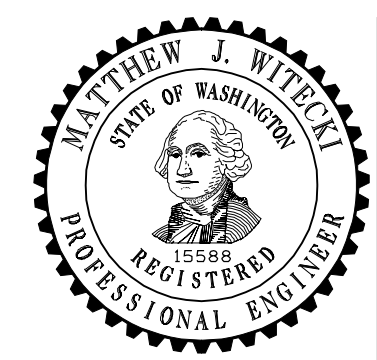

EXPIRES JULY 1, 2007

NOTE: THIS PLAN IS NOT A LEGAL ENGINEERING DOCUMENT BUT AN ELECTRONIC DUPLICATE. THE ORIGINAL, SIGNED BY THE ENGINEER AND APPROVED FOR PUBLICATION, IS KEPT ON FILE AT THE WASHINGTON STATE DEPARTMENT OF TRANSPORTATION. A COPY MAY BE OBTAINED UPON REQUEST.

RECTANGULAR VANED GRATE

STANDARD PLAN B-30.30-00

SHEET 1 OF 1 SHEET

APPROVED FOR PUBLICATION

Harold J. Peterfeso — STATE DESIGN ENGINEER
06-01-06 — DATE

Washington State Department of Transportation

DRAWN BY: MARK SUJKA

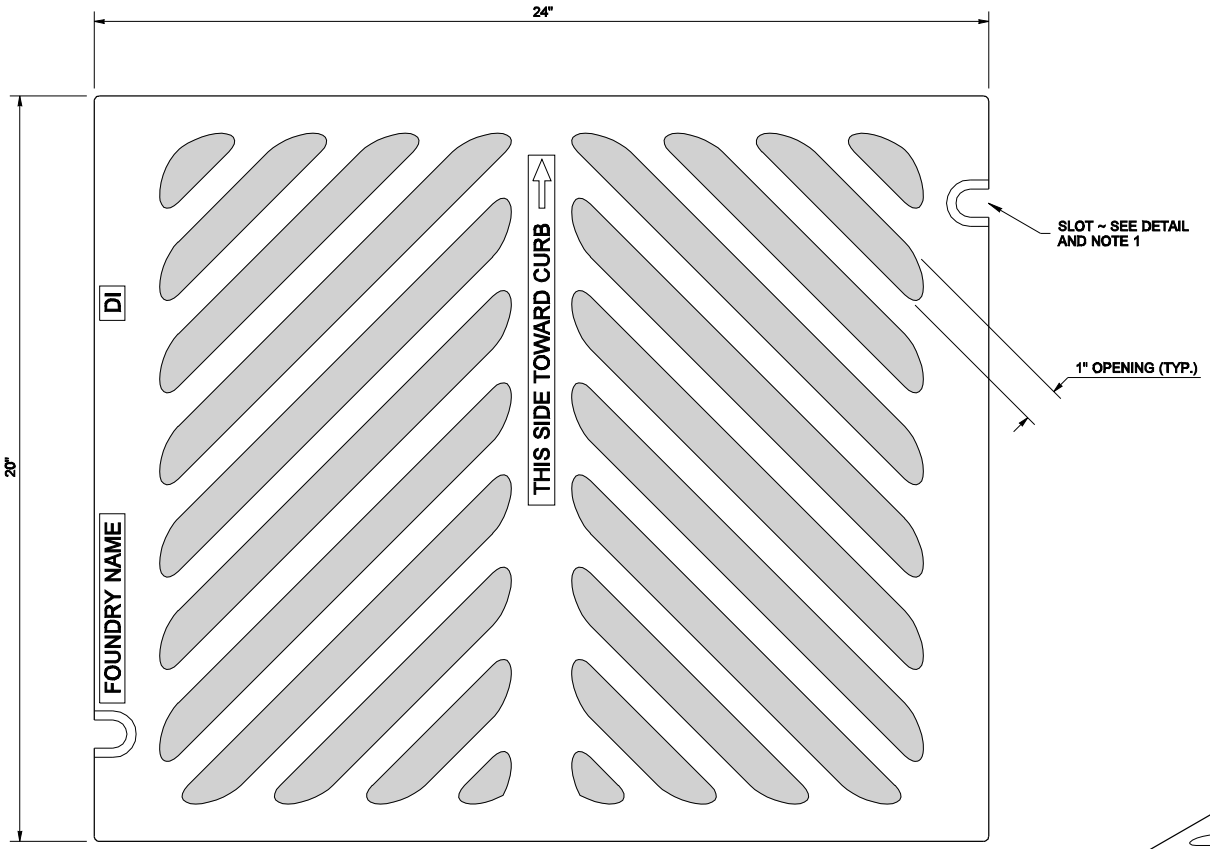

TOP

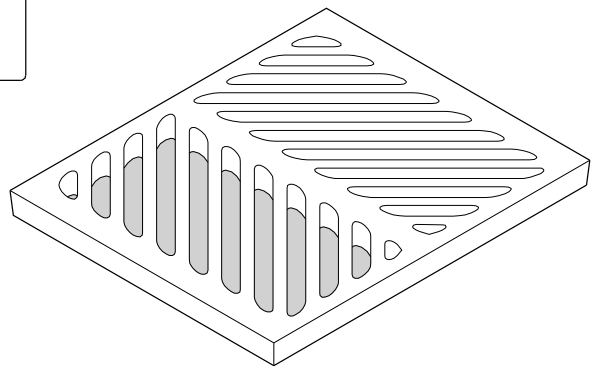

ISOMETRIC

NOTES

1. When bolt-down grates are specified in the Contract, provide two slots in the grate that are vertically aligned with the holes in the frame. Location of bolt-down slots varies among different manufacturers.
2. Refer to Standard Specification 9-05.15(2) for additional requirements.
3. For Frame details, see Standard Plan B-30.10.
4. The thickness of the grate shall not exceed 1 5/8".

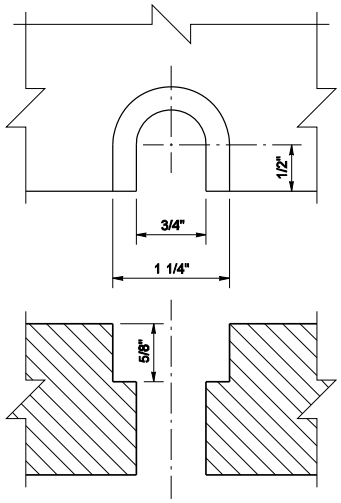

BOLT-DOWN SLOT DETAIL
SEE NOTE 1

NOTE: THIS PLAN IS NOT A LEGAL ENGINEERING DOCUMENT BUT AN ELECTRONIC DUPLICATE. THE ORIGINAL, SIGNED BY THE ENGINEER AND APPROVED FOR PUBLICATION, IS KEPT ON FILE AT THE WASHINGTON STATE DEPARTMENT OF TRANSPORTATION. A COPY MAY BE OBTAINED UPON REQUEST.

RECTANGULAR HERRINGBONE GRATE

STANDARD PLAN B-30.50-00

SHEET 1 OF 1 SHEET

APPROVED FOR PUBLICATION

Harold J. Peterfeso — STATE DESIGN ENGINEER
06-01-06 — DATE

Washington State Department of Transportation

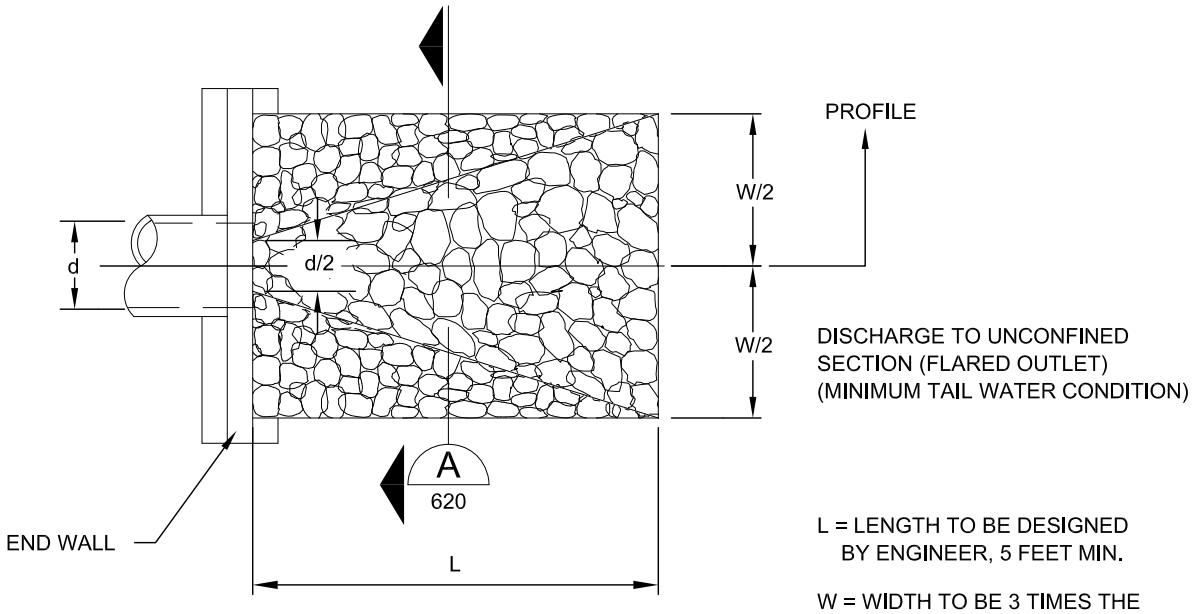

PLAN VIEW
NTS

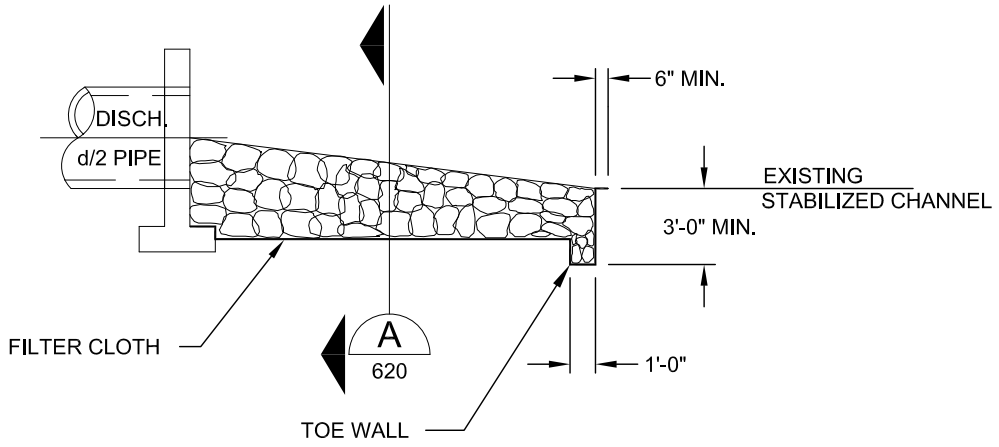

RIP RAP TO BE EMBEDDED IN PROPOSED TRANSITION SECTION.

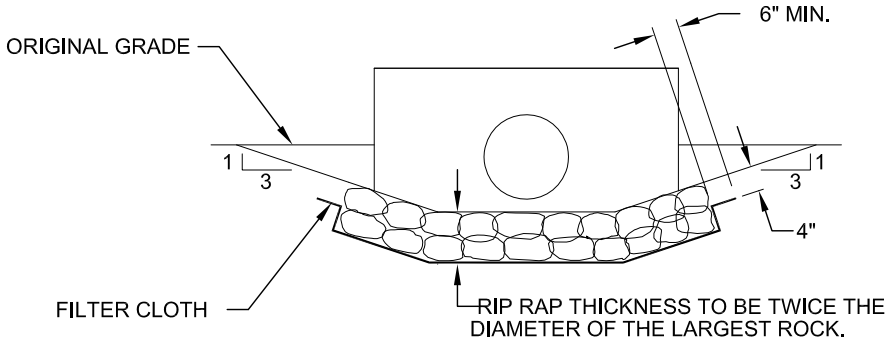

SECTION A
NTS 620

CITY OF REDMOND, WASHINGTON			STANDARD DETAILS
APPROVED BY: RON GRANT CITY ENGINEER			**HEAD WALL AND RIP RAP**
REVISION DATE: MARCH 01, 2011			FILE NAME: SD620.DWG / DETAIL NUMBER: **620**

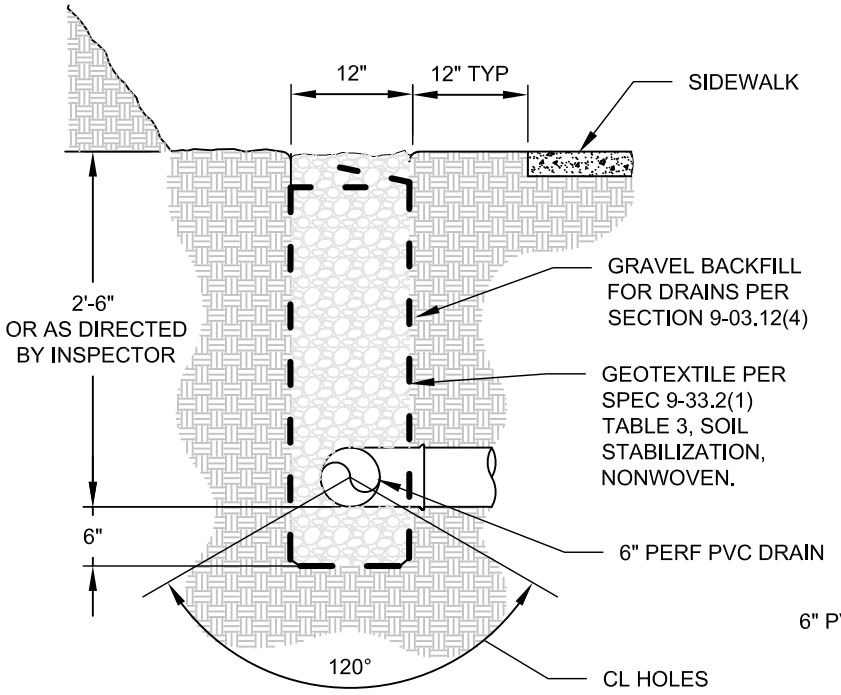

PERF-DRAIN

NTS

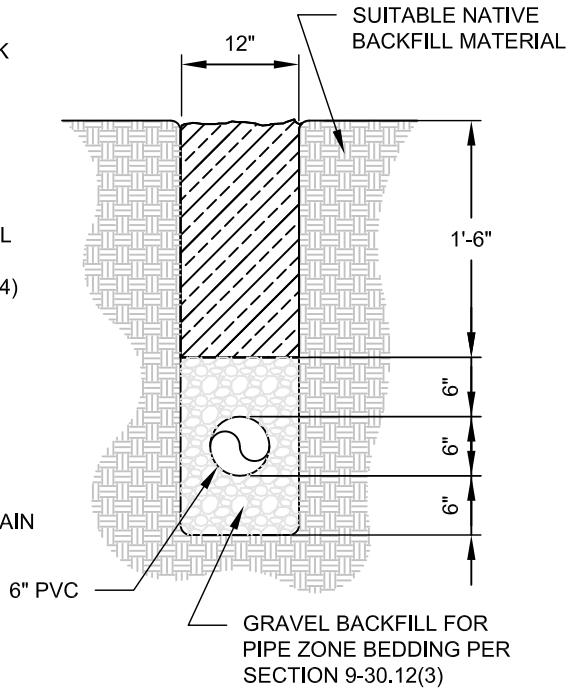

TIGHT-LINE

NTS

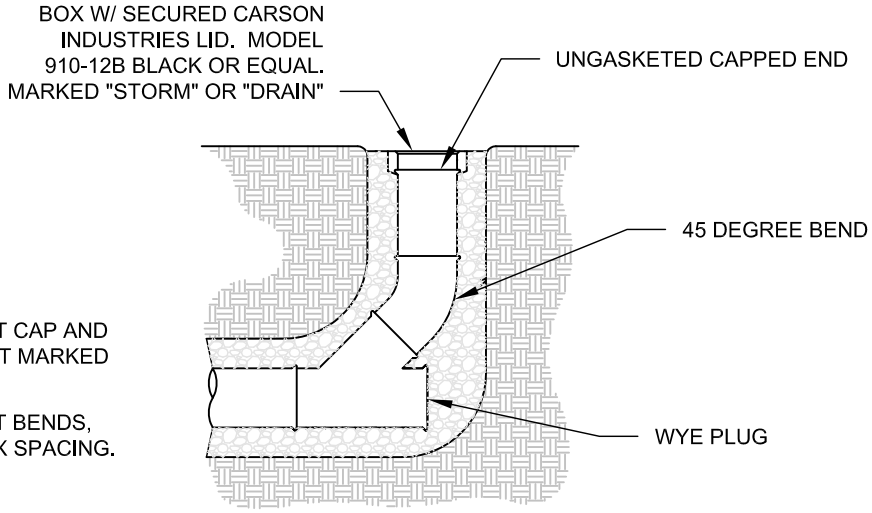

NOTES:

1. LATERALS TO LOTS: WYE TO LOT CAP AND MARK LOCATION WITH 2"X4" POST MARKED "STORM".
2. CLEAN OUT LOCATIONS TO BE AT BENDS, END OF LINES AND AT 75' OC MAX SPACING.

CLEAN OUT

NTS

CITY OF REDMOND, WASHINGTON			STANDARD DETAILS
APPROVED BY: RON GRANT CITY ENGINEER			**LOT DRAIN TRENCH**
REVISION DATE: MARCH 01, 2012			FILE NAME: SD621.DWG / DETAIL NUMBER: **621**

DUMP NO WASTE

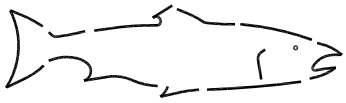

DRAINS TO LAKE

ONLY RAIN

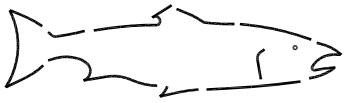

DOWN THE DRAIN

DUMP NO WASTE

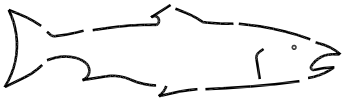

DRAINS TO STREAM

DUMP NO WASTE

PROTECT YOUR

GROUND WATER

NOTES:

1. 2" LETTERS, ACTUAL SIZE 12" X 27".
2. STENCILS ARE AVAILABLE AT THE STORM WATER MANAGEMENT DIVISION OFFICE.
3. ALL STORM DRAINAGE CONSTRUCTION SHALL REQUIRE STENCILING PAVED SURFACE AREA NEAR CATCH BASIN.

STENCILING DETAIL

NTS

CITY OF REDMOND, WASHINGTON			STANDARD DETAILS
APPROVED BY: RON GRANT CITY ENGINEER			**STENCILING DETAIL**
REVISION DATE: MARCH 01, 2011			FILE NAME: SD622.DWG / DETAIL NUMBER: **622**

RONALD D. GRANT — STATE OF WASHINGTON — 22521 — REGISTERED PROFESSIONAL ENGINEER

CityofRedmond WASHINGTON

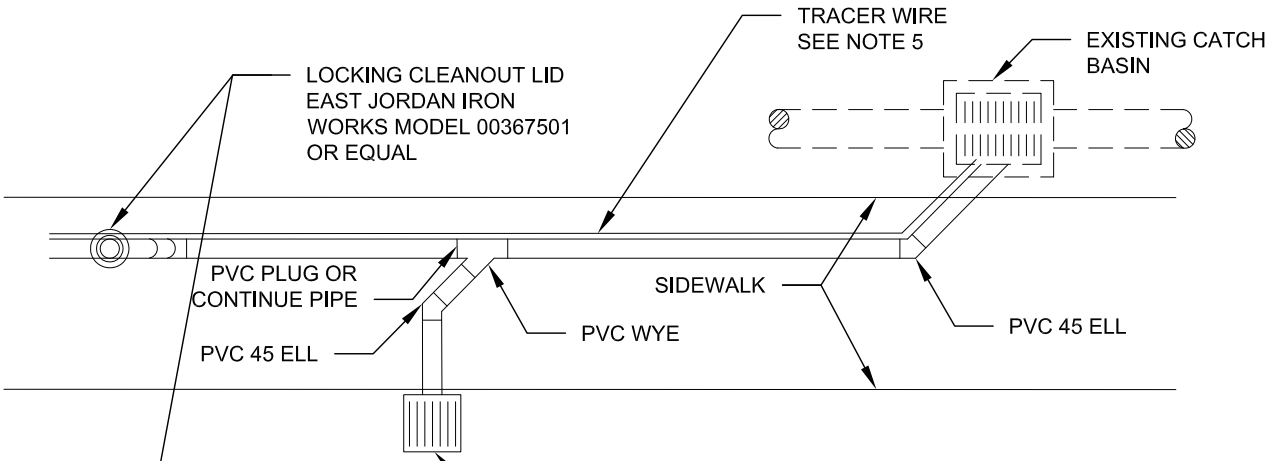

PLAN VIEW

NTS

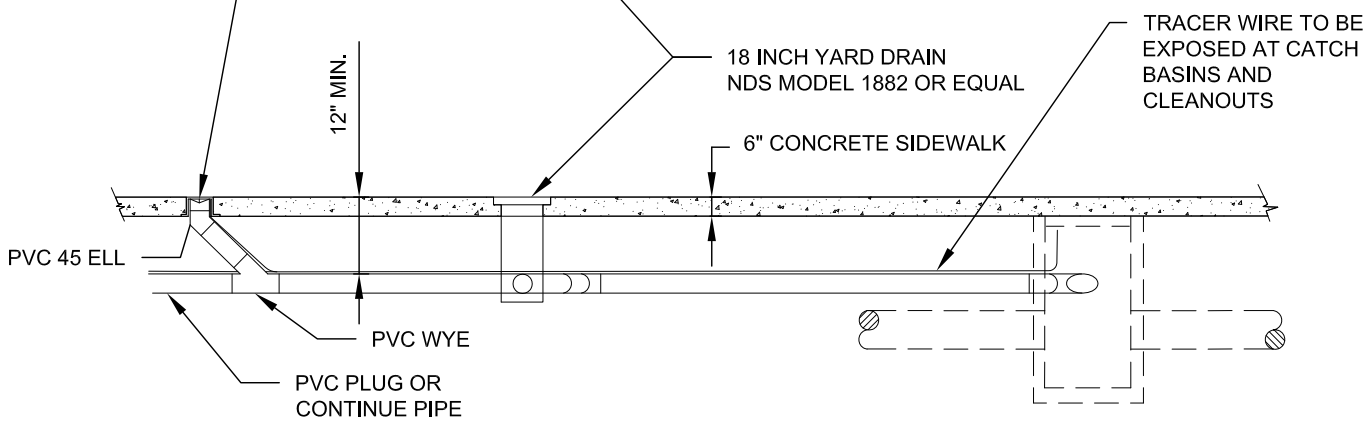

PROFILE VIEW

NTS

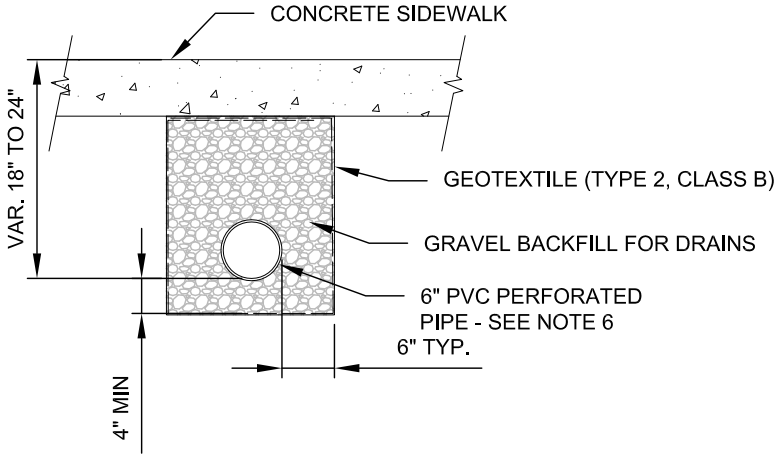

TYPICAL SECTION

NTS

NOTES:

1. MAXIMUM DISTANCE BETWEEN PIPE CLEANOUTS OR YARD DRAINS SHALL BE 75 FEET.
2. FOR NEW CONSTRUCTION, LOCATE YARD DRAINS NEAR PROPERTY LINES. YARD DRAINS MAY BE SHARED BY TWO PROPERTIES.
3. FOR RETROFITS, LOCATE YARD DRAINS AND LIMITS OF SIDEWALK REPLACEMENT AS DIRECTED BY INSPECTOR. REMOVE SIDEWALK TO EXISTING EXPANSION JOINTS.
4. PROTECT ADJACENT WALLS, VEGETATION, DRIVEWAYS, AND OTHER FEATURES.
5. TRACER WIRE TO BE SOLID WIRE 12 GA., AND SHALL BE PLACED FROM START OF RUN AT FIRST MANHOLE TO THE END OF THE UNDERDRAIN.
6. UNDERDRAIN TO BE PERFORATED SCHEDULE 20 PVC.

CITY OF REDMOND, WASHINGTON	RONALD D. GRANT STATE OF WASHINGTON 22521 REGISTERED PROFESSIONAL ENGINEER	CityofRedmond WASHINGTON	STANDARD DETAILS
APPROVED BY: RON GRANT CITY ENGINEER			**SIDEWALK UNDERDRAIN SYSTEM**
REVISION DATE: JUNE 01, 2013			FILE NAME: SD630.DWG / DETAIL NUMBER: **630**

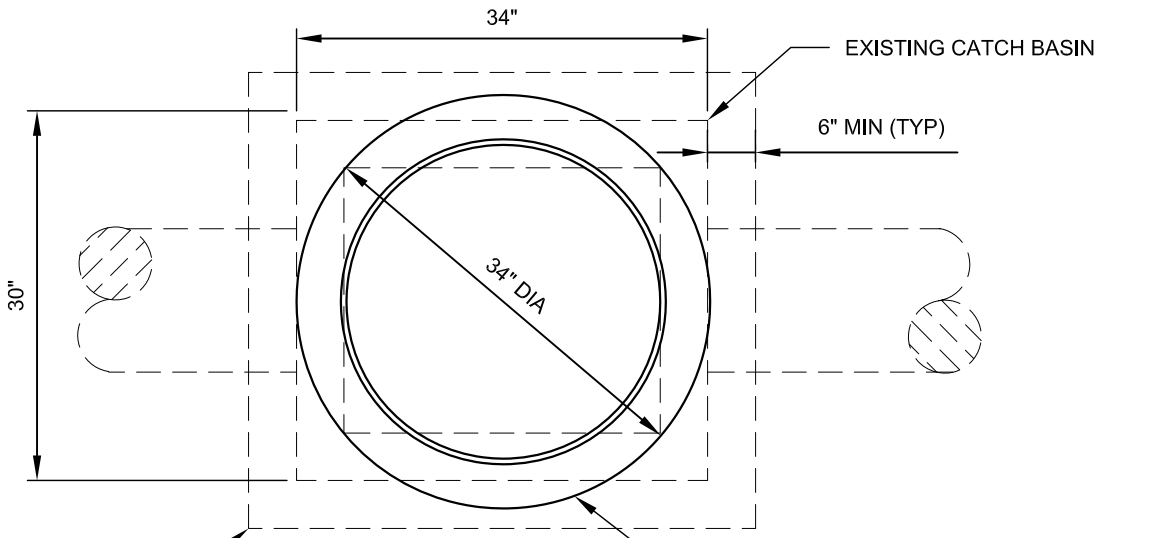

PLAN VIEW
NTS

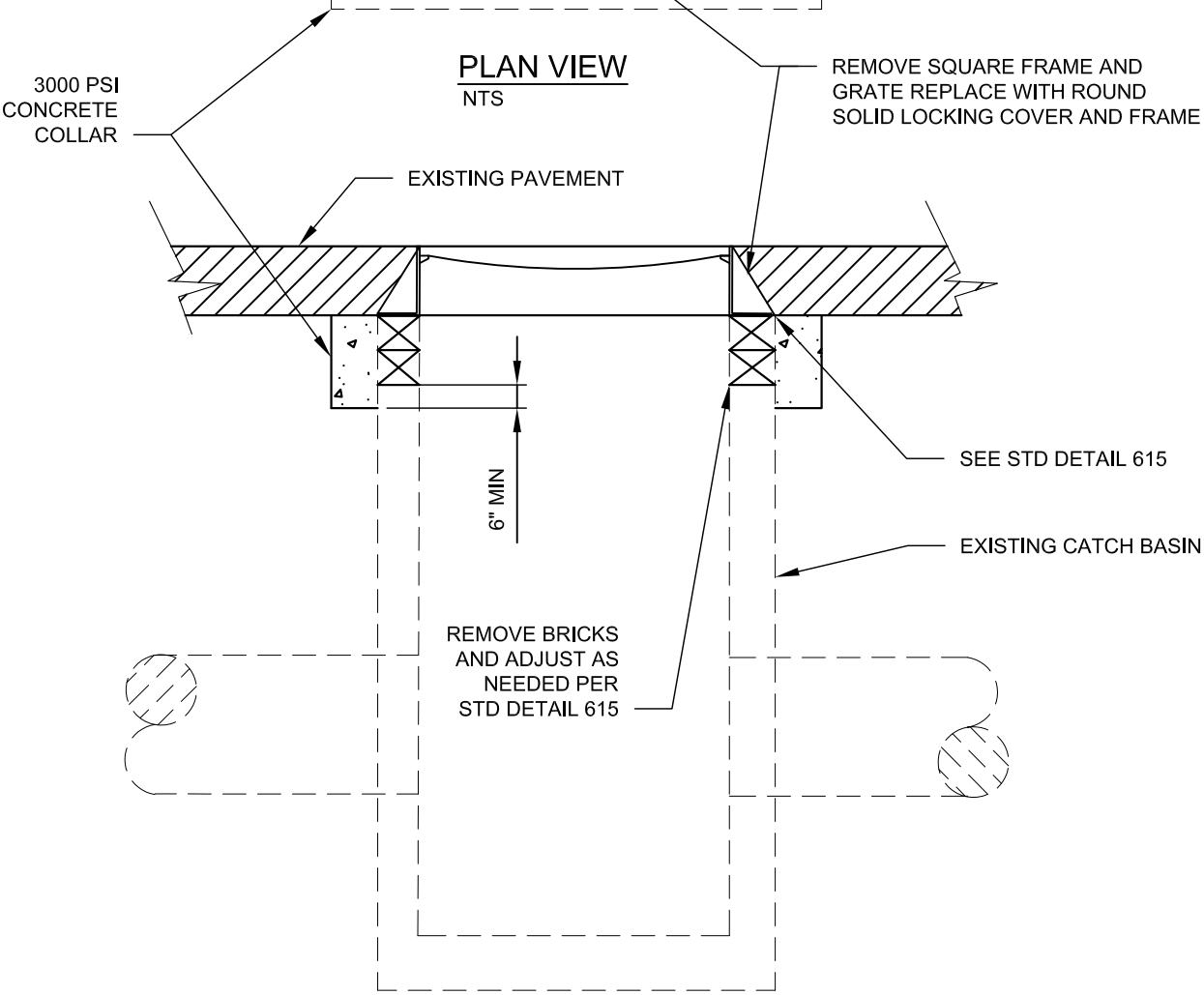

PROFILE VIEW
NTS

CITY OF REDMOND, WASHINGTON			STANDARD DETAILS
APPROVED BY: RON GRANT CITY ENGINEER			**REPLACE FRAME & GRATE WITH RING & COVER**
REVISION DATE: MARCH 01, 2012			FILE NAME: SD631.DWG / DETAIL NUMBER: **631**

DRAWN BY: MARK SUJKA

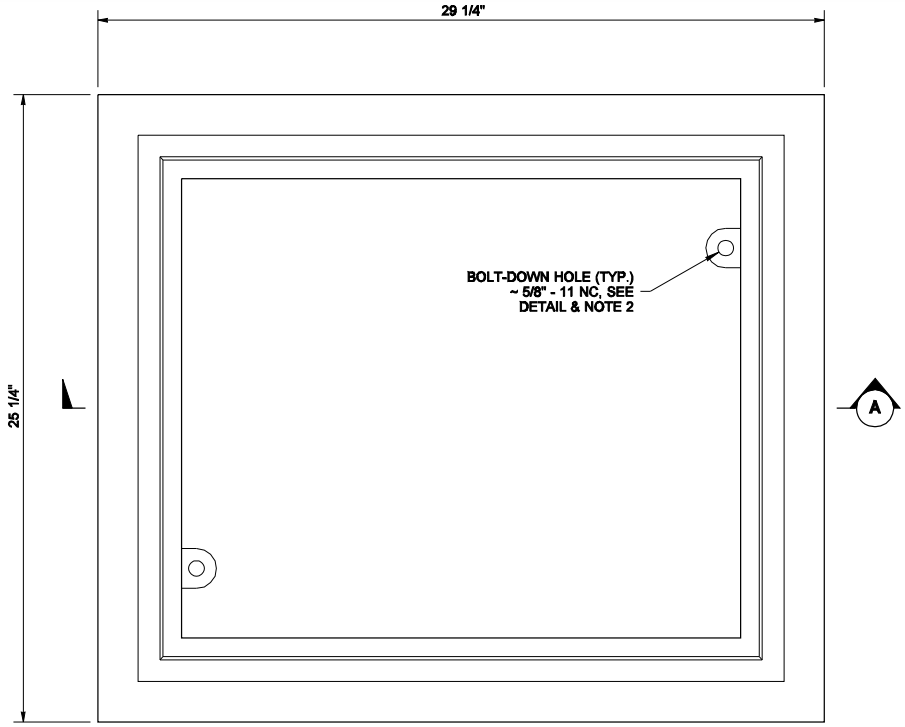

TOP

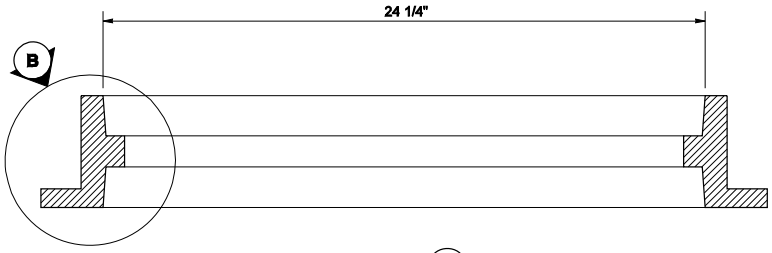

SECTION A

NOTES

1. This frame is designed to accommodate 20" × 24" grates or covers as shown on Standard Plans B-30.20, B-30.30, B-30.40 and B-30.50.
2. When bolt-down grates or covers are specified in the Contract, provide two holes in the frame that are vertically aligned with the grate or cover slots. Tap each hole to accept a 5/8" - 11 NC × 2" allen head cap screw. Location of bolt down holes varies among different manufacturers.
3. Refer to Standard Specification 9-05.15(2) for additional requirements.

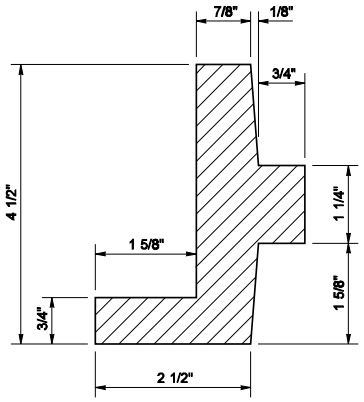

DETAIL B

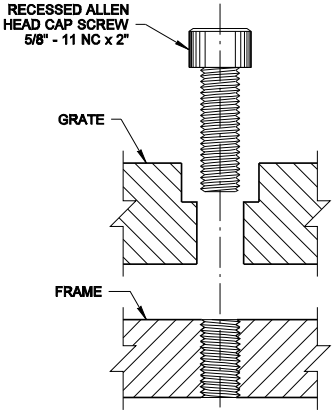

SECTION

BOLT-DOWN DETAIL
SEE NOTE 2

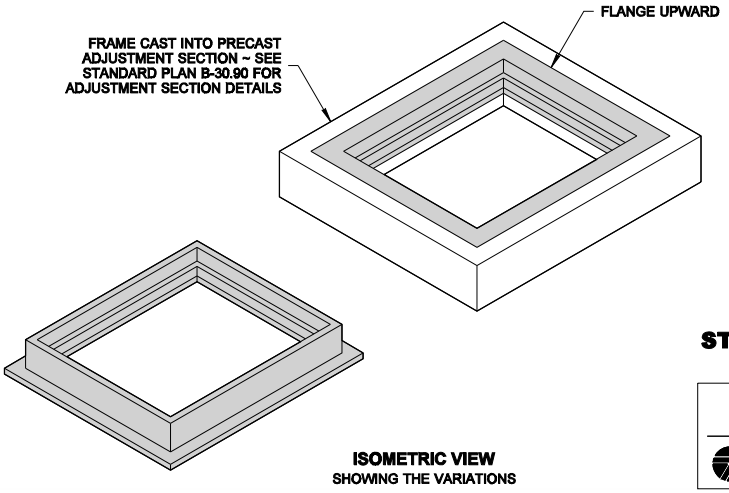

ISOMETRIC VIEW
SHOWING THE VARIATIONS

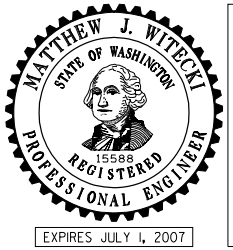

NOTE: THIS PLAN IS NOT A LEGAL ENGINEERING DOCUMENT BUT AN ELECTRONIC DUPLICATE. THE ORIGINAL, SIGNED BY THE ENGINEER AND APPROVED FOR PUBLICATION, IS KEPT ON FILE AT THE WASHINGTON STATE DEPARTMENT OF TRANSPORTATION. A COPY MAY BE OBTAINED UPON REQUEST.

RECTANGULAR FRAME (REVERSIBLE)

STANDARD PLAN B-30.10-00

SHEET 1 OF 1 SHEET

APPROVED FOR PUBLICATION

Harold J. Peterfeso — STATE DESIGN ENGINEER — *06-08-06* — DATE

Washington State Department of Transportation

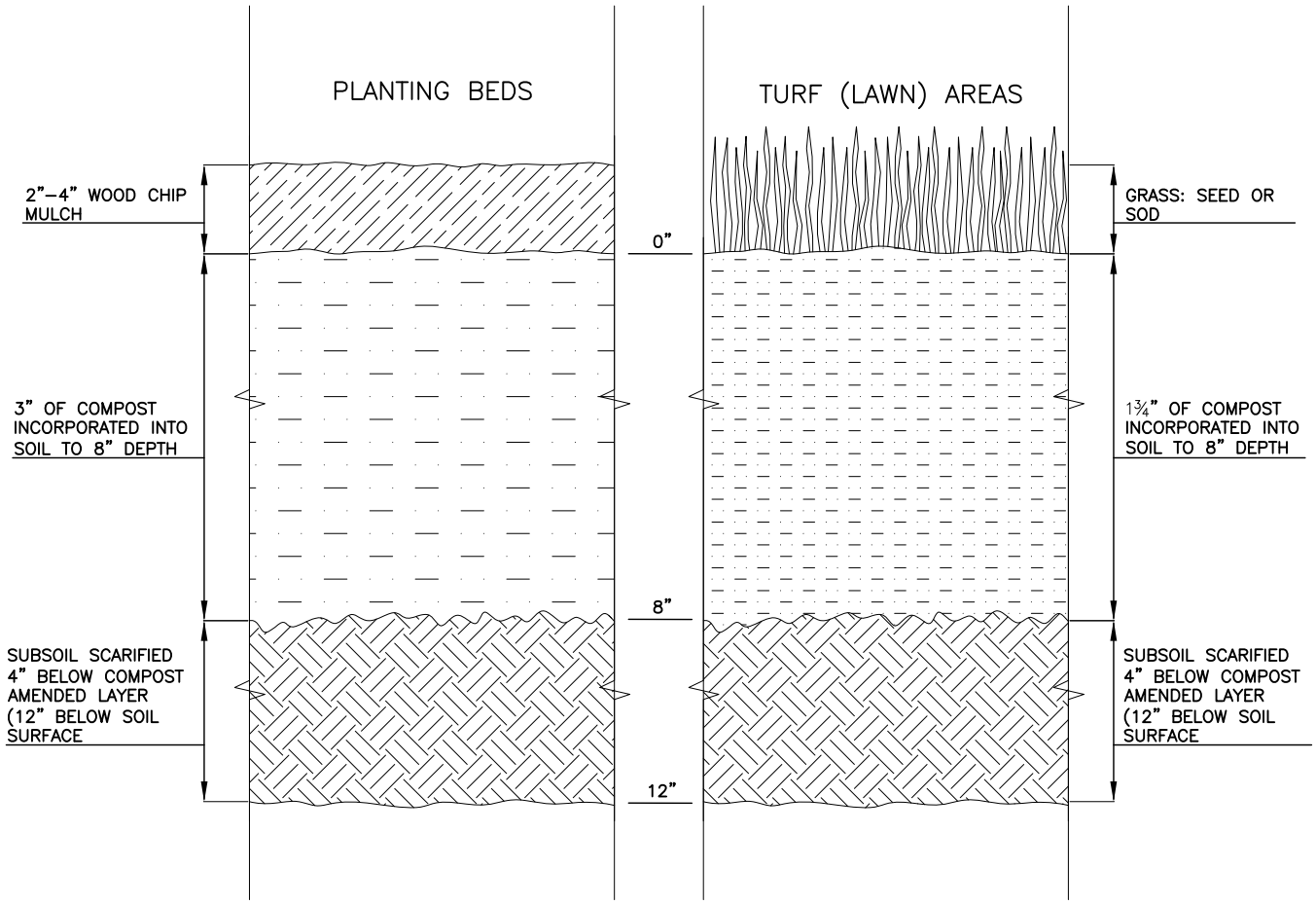

NOTES:

1. ALL SOIL AREAS DISTURBED OR COMPACTED DURING CONSTRUCTION, AND NOT COVERED BY BUILDINGS OR PAVEMENT, SHALL BE AMENDED WITH COMPOST TO A MINIMUM 8" DEPTH, AND SUBSOIL SCARIFIED 4" BELOW THAT COMPOST–AMENDED LAYER, FOR A FINISHED 12" OF UNCOMPACTED DEPTH IN ALL LANDSCAPE AREAS.

2. PLANTING BED AND TURF AREA SOIL PREPARATION ARE THE SAME, EXCEPT FOR AMOUNT OF COMPOST AMENDMENT, AND MULCH ADDED TO PLANTING BEDS.

3. COMPOST SHALL BE TILLED IN TO 8 INCH DEPTH INTO EXISTING SOIL, OR PLACE 8 INCHES OF COMPOST–AMENDED SOIL, PER SOIL SPECIFICATION. SUBSOIL SHALL BE SCARIFIED (LOOSENED) 4 INCHES BELOW AMENDED LAYER, TO PRODUCE 12–INCH DEPTH OF UN–COMPACTED SOIL, EXCEPT WHERE SCARIFICATION WOULD DAMAGE TREE ROOTS.

4. TURF AREAS SHALL RECEIVE 1.75 INCHES OF COMPOST TILLED IN TO 8–INCH DEPTH, OR PLACE 8" OF IMPORTED SOIL CONTAINING 20–25% COMPOST BY VOLUME. THEN PLANT GRASS SEED OR SOD PER SPECIFICATION.

5. PLANTING BEDS SHALL RECEIVE 3 INCHES OF COMPOST TILLED IN TO 8–INCH DEPTH, OR PLACE 8" OF IMPORTED SOIL CONTAINING 35–40% COMPOST BY VOLUME. MULCH AFTER PLANTING, WITH 2–4 INCHES OF ARBORIST WOOD CHIP MULCH OR APPROVED EQUAL.

6. REFER TO CITY OF REDMOND STANADARD SPECIFICATIONS: 9–14.1 PLANTING SOIL AND TURF AREA SOIL, ARBORIST WOOD CHIP MULCH, AND COMPOSTED MATERIAL (COMPOST).

SOIL AMENDMENT AND DEPTH

NTS

CITY OF REDMOND, WASHINGTON	RONALD D. GRANT STATE OF WASHINGTON 22521 REGISTERED PROFESSIONAL ENGINEER	CityofRedmond WASHINGTON	STANDARD DETAILS
APPROVED BY: RON GRANT CITY ENGINEER			**SOIL AMENDMENT AND DEPTH**
REVISION DATE: MARCH 01, 2011			FILE NAME: SD632.DWG / DETAIL NUMBER: **632**

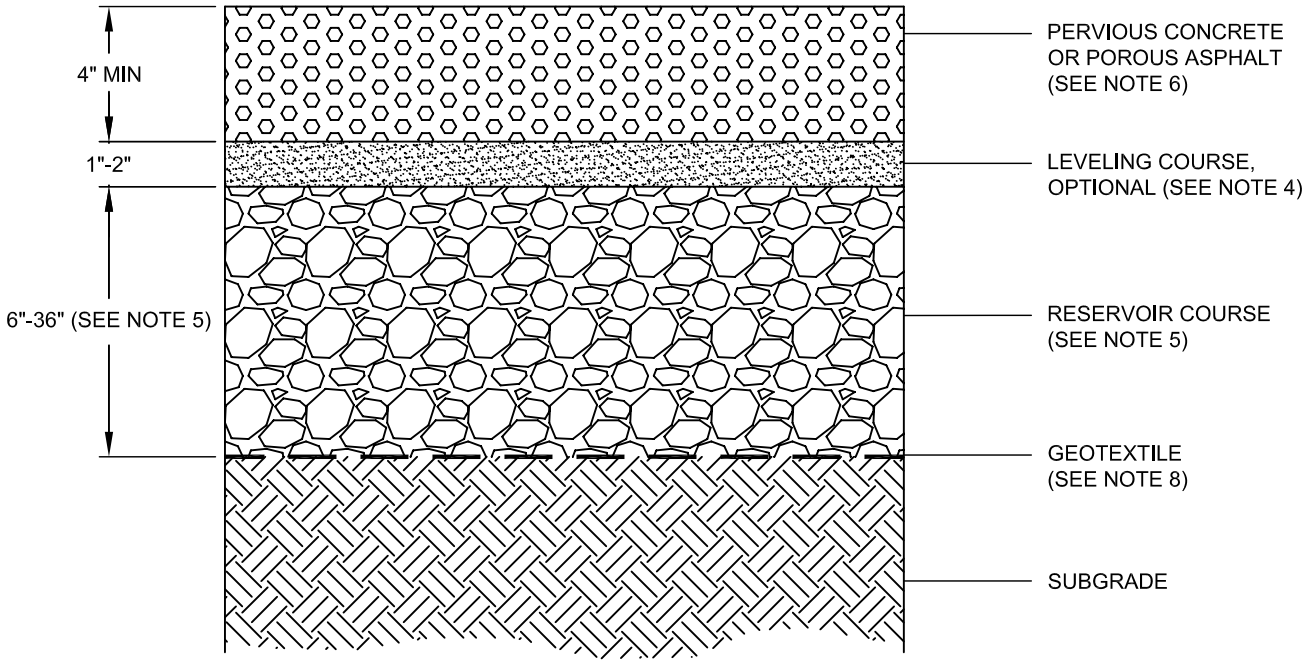

NOTES:

1. PERMEABLE PAVEMENT WITHIN CITY RIGHT-OF-WAY REQUIRES SPECIFIC APPROVAL BY THE STORMWATER ENGINEER. THESE GUIDELINES PROVIDE A MINIMUM DEPTH FOR THE HYDROLOGIC PERFORMANCE. THE STRUCTURAL CAPACITY OF PAVEMENT SECTIONS WHEN SUBJECT TO VEHICULAR LOADS DEPENDS ON SEVERAL FACTORS AND MUST BE DESIGNED BY A LICENSED PROFESSIONAL ENGINEER.
2. LONGITUDINAL SLOPE, 0 TO 5% MAX FOR POROUS ASPHALT, 6% MAX FOR PERVIOUS CONCRETE.
3. USE CHECK DAM OR OTHER METHODS TO MAXIMIZE PONDING IN THE SUBSURFACE FOR LONGITUDINAL SLOPES EXCEEDING 2%. SEE STANDARD DETAIL 647.
4. LEVELING COURSE MATERIALS: GRAVEL BACKFILL FOR WALLS PER SPEC 9-03.12(2)
5. RESERVOIR COURSE MINIMUM DEPTH OF 6" WITHOUT UNDERDRAIN, 22" MINIMUM WITH UNDERDRAIN. PERMEABLE BALLAST PER SPEC 9-03.9(2)
6. PERVIOUS CONCRETE MUST BE INSTALLED BY A CERTIFIED PERVIOUS CONCRETE INSTALLER. POROUS ASPHALT MUST BE INSTALLED BY AN EXPERIENCED POROUS ASPHALT INSTALLER. (NRMCA OR EQUIVALENT).
7. PERMEABLE PAVEMENTS SHALL NOT BE USED FOR POLLUTION GENERATING SURFACES (SURFACES SUBJECT TO REGULAR VEHICLE TRAFFIC).
8. GEOTEXTILE PER SPEC 9-33.2(1) TABLE 3, SOIL STABILIZATION, NONWOVEN. INSPECTOR MAY WAIVE GEOTEXTILE DEPENDING ON SUBGRADE.

CITY OF REDMOND, WASHINGTON	RONALD D. GRANT STATE OF WASHINGTON 22521 REGISTERED PROFESSIONAL ENGINEER	CityofRedmond WASHINGTON	STANDARD DETAILS
APPROVED BY: RON GRANT CITY ENGINEER			**PERMEABLE PAVEMENT SECTION**
REVISION DATE: MARCH 01, 2012			FILE NAME: SD643.DWG / DETAIL NUMBER: **643**

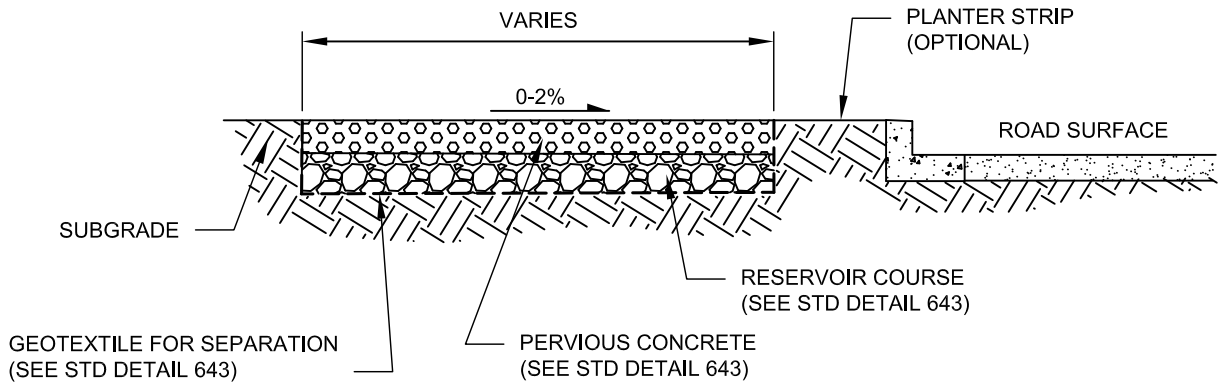

PERVIOUS CONCRETE SIDEWALK ADJACENT TO CURB

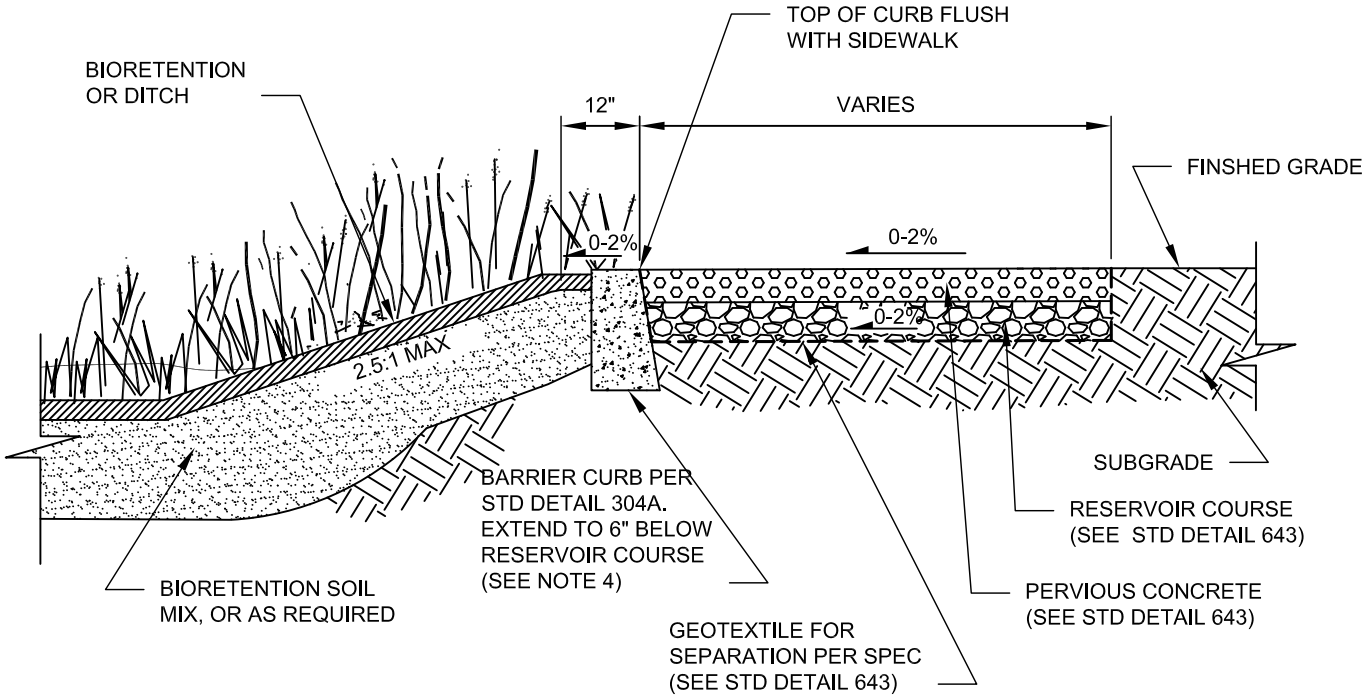

ADJACENT TO BIORETENTION OR DITCH PERVIOUS CONCRETE SIDEWALK

NTS

NOTES:

1. ROUGH GRADE DITCH OR BIORETENTION FIRST.
2. SUBGRADE SHOULD NOT BE COMPACTED.
3. COVER TO PROTECT SURFACE UNTIL FINAL LANDSCAPING IS COMPLETE.
4. INSPECTOR MAY WAIVE BARRIER CURB DEPENDING ON SITE CONDITIONS.

CITY OF REDMOND, WASHINGTON			STANDARD DETAILS
APPROVED BY: RON GRANT CITY ENGINEER			**PERVIOUS CONCRETE SIDEWALK**
REVISION DATE: MARCH 01, 2012			FILE NAME: SD646.DWG / DETAIL NUMBER: **646**

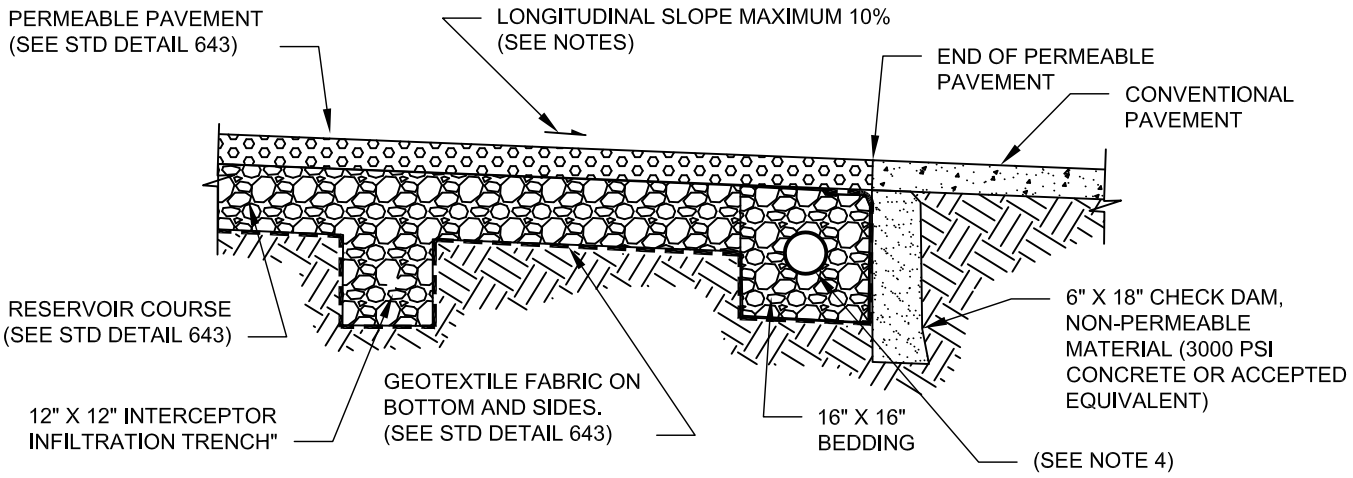

INTERCEPTOR INFILTRATION TRENCH

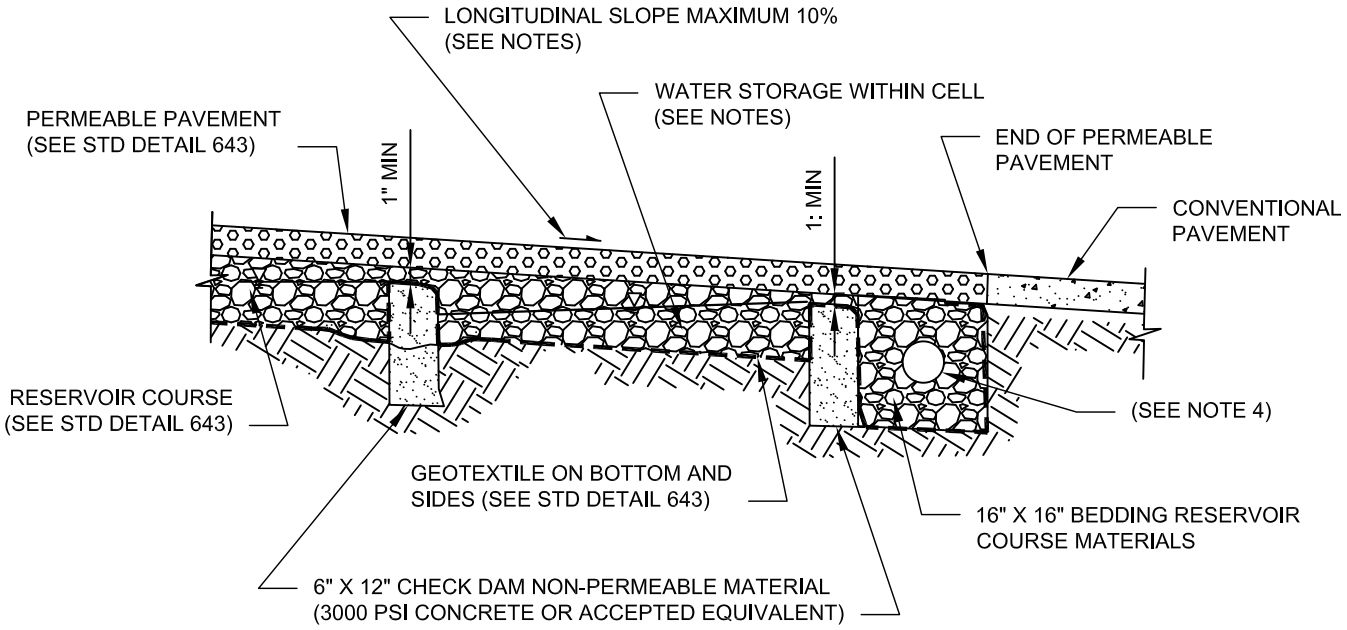

CHECK DAM

NOTES:

1. CHECK DAM OR INTERCEPTOR REQUIRED FOR LONGITUDINAL SLOPES > 2%.
2. SPACE CHECK DAMS BASED ON SLOPE TO ACHIEVE DESIGN AVERAGE PONDING DEPTH BEFORE OVERTOPPING DAM.
3. CALCULATE STORAGE VOLUME BETWEEN CHECK DAMS BASED ON CHECK DAM HEIGHT AND SLOPE FOR MODELING.
4. 6" PVC PERF PIPE WITH CLEANOUTS AND CONNECTION TO STORM, SIMILAR TO STD DETAIL 630.

CITY OF REDMOND, WASHINGTON			STANDARD DETAILS
APPROVED BY: RON GRANT CITY ENGINEER			**PERMEABLE PAVEMENT ON SLOPES**
REVISION DATE: MARCH 01, 2012			FILE NAME: SD647.DWG / DETAIL NUMBER: **647**

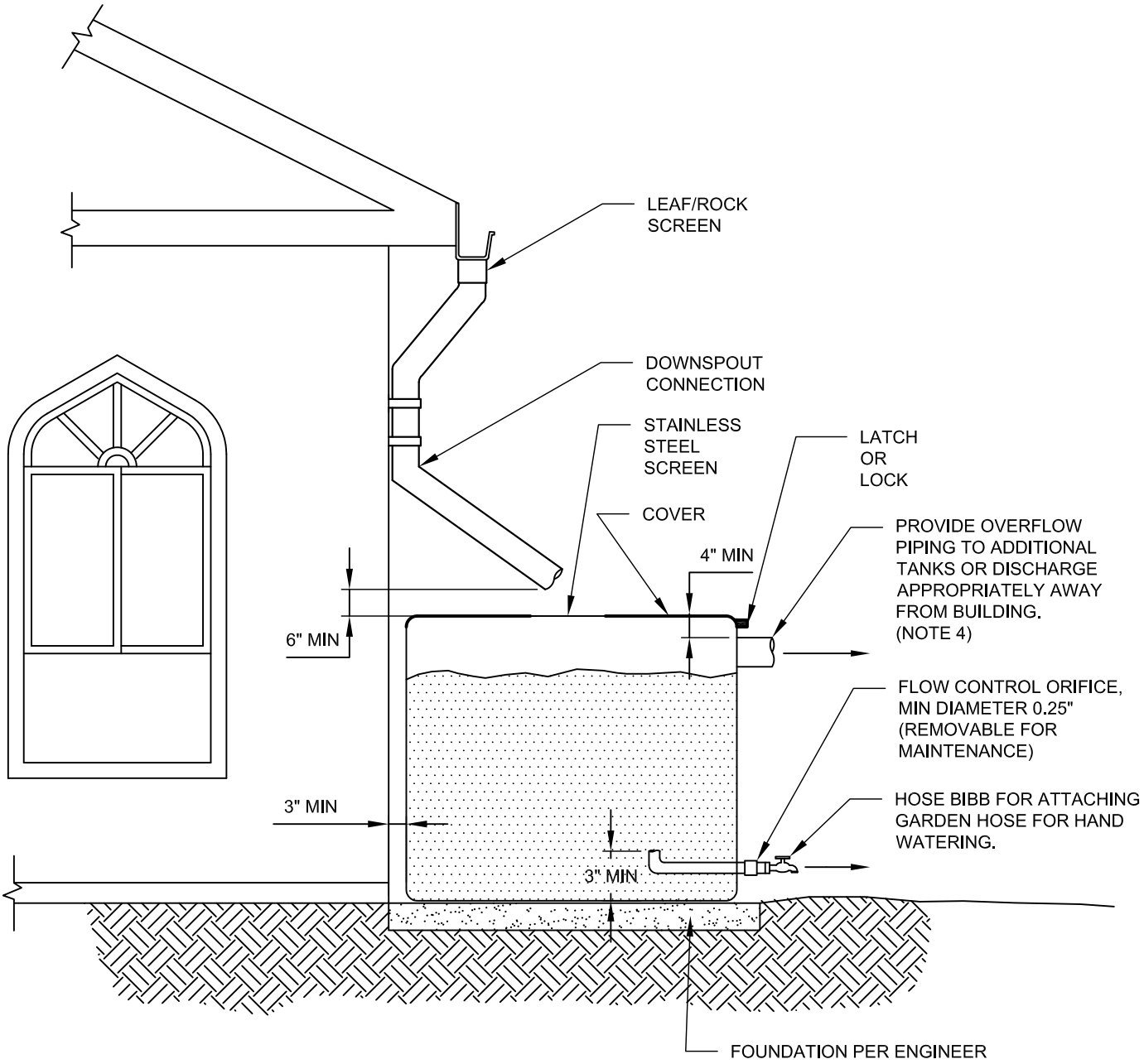

NOTES:

1. ELECTRICAL PERMIT REQUIRED IF WATER PUMP IS TO BE INSTALLED.
2. ENGINEERING DESIGN IS REQUIRED FOR CISTERNS GREATER THAN 60 GALLONS OR FOR BELOW GROUND SYSTEMS.
3. THERE SHALL BE NO CONNECTION BETWEEN RAIN HARVESTING SYSTEM AND POTABLE WATER SUPPLY.
4. THE OWNER IS RESPONSIBLE FOR ENSURING SAFE DISCHARGE OF OVERFLOWS WITHOUT CONCENTRATING FLOWS TO CAUSE EROSION OR FLOODING.

CITY OF REDMOND, WASHINGTON			STANDARD DETAILS
APPROVED BY: RON GRANT CITY ENGINEER			**ROOF RAIN HARVESTING**
REVISION DATE: MARCH 01, 2012		CityofRedmond WASHINGTON	FILE NAME: SD650.DWG / DETAIL NUMBER: **650**